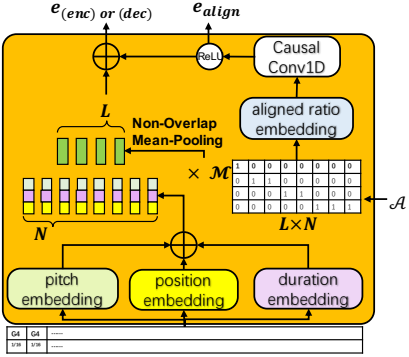

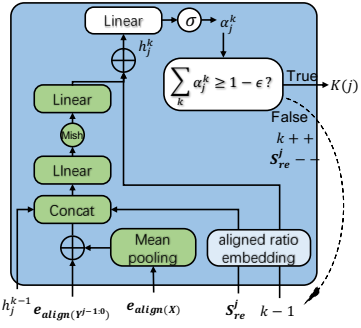

	A4	A4	G4	F4
	$\frac{1}{16}$	$\frac{1}{16}$	$\frac{1}{16}$	$\frac{1}{16}$
k	1	2	3	4
α_j^k	**0.2**	**0.1**	**0.1**	0.7
$\geq 1-\epsilon$	No	No	No	Yes
$R(j)$	-	-	-	**0.6**
4 notes for 珍				