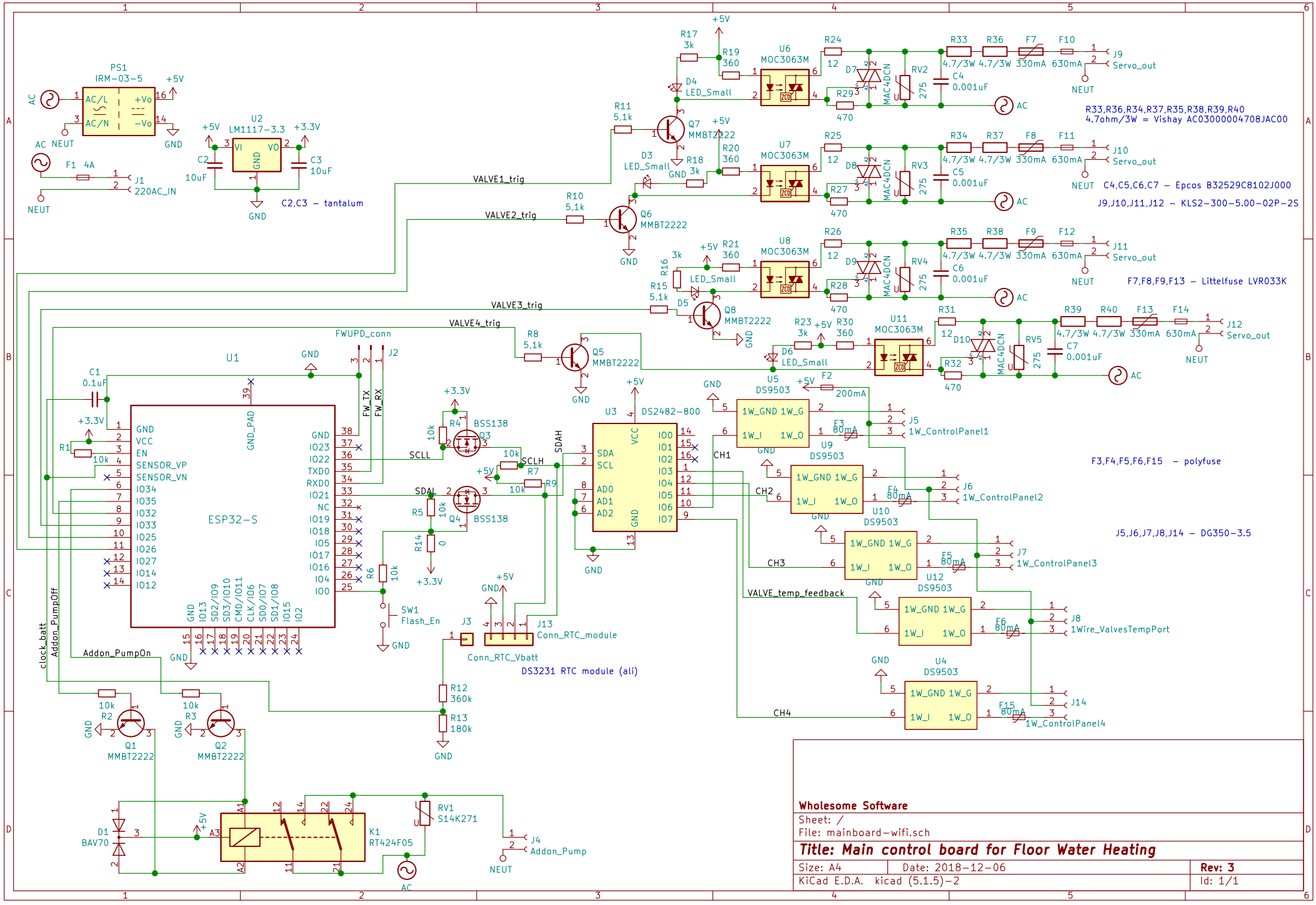

Wholesome Software

Sheet: /

File: mainboard-wifi.sch

Title: Main control board for Floor Water Heating

Size: A4	Date: 2018-12-06	**Rev: 3**
KiCad E.D.A. kicad (5.1.5)-2		Id: 1/1