Design and Optimization of B-747 Autopilot

—

Muhammad Abdelsallam 201801356
Pansy Helmy 201-801-426
Mohamed Hosni 201-802-190

University of Science and Technology - Zewail City
SPC 409 Flight Dynamics and Control

Dr. Mohannad Draz

Eng. Mahmoud ElQuolaly

Table of Contents

Table of Contents **1**

Introduction **3**

Aircraft Modeling (Ayman) **4**

Aircraft parameters and flight condition. 4

Longitudinal Flight Dynamics **5**

Non-dimensional stability derivatives 5

Longitudinal State-Space Model 6

Pole Placement In Case Of Insatiability 7

Longitudinal Modes 8

The Short Period mode 8

The Long Period mode 9

Full Model Characteristics 9

Eigenvalues & Eigenvectors 9

Poles 10

Undamped natural frequency n & Damping ratio 10

Settling time 10

Modes Characteristics 11

The Short Mode 12

Undamped natural frequency n & Damping ratio 12

Settling time 12

The Long Mode 13

Undamped natural frequency n & Damping ratio 13

Settling time 13

Modes Approximation Error 13

The Short Mode 14

The Long Mode 14

Full Model Transfer Function 14

Modes Transfer Functions 15

The Short Mode 15

The Long Mode 15

Longitudinal Simulation 15

Full Model 15

Short Mode 16

Long Mode 18

Lateral Flight Dynamics **20**

Non-dimensional stability derivatives 20
Lateral State-Space Model 21
Pole Placement In Case Of Insatiability 22
Lateral Modes 23
The Dutch Rolling mode 24
The Rolling mode 24
The Spiral mode 24
Lateral Model Characteristics 24
Eigenvalues & Eigenvectors 25
Poles 25
Undamped natural frequency n & Damping ratio 26
Settling time 26
Lateral Modes Characteristics 27
The Dutch Rolling Mode 28
Undamped natural frequency n & Damping ratio 28
Settling time 28
The Rolling Mode 29
Undamped natural frequency n & Damping ratio 29
Settling time 29
The Spiral Mode 29
Undamped natural frequency n & Damping ratio 30
Settling time 30
Modes Approx. Error 30
The Dutch Rolling Mode 30
The Rolling Mode 30
The Spiral Mode 31
Lateral Transfer Function 31
Modes Transfer Functions 32
The Dutch Rolling Mode 33
The Rolling Mode 33
The Spiral Mode 34
Longitudinal Simulation 34
Full Model 34
Dutch Rolling Mode 35
Rolling Mode 36
Spiral Mode 38

Longitudinal Autopilots (Pansy) 40

Lateral Autopilots (Hazem) 48

State Space Model (obtained in part C) 48
Autopilot Control Design 49
Lateral State Response 52

References **55**

Introduction

It is required to obtain the dimensional and non-dimensional stability derivatives for an aircraft of our choice from the given documents under a certain flight condition. Then constructing the longitudinal and lateral state-space model for the aircraft linearized equations of motion alongside their different modes state-space model with analyzing them and calculating the modes approximation error. That is followed by the full system and the different modes transfer functions, eigenvalues, eigenvectors, and different modes characteristics (undamped natural frequency, damping ratio, settling time, etc.). Finally, the aircraft states response for step, impulse, initial disturbance, and elevator and throttle inputs.

Secondly, a longitudinal autopilot is required for the aircraft, to control motion in longitudenal plane. It is required to control velocity and altitude. To control attitude, we first need to control pitch angle. This is done by choosing the gains for the pid controller . After this, we get to control altitude from pitch angle through another PID controller. Height was calculated from theta. Finally, we need to control the velocity, to prevent stall of airplane that could result from achieving the required pitch angle such that we achieve zero change in veocity. This is done also by choosing the gains for the PID controller.

Finally, a lateral autopilot is to be designed for the aircraft, It is required to control the motion of the airplane in the lateral and directional planes, achieving the coordinated turn by controlling the ailerons and rudder, in which the turning maneuver by the ailerons and coordinating the turn by the rudder shall be tackled, we will choose a suitable controller gain for the system to achieve the best state response and performance, and finally, show the full lateral states response before and after using the designed controller.

Aircraft Modeling (Ayman)

Aircraft parameters and flight condition.

The chosen aircraft is **B-747** and its data were taken for **the first flight condition** from NASA CR-2144--Heffley--Aircraft Handling Qualities Data report. The needed data were extracted and put into an excel file to be imported into Matlab workspace.

	A	B	C	D	E	F	G	H
1	w	564032						
2	g	32.2						
3	s	5500						
4	b	195.68						
5	c	27.31						
6	h	0						
7	M	0.198						
8	V_tot	221						
9	CG	0.25						
10	Ix	14200000						
11	Iy	32300000						
12	Iz	45400000						
13	Ixz	870050						
14	Ixy	0						
15	Iyz	0						
16	Alpha	0.148353						
17	q	58.1						

Flight

18	u	218.5725
19	w	32.66588
20	v	0
21	Xu	-0.209
22	Zu	-0.202
23	Mu	0.000117
24	Xw	0.122
25	Zw	-0.512
26	Mw	-0.0177
27	Xq	0
28	Zq	-6.22
29	Mq	-0.357
30	XDE	0.959
31	ZDE	-6.42
32	MDE	-0.378
33	XDTH	0.000057
34	ZDTH	-2.5E-06
35	MDTH	3.1E-07

Long

36	Yv	-0.089
37	Lv	-0.00441
38	Nv	-0.00075
39	Yp	0
40	Lp'	-0.975
41	Np'	-0.166
42	Yr	0
43	Lr'	0.327
44	Nr'	-0.217
45	YCA	0
46	L'CA	0.227
47	N'CA	0.0264
48	YCR	0.0148
49	L'CR	6.36E-02
50	N'CR	-1.51E-01

Lateral

Longitudinal Flight Dynamics

Firstly the aircraft data were imported to the Matlab workspace.

Non-dimensional stability derivatives

The Non-dimensional stability derivatives are easily evaluated as

	X	Z	M
u	$X_u = \frac{q_\infty S}{m U_0}\left[2C_{X_0} + C_{X_u}\right]$	$Z_u = \frac{q_\infty S}{m U_0}\left[2C_{Z_0} + C_{Z_u}\right]$	$M_u = \frac{q_\infty S c}{I_{yy} U_0} C_{m_u}$
w	$X_w = \frac{q_\infty S}{m U_0} C_{X_\alpha}$	$Z_w = \frac{q_\infty S}{m U_0} C_{Z_\alpha}$	$M_w = \frac{q_\infty S c}{I_{yy} U_0} C_{m_\alpha}$
$\dot{w}$	$X_{\dot{w}} = \frac{q S c}{2 m U_0^2} C_{X_{\dot{\alpha}}}$	$Z_{\dot{w}} = \frac{q S c}{2 m U_0^2} C_{Z_{\dot{\alpha}}}$	$M_{\dot{w}} = \frac{q S c^2}{2 m U_0^2} C_{m_{\dot{\alpha}}}$
q	$X_q = \frac{q S c}{2 m U_0} C_{X_{\dot{q}}}$	$Z_q = \frac{q S c}{2 m U_0} C_{Z_{\dot{q}}}$	$M_q = \frac{q S c^2}{2 I_{yy} U_0} C_{m_{\dot{q}}}$
δ	$X_\delta = \frac{q S}{m} C_\delta$	$Z_\delta = \frac{q S}{m} C_\delta$	$M_\delta = \frac{q S c}{I_{yy}} C_\delta$

Which will have the values of

Cme	-1.3991
Cmq	-21.1502
Cmth	1.1474e-06
Cmu	0.0947
Cmw	-14.3189
Cxe	0.0526
Cxq	0
Cxth	3.1245e-06
Cxu	-2.5041
Cxw	1.4617
Cze	-0.3519
Czq	-5.4576
Czth	-1.3649e-07
Czu	-2.4202
Czw	-6.1344

Longitudinal State-Space Model

The longitudinal state-space model for the aircraft linearized equations of motion was constructed as

- 4×4 Longitudinal (Symmetric) Set

$$\begin{pmatrix} \Delta\dot{u} \\ \dot{w} \\ \dot{q} \\ \dot{\theta} \end{pmatrix} = \begin{bmatrix} X_u & X_w & X_q & -g \\ Z_u & Z_w & u_0 + Z_q & 0 \\ M_u & M_w & M_q & 0 \\ 0 & 0 & 1 & 0 \end{bmatrix} \begin{pmatrix} \Delta u \\ w \\ q \\ \theta \end{pmatrix} + \begin{bmatrix} X_{\delta_e} & X_{\delta_T} \\ Z_{\delta_e} & Z_{\delta_T} \\ M_{\delta_e} & M_{\delta_T} \\ 0 & 0 \end{bmatrix} \begin{pmatrix} \Delta\delta_e \\ \Delta\delta_T \end{pmatrix}$$

where $\Delta u = u - u_0$ is the change from the equilibrium condition (cruise). Note that $\alpha = \frac{w}{u_0}$.

The state-space matrices were as

ALongFull

4x4 double

	1	2	3	4
1	-0.2090	0.1220	0	-32.2000
2	-0.2020	-0.5120	212.3525	0
3	1.1700e-04	-0.0177	-0.3570	0
4	0	0	1	0

BLongFull

4x2 double

	1	2
1	0.9590	5.7000e-05
2	-6.4200	-2.4900e-06
3	-0.3780	3.1000e-07
4	0	0

CLongFull

4x4 double

	1	2	3	4
1	1	0	0	0
2	0	1	0	0
3	0	0	1	0
4	0	0	0	1

DLongFull

4x2 double

	1	2
1	0	0
2	0	0
3	0	0
4	0	0

Pole Placement In Case Of Insatiability

In that step, a controller is being designed to stabilize the system in case of any instability in the system since the autopilot PID controller was not able to stabilize the system (mentioned in the lateral autopilot section below)

The block was built as an if statement with the condition of the presence of any positive poles. If there is any, which implies instability in the system, a pole placement procedure is taken to replace the positive poles with other negative poles with the exact magnitude but flipped sign. The procedure taken for

1. Full Model

```
%% Pole Placement In Case Of Insatiability
if (isreal(sqrt(real(PolesFull))))  % enters iff there is a positive pole
    % Full
    PolesFullNew = complex(-abs(real(PolesFull)),imag(PolesFull));
    kFull = place(ALongFull,BLongFull,PolesFullNew);
    ALongFull = ALongFull-BLongFull*kFull;
    LongSSFull = ss(ALongFull,BLongFull,CLongFull,DLongFull);
    LongSSFull.OutputName = {'u';'w';'q';'theta'};
    LongSSFull.InputName = {'De';'Dth'};
```

2. Short Mode

```
% Short Mode
PolesShort = pole(LongSSShort);
PolesShortNew = complex(-abs(real(PolesShort)),imag(PolesShort));
kShort = place(ALongShort,BLongShort,PolesShortNew);
ALongShort = ALongShort-BLongShort*kShort;
LongSSShort = ss(ALongShort,BLongShort,CLongShort,DLongShort);
LongSSShort.OutputName = {'w';'q'};
LongSSShort.InputName = {'De';'Dth'};
```

3. Long Mode

```
% Long Mode
PolesLong = pole(LongSSLong);
PolesLongNew = complex(-abs(real(PolesLong)),imag(PolesLong));
kLong = place(ALongLong,BLongLong,PolesLongNew);
ALongLong = ALongLong-BLongLong*kLong;
LongSSLong = ss(ALongLong,BLongLong,CLongLong,DLongLong);
LongSSLong.OutputName = {'u';'theta'};
LongSSLong.InputName = {'De';'Dth'};
```

Longitudinal Modes

The longitudinal motion has two modes; the short period mode, and the long period mode.

<u>The Short Period mode</u>

The short period mode is a subsystem from the full model which depends on the states w & q only and the two inputs δ_e & δ_{Th}. It was evaluated as

```
% Short Mode
ALongShort = [Zw Zq+u;Mw Mq];
BLongShort = [ZDE ZDTH; MDE MDTH];
CLongShort = eye(2);
DLongShort = zeros(2,2);
LongSSShort = ss(ALongShort,BLongShort,CLongShort,DLongShort);
LongSSShort.OutputName = {'w';'q'};
LongSSShort.InputName = {'De';'Dth'};
```

The Long Period mode

The Long period mode is the other subsystem from the full model that depends on the other two states u & θ and the two inputs δ_e & δ_{Th}. It was evaluated as

```
% Long Mode
ALongLong = [Xu -g;-Zu/(u+Zq) 0];
BLongLong = [XDE XDTH; -ZDE/(u+Zq) -ZDTH/(u+Zq)];
CLongLong = eye(2);
DLongLong = zeros(2,2);
LongSSLong = ss(ALongLong,BLongLong,CLongLong,DLongLong);
LongSSLong.OutputName = {'u';'theta'};
LongSSLong.InputName = {'De';'Dth'};
```

Full Model Characteristics

And the full state-space model characteristics were

1. Eigenvalues & Eigenvectors

eigValuesLongFull

4x4 complex double

	1	2	3	4
1	-0.4365 + 1.9361i	0.0000 + 0.0000i	0.0000 + 0.0000i	0.0000 + 0.0000i
2	0.0000 + 0.0000i	-0.4365 - 1.9361i	0.0000 + 0.0000i	0.0000 + 0.0000i
3	0.0000 + 0.0000i	0.0000 + 0.0000i	-0.1025 + 0.1386i	0.0000 + 0.0000i
4	0.0000 + 0.0000i	0.0000 + 0.0000i	0.0000 + 0.0000i	-0.1025 - 0.1386i

eigVectorsLongFull

4x4 complex double

	1	2	3	4
1	0.0209 + 0.0084i	0.0209 - 0.0084i	0.9999 + 0.0000i	0.9999 + -0.0000i
2	0.9997 + 0.0000i	0.9997 + -0.0000i	-0.0071 - 0.0071i	-0.0071 + 0.0071i
3	0.0004 + 0.0091i	0.0004 - 0.0091i	9.4217e-04 - 1.8344e-05i	9.4217e-04 + 1.8344e-05i
4	0.0044 - 0.0012i	0.0044 + 0.0012i	-0.0033 - 0.0043i	-0.0033 + 0.0043i

2. Poles

PolesFull

4x1 complex double

	1
1	-0.4365 + 1.9361i
2	-0.4365 - 1.9361i
3	-0.1025 + 0.1386i
4	-0.1025 - 0.1386i

3. Undamped natural frequency ω_n & Damping ratio ζ

WnFull

4x1 double

	1
1	0.1724
2	0.1724
3	1.9847
4	1.9847

ZetaFull

4x1 double

	1
1	0.5945
2	0.5945
3	0.2199
4	0.2199

4. Settling time

StepInfoFull | StepInfoFull(1, 1)

StepInfoFull(1, 1)

Field	Value
RiseTime	44.5019
SettlingTime	155.4386
SettlingMin	19.8615
SettlingMax	24.3858
Overshoot	11.2945
Undershoot	0
Peak	24.3858
PeakTime	96

StepInfoFull | StepInfoFull(1, 2)

StepInfoFull(1, 2)

Field	Value
RiseTime	18.5268
SettlingTime	199.5300
SettlingMin	-7.5473e-05
SettlingMax	-4.9255e-05
Overshoot	39.8859
Undershoot	268.8675
Peak	1.4506e-04
PeakTime	29

StepInfoFull | StepInfoFull(2, 1)

StepInfoFull(2, 1)

Field	Value
RiseTime	2.9766
SettlingTime	41.1987
SettlingMin	-31.4393
SettlingMax	-15.9563
Overshoot	48.2238
Undershoot	0
Peak	31.4393
PeakTime	8

StepInfoFull | StepInfoFull(2, 2)

StepInfoFull(2, 2)

Field	Value
RiseTime	3.7124
SettlingTime	121.4269
SettlingMin	1.0723e-05
SettlingMax	2.0336e-05
Overshoot	18.7305
Undershoot	0
Peak	2.0336e-05
PeakTime	9

StepInfoFull | StepInfoFull(3, 1)

StepInfoFull(3, 1)

Field	Value
RiseTime	7.2709e-04
SettlingTime	53.5581
SettlingMin	-0.1527
SettlingMax	0.0488
Overshoot	2.3199e+05
Undershoot	7.4187e+04
Peak	0.1527
PeakTime	5

StepInfoFull | StepInfoFull(3, 2)

StepInfoFull(3, 2)

Field	Value
RiseTime	0.0219
SettlingTime	199.1926
SettlingMin	-1.8290e-08
SettlingMax	1.9742e-07
Overshoot	1.1429e+04
Undershoot	1.0681e+03
Peak	1.9742e-07
PeakTime	21

StepInfoFull | StepInfoFull(4, 1)

StepInfoFull(4, 1)

Field	Value
RiseTime	19.4788
SettlingTime	124.2249
SettlingMin	-0.2190
SettlingMax	-0.1804
Overshoot	13.2767
Undershoot	0
Peak	0.2190
PeakTime	67

StepInfoFull | StepInfoFull(4, 2)

StepInfoFull(4, 2)

Field	Value
RiseTime	52.4304
SettlingTime	163.6219
SettlingMin	1.9885e-06
SettlingMax	2.4089e-06
Overshoot	10.0889
Undershoot	0
Peak	2.4089e-06
PeakTime	105

Modes Characteristics

The Short Mode

1. Undamped natural frequency ω_n & Damping ratio ζ

WnShort

2x1 double

	1
1	1.9853
2	1.9853

ZetaShort

2x1 double

	1
1	0.2189
2	0.2189

2. Settling time

(2 outputs for all four states with each input)

StepInfoShort | StepInfoShort(1, 1)

StepInfoShort(1, 1)

Field	Value
RiseTime	5.7393
SettlingTime	81.5701
SettlingMin	-31.3825
SettlingMax	-15.7685
Overshoot	50.1741
Undershoot	0
Peak	31.3825
PeakTime	16

StepInfoShort | StepInfoShort(1, 2)

StepInfoShort(1, 2)

Field	Value
RiseTime	5.8302
SettlingTime	82.7565
SettlingMin	1.2440e-05
SettlingMax	2.4622e-05
Overshoot	49.8672
Undershoot	0
Peak	2.4622e-05
PeakTime	17

StepInfoShort | StepInfoShort(2, 1)

StepInfoShort(2, 1)

Field	Value
RiseTime	0.4292
SettlingTime	89.4053
SettlingMin	-0.1552
SettlingMax	0.0462
Overshoot	652.6544
Undershoot	224.0121
Peak	0.1552
PeakTime	8

1x1 doul

StepInfoShort | StepInfoShort(2, 2)

StepInfoShort(2, 2)

Field	Value
RiseTime	1.3102
SettlingTime	90.3338
SettlingMin	-2.2096e-10
SettlingMax	1.5647e-07
Overshoot	203.0060
Undershoot	0.4279
Peak	1.5647e-07
PeakTime	9

The Long Mode

1. Undamped natural frequency ω_n & Damping ratio ζ

WnLong

2x1 double

	1
1	0.1750
2	0.1750

ZetaLong

2x1 double

	1
1	0.5971
2	0.5971

2. Settling time

(2 outputs for all four states with each input)

StepInfoLong | StepInfoLong(1, 1)

StepInfoLong(1, 1)

Field	Value
RiseTime	23.6032
SettlingTime	80.0718
SettlingMin	-34.8880
SettlingMax	-28.9925
Overshoot	9.7936
Undershoot	1.3018
Peak	34.8880
PeakTime	54

StepInfoLong | StepInfoLong(1, 2)

StepInfoLong(1, 2)

Field	Value
RiseTime	3.0775
SettlingTime	93.7748
SettlingMin	-2.8757e-05
SettlingMax	-1.0741e-05
Overshoot	144.0930
Undershoot	1.3406e+03
Peak	1.5794e-04
PeakTime	16

StepInfoLong | StepInfoLong(2, 1)

StepInfoLong(2, 1)

Field	Value
RiseTime	17.1479
SettlingTime	67.0878
SettlingMin	0.2134
SettlingMax	0.2698
Overshoot	14.1465
Undershoot	0
Peak	0.2698
PeakTime	39

StepInfoLong | StepInfoLong(2, 2)

StepInfoLong(2, 2)

Field	Value
RiseTime	23.9388
SettlingTime	77.4571
SettlingMin	1.6692e-06
SettlingMax	2.0288e-06
Overshoot	9.6348
Undershoot	0
Peak	2.0288e-06
PeakTime	51

Modes Approximation Error

Evaluating the modes approximation errors as

```
%% Modes Approx. Error
ErorrShort = abs(WnShort-WnFull(3:4))/WnFull(3:4)*100;
ErorrLong = abs(WnLong-WnFull(1:2))/WnFull(1:2)*100;
```

The Short Mode

ErorrShort

2x2 double

	1	2
1	0.0303	
2	0.0303	

So the short mode approximation error is 0.03%

The Long Mode

ErorrLong

2x2 double

	1	2
1	1.5246	
2	1.5246	

So the short mode approximation error is 1.5%

Full Model Transfer Function

```
From input "De" to output...
        0.959 s^3 + 0.05013 s^2 + 5.879 s + 2.573
 u:  ---------------------------------------------
     s^4 + 1.078 s^3 + 4.148 s^2 + 0.8333 s + 0.1171

         -6.42 s^3 - 84.1 s^2 - 17.3 s - 2.483
 w:  ---------------------------------------------
     s^4 + 1.078 s^3 + 4.148 s^2 + 0.8333 s + 0.1171

          -0.378 s^3 - 0.1588 s^2 - 0.02262 s
 q:  ---------------------------------------------
     s^4 + 1.078 s^3 + 4.148 s^2 + 0.8333 s + 0.1171

                 -0.378 s^2 - 0.1588 s - 0.02262
 theta:  ---------------------------------------------
         s^4 + 1.078 s^3 + 4.148 s^2 + 0.8333 s + 0.1171
```

```
From input "Dth" to output...
     5.7e-05 s^3 + 4.923e-05 s^2 + 0.0002226 s - 6.53e-06
 u:  ----------------------------------------------------
       s^4 + 1.078 s^3 + 4.148 s^2 + 0.8333 s + 0.1171

     -2.49e-06 s^3 + 5.291e-05 s^2 + 1.088e-05 s + 2.007e-06
 w:  -------------------------------------------------------
         s^4 + 1.078 s^3 + 4.148 s^2 + 0.8333 s + 0.1171

        3.1e-07 s^3 + 2.743e-07 s^2 + 2.572e-07 s
 q:  ---------------------------------------------
     s^4 + 1.078 s^3 + 4.148 s^2 + 0.8333 s + 0.1171

              3.1e-07 s^2 + 2.743e-07 s + 2.572e-07
 theta:  ---------------------------------------------
         s^4 + 1.078 s^3 + 4.148 s^2 + 0.8333 s + 0.1171
```

Modes Transfer Functions

The Short Mode

```
From input "De" to output...
        -6.42 s - 82.56
 w:  ---------------------
     s^2 + 0.869 s + 3.941

       -0.378 s - 0.0799
 q:  ---------------------
     s^2 + 0.869 s + 3.941
```

```
From input "Dth" to output...
     -2.49e-06 s + 6.494e-05
 w:  -----------------------
      s^2 + 0.869 s + 3.941

     3.1e-07 s + 2.028e-07
 q:  ---------------------
     s^2 + 0.869 s + 3.941
```

The Long Mode

```
From input "De" to output...
        0.959 s - 0.9735
 u:  -----------------------
     s^2 + 0.209 s + 0.03063

          0.03023 s + 0.007231
 theta:  -----------------------
         s^2 + 0.209 s + 0.03063
```

```
From input "Dth" to output...
       5.7e-05 s - 3.776e-07
 u:  -----------------------
     s^2 + 0.209 s + 0.03063

          1.173e-08 s + 5.667e-08
 theta:  -----------------------
         s^2 + 0.209 s + 0.03063
```

Longitudinal Simulation

Full Model

The full model step response

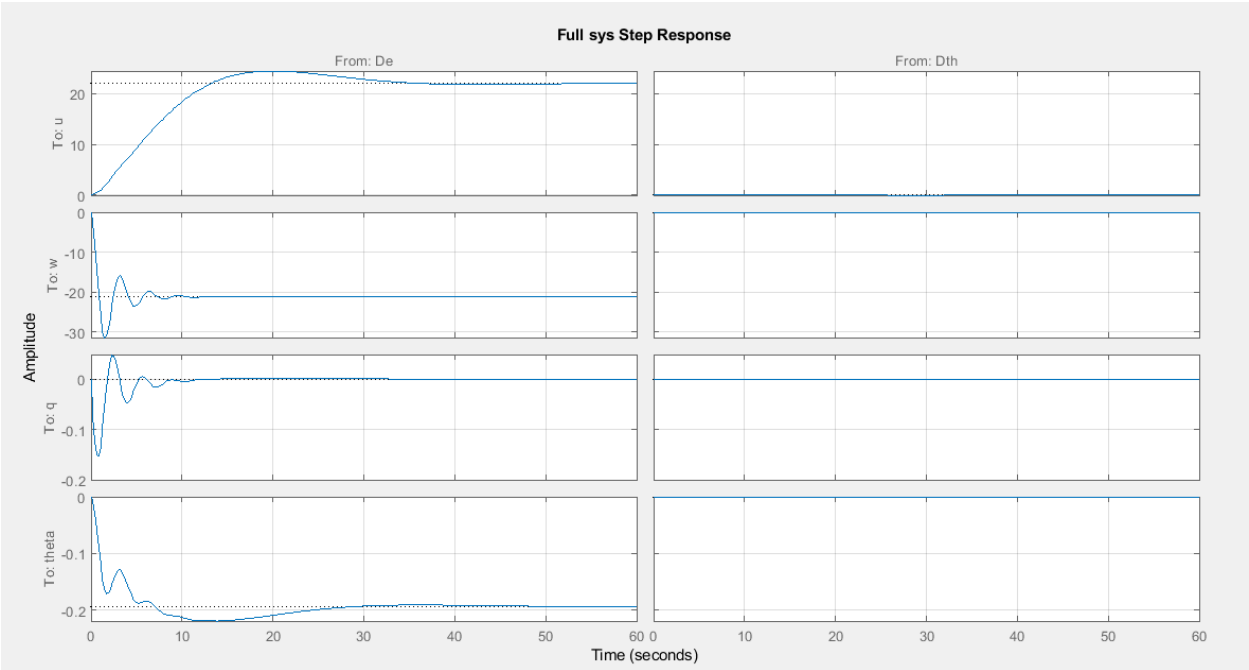

The full model impulse response

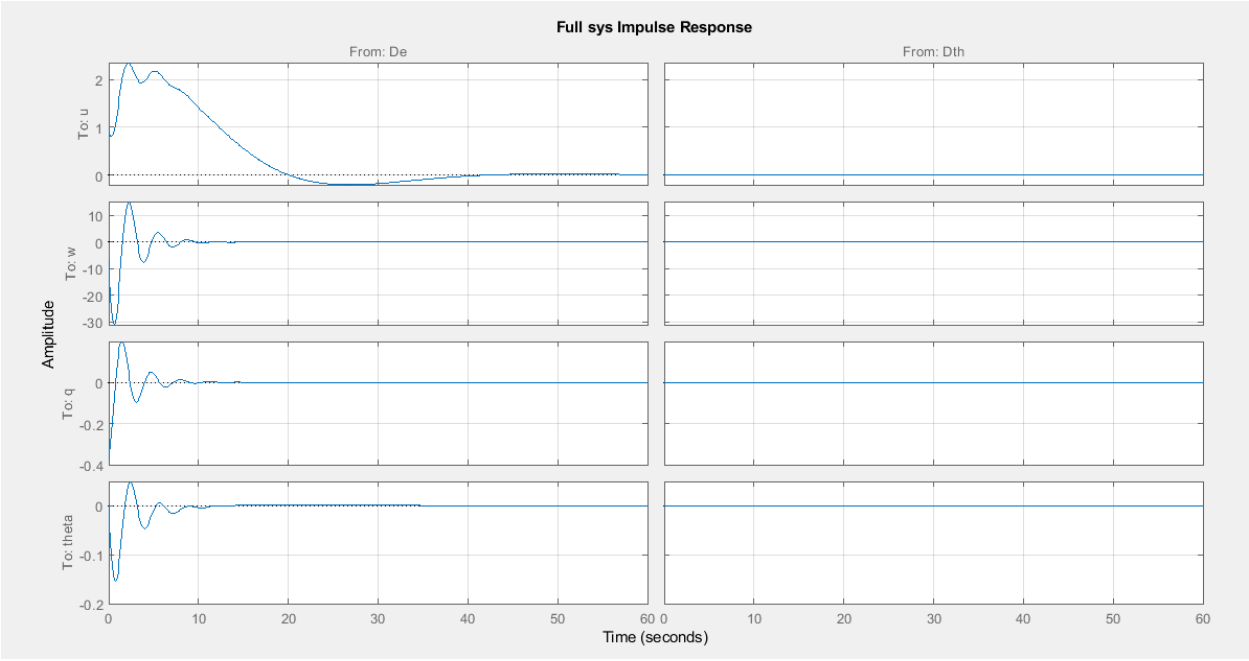

The full model unity initial value response

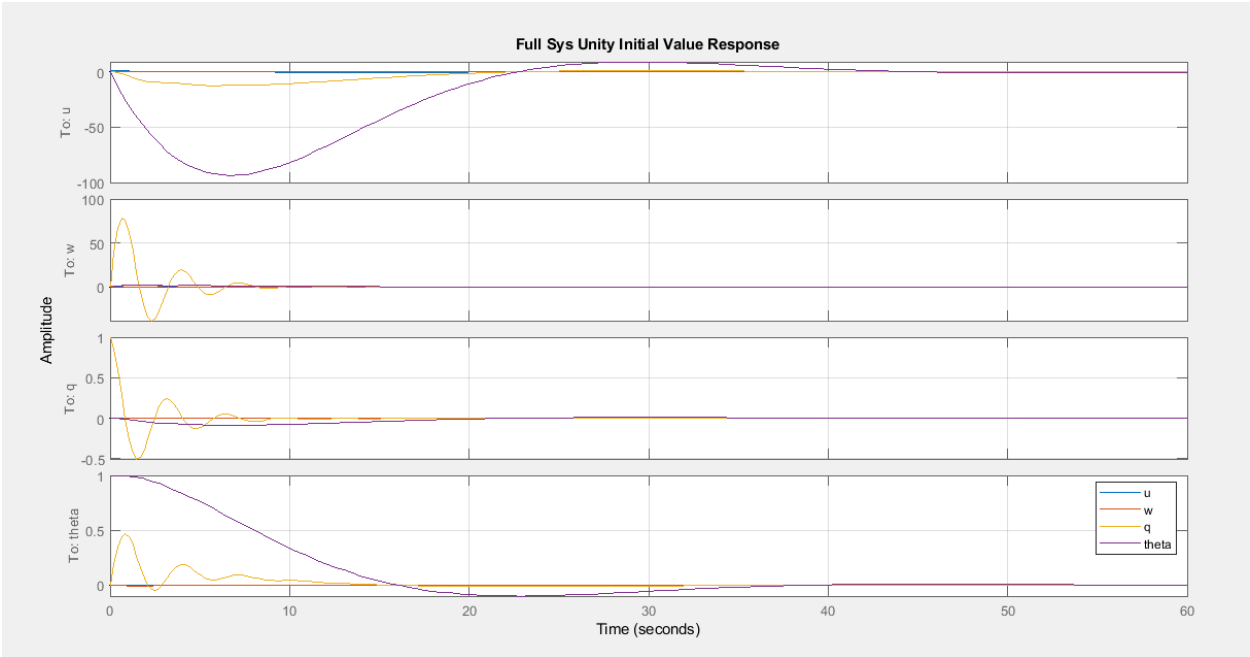

Short Mode

The short mode step response

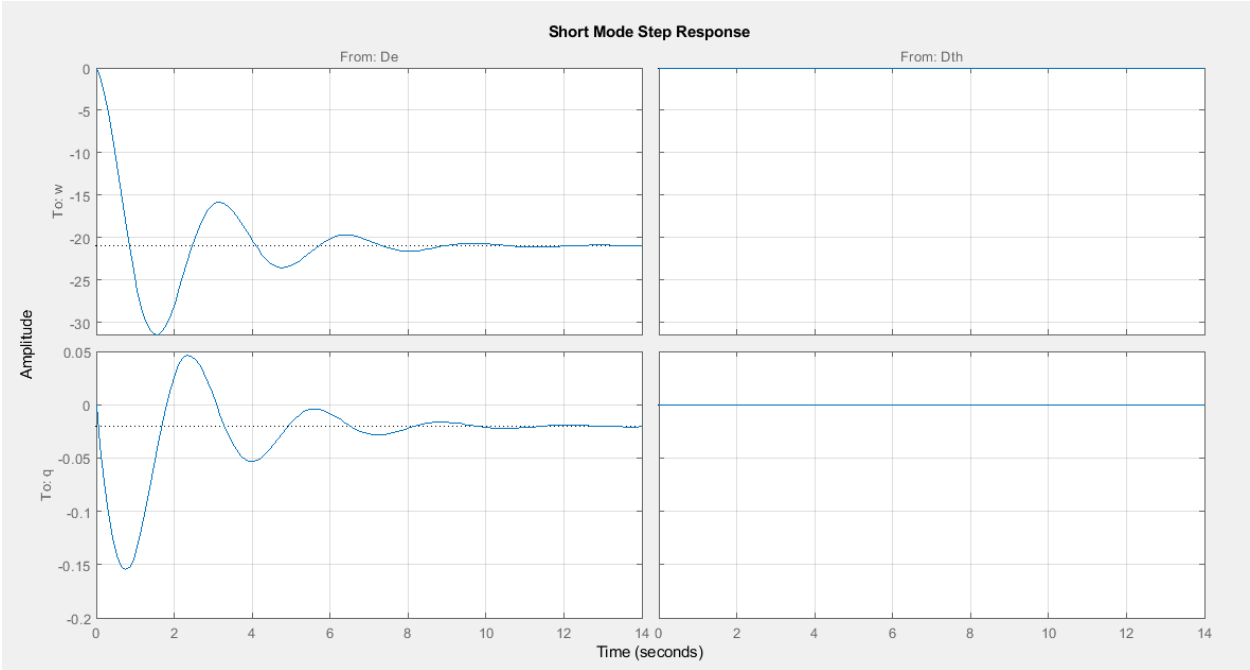

The short mode impulse response

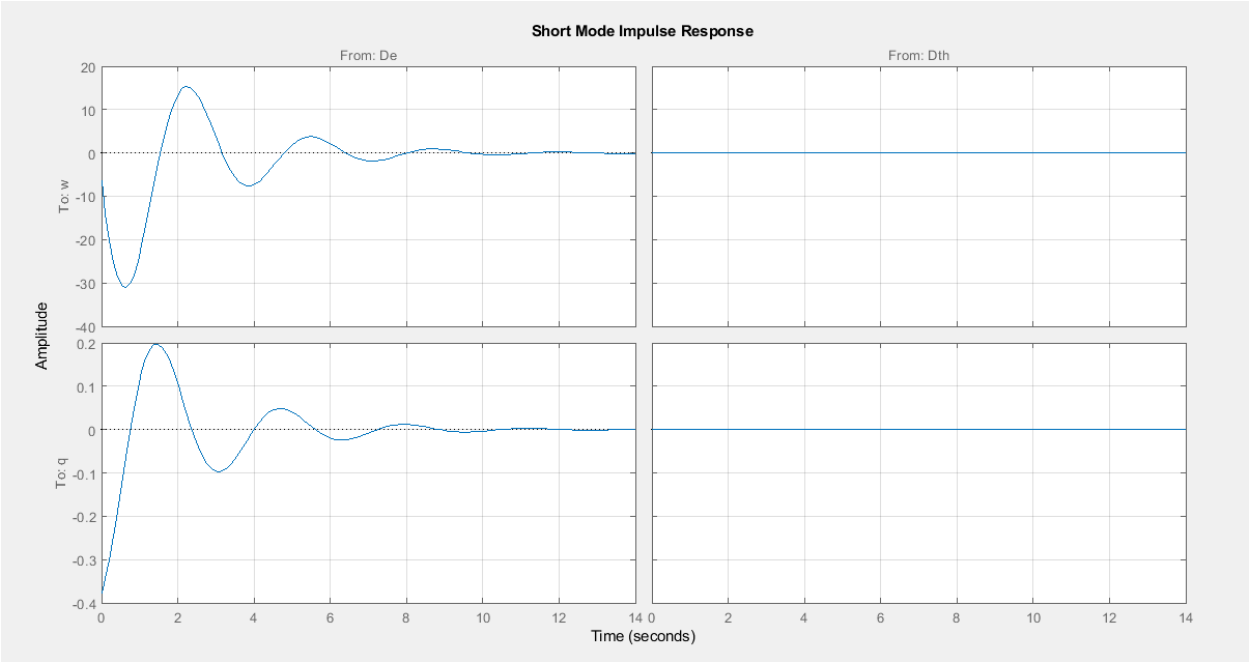

The short mode unity initial value response

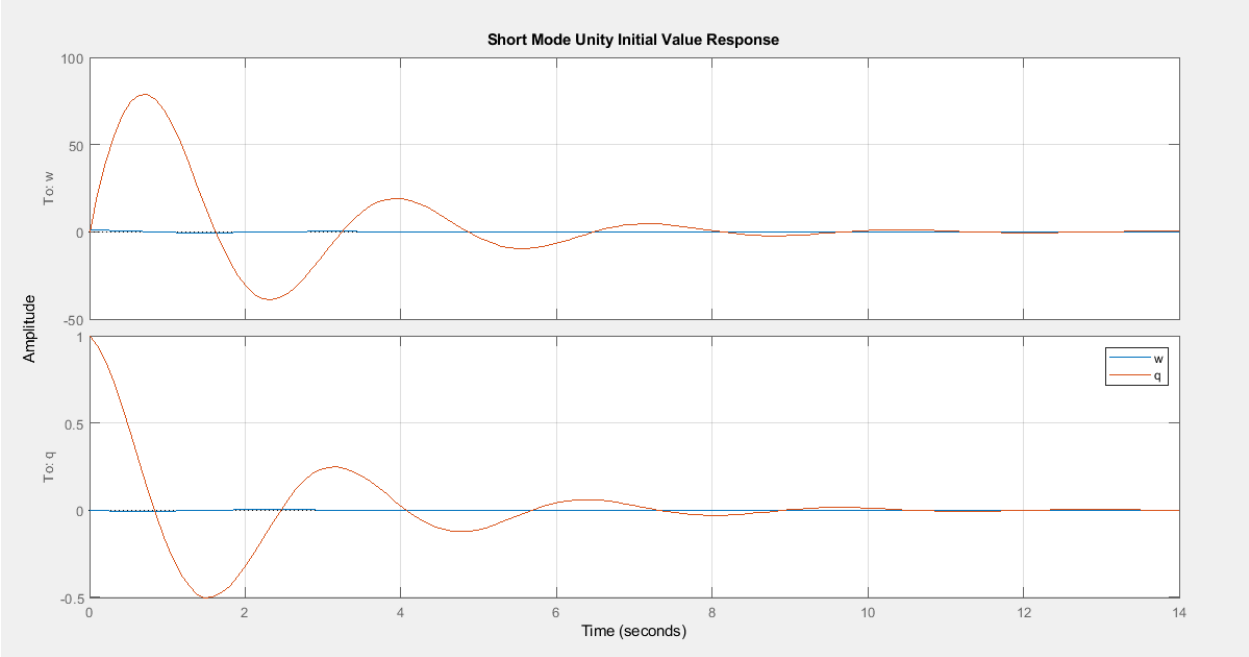

Long Mode

The longmode step response

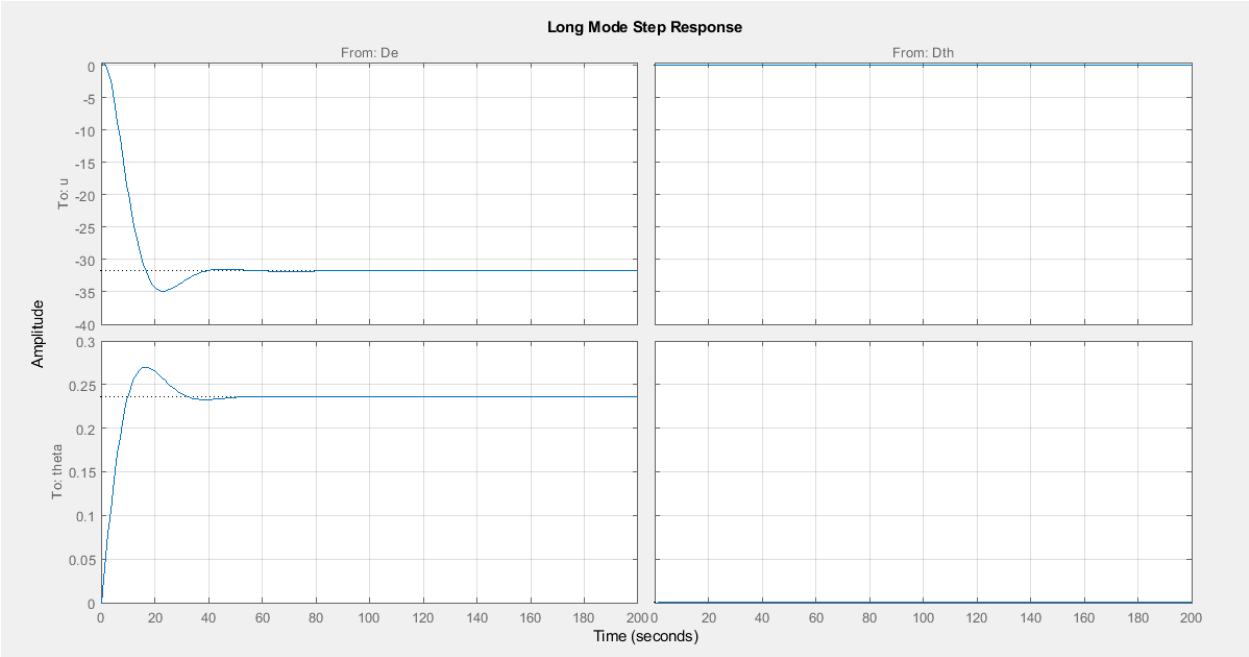

The long mode impulse response

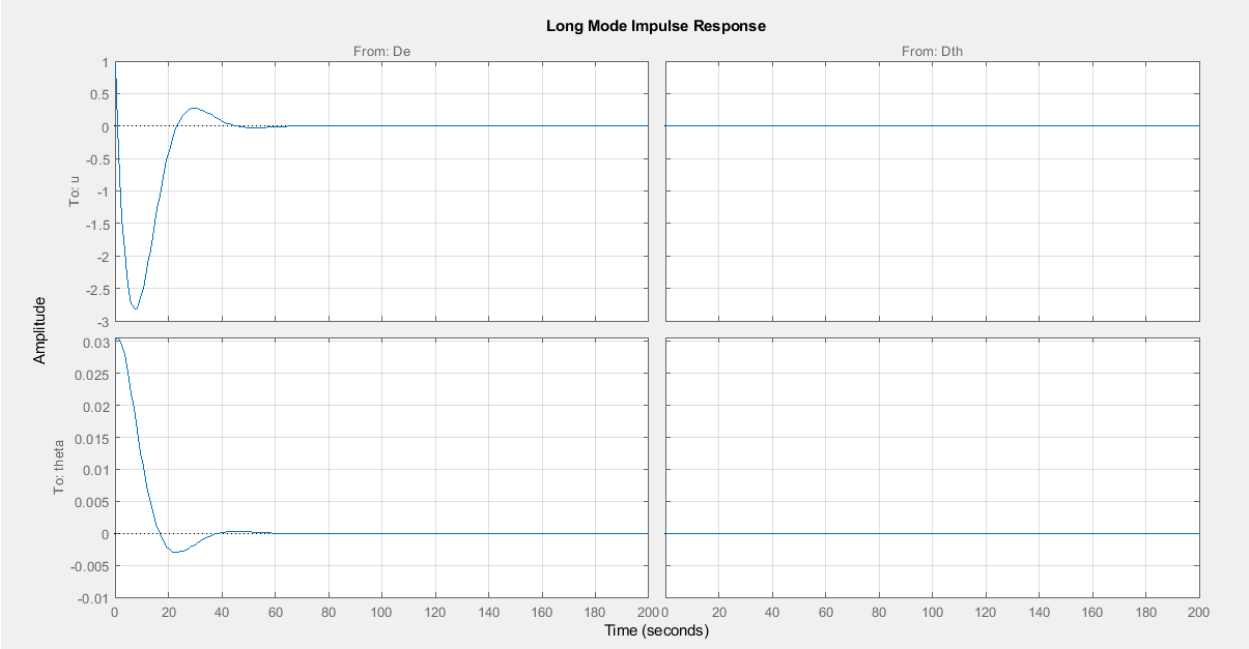

The long mode unity initial value response

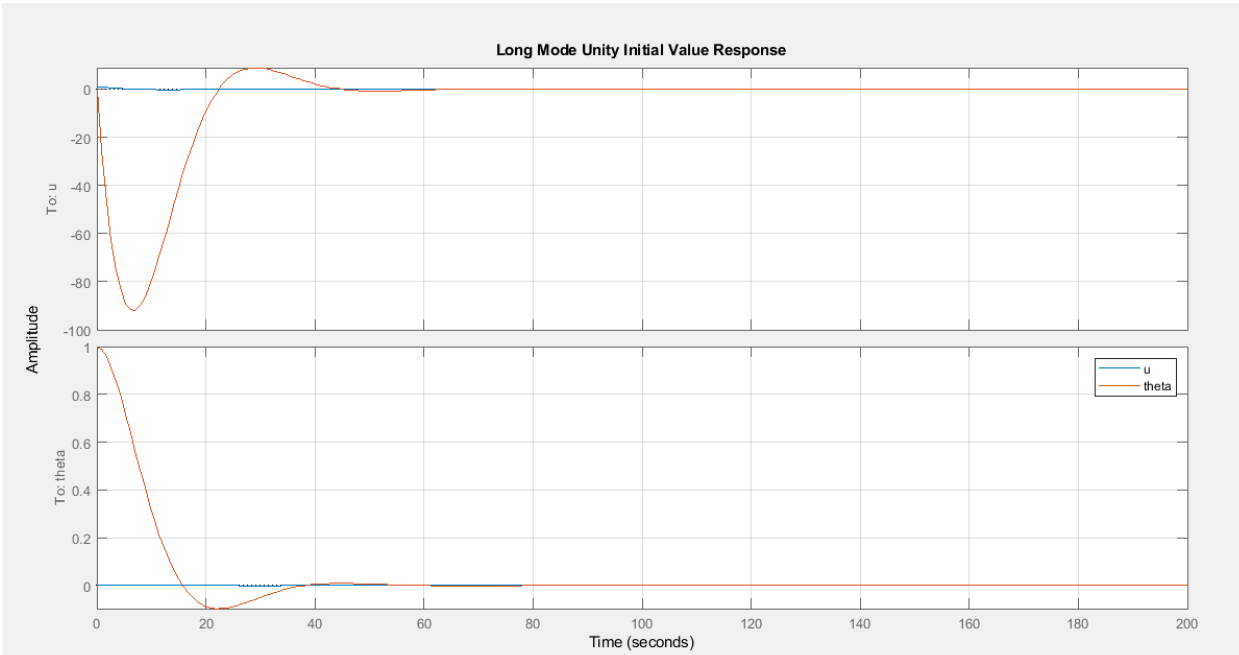

Lateral Flight Dynamics

Firstly the aircraft data were imported to the Matlab workspace.

Non-dimensional stability derivatives

The Non-dimensional stability derivatives are easily evaluated as

The same can be performed for the lateral-directional stability derivatives

	Y	L	N
v	$Y_v = \frac{q_\infty S}{m U_0} C_{y_\beta}$	$L_v = \frac{q_\infty S b}{I_{xx} U_0} C_{\ell_\beta}$	$N_v = \frac{q_\infty S b}{I_{zz} U_0} C_{n_\beta}$
p	$Y_p = \frac{q_\infty S b}{2 m U_0} C_{y_{\dot{p}}}$	$L_p = \frac{q_\infty S b^2}{2 I_{xx} U_0} C_{\ell_{\dot{p}}}$	$N_p = \frac{q_\infty S b^2}{2 I_{zz} U_0} C_{n_{\dot{p}}}$
r	$Y_r = \frac{q S b}{2 m U_0} C_{y_{\dot{r}}}$	$L_r = \frac{q_\infty S b^2}{2 I_{xx} U_0} C_{\ell_{\dot{r}}}$	$N_r = \frac{q_\infty S b^2}{2 I_{zz} U_0} C_{n_{\dot{r}}}$
δ	$Y_\delta = \frac{q S}{m} C_\delta$	$L_\delta = \frac{q S b}{I_{xx}} C_\delta$	$N_\delta = \frac{q S b}{I_{zz}} C_\delta$

Which will have the values of

Clca	0.0516
Clcr	0.0144
Clp	-0.4946
Clr	0.1659
Clv	-0.2190
Cnca	0.0060
Cncr	-0.0343
Cnp	-0.0842
Cnr	-0.1101
Cnv	-0.0373
Cyca	0
Cycr	8.1128e-04
Cyp	0
Cyr	0
Cyv	-1.0663

Lateral State-Space Model

The lateral state-space model for the aircraft linearized equations of motion was constructed as

- 5×5 Lateral (Asymmetric) Set

$$\begin{pmatrix} \dot{v} \\ \dot{p} \\ \dot{r} \\ \dot{\phi} \\ \dot{\psi} \end{pmatrix} = \begin{bmatrix} Y_v & Y_p & Y_r - u_0 & g & 0 \\ \mathcal{L}'_v & \mathcal{L}'_p & \mathcal{L}'_r & 0 & 0 \\ N'_v & N'_p & N'_r & 0 & 0 \\ 0 & 1 & 0 & 0 & 0 \\ 0 & 0 & 1 & 0 & 0 \end{bmatrix} \begin{pmatrix} v \\ p \\ r \\ \phi \\ \psi \end{pmatrix} + \begin{bmatrix} Y_{\delta_a} & Y_{\delta_r} \\ \mathcal{L}'_{\delta_a} & \mathcal{L}'_{\delta_r} \\ N'_{\delta_a} & N'_{\delta_r} \\ 0 & 0 \\ 0 & 0 \end{bmatrix} \begin{pmatrix} \delta_a \\ \delta_r \end{pmatrix}$$

where

$$\mathcal{L}' = \frac{\mathcal{L} + \frac{I_{xz}}{I_x} N}{1 - \frac{I_{xz}^2}{I_x I_z}} \quad \text{and} \quad N' = \frac{N + \frac{I_{xz}}{I_z} \mathcal{L}}{1 - \frac{I_{xz}^2}{I_x I_z}}$$

Also, note that $\beta = \frac{v}{u_0}$.

The state-space matrices were as

ALateralFull

5x5 double

	1	2	3	4	5
1	-0.0890	0	-218.5725	32.2000	0
2	-0.0044	-0.9750	0.3270	0	0
3	-7.5113e-04	-0.1660	-0.2170	0	0
4	0	1	0	0	0
5	0	0	1	0	0

ALateralFull BLateralFull

5x2 double

	1	2
1	0	0.0148
2	0.2270	0.0636
3	0.0264	-0.1510
4	0	0
5	0	0

CLateralFull

5x5 double

	1	2	3	4	5
1	1	0	0	0	0
2	0	1	0	0	0
3	0	0	1	0	0
4	0	0	0	1	0
5	0	0	0	0	1

DLateralFull

5x2 double

	1	2
1	0	0
2	0	0
3	0	0
4	0	0
5	0	0

Pole Placement In Case Of Insatiability

The lateral system poles

PolesFull

5x1 complex double

	1
1	0.0000 + 0.0000i
2	-1.2005 + 0.0000i
3	0.0721 + 0.3720i
4	0.0721 - 0.3720i
5	-0.2247 + 0.0000i

The lateral system was found to be insatiable (has two positive poles) and a pole placement was required to stabilize it as the PID controller was not able to stabilize the system on the autopilot design.

The new A matrix for each model is

1. Full Model

ALateralFull

5x5 double

	1	2	3	4	5
1	-0.0890	0	-218.5725	32.2000	0
2	-0.0044	-0.9750	0.3270	0	0
3	-7.5113e-04	-0.1660	-0.2170	0	0
4	0	1	0	0	0
5	0	0	1	0	0
6					

2. Dutch Roll Mode

ALateralDutch

3x3 double

	1	2	3
1	-0.0890	0	-218.5725
2	-0.0044	-0.9750	0.3270
3	-7.5113e-04	-0.1660	-0.2170

3. Rolling Mode

ALateralRolling

1x1 double

	1	2
1	-0.9750	

4. Spiral Mode

ALateralSpiral

3x3 double

	1	2	3
1	-0.9750	0.3270	0
2	-0.1660	-0.2170	0
3	1	0	0

Lateral Modes

The lateral motion has three modes; the datch rolling mode, rolling mode, and the spiral mode.

The Dutch Rolling mode

The datch rolling mode is a subsystem from the full model which depends on the states $v,\ p,\ \&\ r$ only and the two inputs δ_a & δ_r. It was evaluated as

```
% Dutch Roll Mode
PolesDutch = pole(LateralSSDutch);
PolesDutchNew = complex(-abs(real(PolesDutch)),imag(PolesDutch));
kDutch = place(ALateralDutch,BLateralDutch,PolesDutchNew);
ALateralDutch = ALateralDutch-BLateralDutch*kDutch;
LateralSSDutch = ss(ALateralDutch,BLateralDutch,CLateralDutch,DLateralDutch);
LateralSSDutch.OutputName = {'v';'p';'r'};
LateralSSDutch.InputName = {'Da';'Dr'};
```

The Rolling mode

The rolling mode is a subsystem from the full model which depends on the state p only and the input δ_a. It was evaluated as

```
% Rolling Mode
PolesRolling = pole(LateralSSRolling);
PolesRollingNew = complex(-abs(real(PolesRolling)),imag(PolesRolling));
kRolling = place(ALateralRolling,BLateralRolling,PolesRollingNew);
ALateralRolling = ALateralRolling-BLateralRolling*kRolling;
LateralSSRolling = ss(ALateralRolling,BLateralRolling,CLateralRolling,DLateralRolling);
LateralSSRolling.OutputName = {'p'};
LateralSSRolling.InputName = {'Da'};
```

The Spiral mode

The sprial mode is a subsystem from the full model which depends on the states $p, r,\ \&\ \phi$ only and the input δ_r. It was evaluated as

```
% Spiral Mode
PolesSpiral = pole(LateralSSSpiral);
PolesSpiralNew = complex(-abs(real(PolesSpiral)),imag(PolesSpiral));
kSpiral = place(ALateralSpiral,BLateralSpiral,PolesSpiralNew);
ALateralSpiral = ALateralSpiral-BLateralSpiral*kSpiral;
LateralSSSpiral = ss(ALateralSpiral,BLateralSpiral,CLateralSpiral,DLateralSpiral);
LateralSSSpiral.OutputName = {'p';'r';'phi'};
LateralSSSpiral.InputName = {'Dr'};
```

Lateral Model Characteristics

And the full state-space model characteristics were

1. Eigenvalues & Eigenvectors

eigVectorsLateralFull

5x5 complex double

	1	2	3	4	5
1	0.2624 - 0.1982i	0.2624 + 0.1982i	-0.3827 + 0.0000i	0.7999 + 0.0000i	0.9980 + 0.0000i
2	-0.0594 + 0.3063i	-0.0594 - 0.3063i	4.3523e-17 + 0.0000e+00i	0.1103 + 0.0000i	0.0485 + 0.0000i
3	0.1209 - 0.0005i	0.1209 + 0.0005i	-4.5375e-14 + 0.0000e+00i	-0.0718 + 0.0000i	-8.7483e-04 + 0.0000e+00i
4	0.8234 + 0.0000i	0.8234 + -0.0000i	-0.0011 + 0.0000i	-0.4907 + 0.0000i	-0.0404 + 0.0000i
5	-0.0619 - 0.3131i	-0.0619 + 0.3131i	0.9239 + 0.0000i	0.3195 + 0.0000i	7.2871e-04 + 0.0000e+00i
6					

eigVectorsLateralFull eigValuesLateralFull

5x5 complex double

	1	2	3	4	5
1	-0.0721 + 0.3720i	0.0000 + 0.0000i	0.0000 + 0.0000i	0.0000 + 0.0000i	0.0000 + 0.0000i
2	0.0000 + 0.0000i	-0.0721 - 0.3720i	0.0000 + 0.0000i	0.0000 + 0.0000i	0.0000 + 0.0000i
3	0.0000 + 0.0000i	0.0000 + 0.0000i	-4.9001e-14 + 0.0000e+00i	0.0000 + 0.0000i	0.0000 + 0.0000i
4	0.0000 + 0.0000i	0.0000 + 0.0000i	0.0000 + 0.0000i	-0.2247 + 0.0000i	0.0000 + 0.0000i
5	0.0000 + 0.0000i	0.0000 + 0.0000i	0.0000 + 0.0000i	0.0000 + 0.0000i	-1.2005 + 0.0000i

2. Poles

PolesFull

5x1 complex double

	1
1	-0.0721 + 0.3720i
2	-0.0721 - 0.3720i
3	-4.9001e-14 + 0.0000e+00i
4	-0.2247 + 0.0000i
5	-1.2005 + 0.0000i

3. Undamped natural frequency ω_n & Damping ratio ζ

WnFull

5x1 double

	1
1	4.9001e-14
2	0.2247
3	0.3789
4	0.3789
5	1.2005

ZetaFull

5x1 double

	1
1	1
2	1
3	0.1903
4	0.1903
5	1

4. Settling time

(10 outputs for all five states with each input)

StepInfoFull | StepInfoFull(1, 1)

StepInfoFull(1, 1)

Field	Value
RiseTime	4.2052e+03
SettlingTime	4.8960e+03
SettlingMin	-289.4589
SettlingMax	-260.5670
Overshoot	0
Undershoot	0
Peak	289.4589
PeakTime	5001

StepInfoFull | StepInfoFull(1, 2)

StepInfoFull(1, 2)

Field	Value
RiseTime	4.2326e+03
SettlingTime	4.8950e+03
SettlingMin	1.3507e+03
SettlingMax	1.5007e+03
Overshoot	0
Undershoot	0
Peak	1.5007e+03
PeakTime	5001

StepInfoFull | StepInfoFull(2, 1)

StepInfoFull(2, 1)

Field	Value
RiseTime	0.0534
SettlingTime	675.5609
SettlingMin	-0.6908
SettlingMax	0.4252
Overshoot	3.4667e+04
Undershoot	9.8205e+04
Peak	1.9513
PeakTime	82

StepInfoFull | StepInfoFull(2, 2)

StepInfoFull(2, 2)

Field	Value
RiseTime	165.4412
SettlingTime	685.0271
SettlingMin	-2.2369
SettlingMax	3.6527
Overshoot	3.5709e+04
Undershoot	9.9576e+04
Peak	10.1573
PeakTime	92

StepInfoFull | StepInfoFull(3, 1)

StepInfoFull(3, 1)

Field	Value
RiseTime	73.8940
SettlingTime	518.7473
SettlingMin	1.5072
SettlingMax	2.0127
Overshoot	16.0070
Undershoot	0
Peak	2.0127
PeakTime	158

StepInfoFull | StepInfoFull(3, 2)

StepInfoFull(3, 2)

Field	Value
RiseTime	73.0094
SettlingTime	528.5450
SettlingMin	-10.3904
SettlingMax	-7.7110
Overshoot	16.6569
Undershoot	0
Peak	10.3904
PeakTime	167

StepInfoFull | StepInfoFull(4, 1)

StepInfoFull(4, 1)

Field	Value
RiseTime	68.1212
SettlingTime	3.5636e+03
SettlingMin	9.9232
SettlingMax	13.5821
Overshoot	23.9761
Undershoot	0
Peak	13.5821
PeakTime	158

StepInfoFull | StepInfoFull(4, 2)

StepInfoFull(4, 2)

Field	Value
RiseTime	67.1851
SettlingTime	3.5646e+03
SettlingMin	-70.0746
SettlingMax	-50.9329
Overshoot	24.6829
Undershoot	8.5360e-04
Peak	70.0746
PeakTime	167

StepInfoFull | StepInfoFull(5, 1)

StepInfoFull(5, 1)

Field	Value
RiseTime	3.9433e+03
SettlingTime	4.9024e+03
SettlingMin	590.5786
SettlingMax	656.1982
Overshoot	0
Undershoot	0
Peak	656.1982
PeakTime	5001

StepInfoFull | StepInfoFull(5, 2)

StepInfoFull(5, 2)

Field	Value
RiseTime	3.9362e+03
SettlingTime	4.9026e+03
SettlingMin	-3.3627e+03
SettlingMax	-3.0265e+03
Overshoot	0
Undershoot	0
Peak	3.3627e+03
PeakTime	5001

Lateral Modes Characteristics

The Dutch Rolling Mode

1. Undamped natural frequency ω_n & Damping ratio ζ

WnDutch

3x1 double

	1
1	0.1458
2	0.1458
3	1.1135

ZetaDutch

3x1 double

	1
1	0.5746
2	0.5746
3	1

2. Settling time

(6 outputs for three states with each input)

StepInfoDutch | StepInfoDutch(1, 1)

StepInfoDutch(1, 1)

Field	Value
RiseTime	22.4405
SettlingTime	74.1077
SettlingMin	-301.5637
SettlingMax	-247.4744
Overshoot	10.8837
Undershoot	0
Peak	301.5637
PeakTime	49

StepInfoDutch | StepInfoDutch(1, 2)

StepInfoDutch(1, 2)

Field	Value
RiseTime	22.4407
SettlingTime	74.1076
SettlingMin	1.4151e+03
SettlingMax	1.7244e+03
Overshoot	10.8837
Undershoot	0
Peak	1.7244e+03
PeakTime	49

StepInfoDutch | StepInfoDutch(2, 1)

StepInfoDutch(2, 1)

Field	Value
RiseTime	22.0227
SettlingTime	69.5088
SettlingMin	1.6940
SettlingMax	2.0820
Overshoot	10.7597
Undershoot	0
Peak	2.0820
PeakTime	44

StepInfoDutch | StepInfoDutch(2, 2)

StepInfoDutch(2, 2)

Field	Value
RiseTime	20.1357
SettlingTime	70.2041
SettlingMin	-10.6823
SettlingMax	-8.7204
Overshoot	12.1409
Undershoot	0
Peak	10.6823
PeakTime	44

StepInfoDutch | StepInfoDutch(3, 1)

StepInfoDutch(3, 1)

Field	Value
RiseTime	7.8510
SettlingTime	92.5261
SettlingMin	0.1027
SettlingMax	0.1583
Overshoot	43.1069
Undershoot	0
Peak	0.1583
PeakTime	26

StepInfoDutch | StepInfoDutch(3, 2)

StepInfoDutch(3, 2)

Field	Value
RiseTime	7.8510
SettlingTime	92.5255
SettlingMin	-0.9053
SettlingMax	-0.5875
Overshoot	43.1047
Undershoot	0
Peak	0.9053
PeakTime	26

<u>The Rolling Mode</u>

1. Undamped natural frequency ω_n & Damping ratio ζ

WnRolling

1x1 double

	1	2
1	0.9750	

ZetaRolling

1x1 double

	1
1	1

2. Settling time

(1 outputs for one state with one input)

ZetaRolling | StepInfoRolling

1x1 struct with 8 fields

Field	Value
RiseTime	47.6837
SettlingTime	85.8184
SettlingMin	0.2095
SettlingMax	0.2328
Overshoot	0
Undershoot	0
Peak	0.2328
PeakTime	196

1x1 double

The Spiral Mode

1. Undamped natural frequency ω_n & Damping ratio ζ

WnSpiral

3x1 double

	1
1	0
2	0.2971
3	0.8949

ZetaSpiral

3x1 double

	1
1	-1
2	1
3	1

2. Settling time

(3 outputs for three states with one input)

StepInfoSpiral

3x1 struct with 8 fields

Fields	RiseTime	SettlingTime	SettlingMin	SettlingMax	Overshoot	Undershoot	Peak	PeakTime
1	75.5811	150.7621	-0.1338	-0.1207	0	17.6634	0.1338	1119
2	73.6061	131.2097	-0.5935	-0.5350	2.2204e-14	0	0.5935	1108
3	3.9513e+03	4.9022e+03	-68.0202	-61.2307	0	0.0512	68.0202	5001

Modes Approx. Error

Evaluating the modes approximation errors as

```
%% Modes Approx. Error
ErorrDutch = abs(WnDutch-WnFull(3:5))/WnFull(3:5)*100;
ErorrRolling = abs(WnRolling-WnFull(5))/WnFull(5)*100;
ErorrSpiral = abs(WnSpiral-WnFull([1 2 5]))/WnFull([1 2 5])*100;
```

The Dutch Roling Mode

ErorrDutch

3x3 double

	1	2	3
1	0	0	19.4203
2	0	0	19.4203
3	0	0	7.2500

So the short mode approximation error is around 19.42%

The Rolling Mode

ErorrRolling

1x1 double

	1
1	18.7859

So the short mode approximation error is around 19%

The Spiral Mode

ErorrSpiral

3x3 double

	1	2	3
1	0	0	4.0816e-12
2	0	0	6.0264
3	0	0	25.4555

So the short mode approximation error is 25.5%

Lateral Transfer Function

```
From input "Da" to output...
                -5.772 s^3 - 1.167 s^2 - 0.7086 s - 0.02784
 v:  ---------------------------------------------------------------
     s^5 + 1.57 s^4 + 0.619 s^3 + 0.2436 s^2 + 0.03874 s + 1.956e-15

            0.227 s^4 + 0.3941 s^3 + 0.4534 s^2 - 7.697e-05 s
 p:  ---------------------------------------------------------------
     s^5 + 1.57 s^4 + 0.619 s^3 + 0.2436 s^2 + 0.03874 s + 1.956e-15

            0.0264 s^4 + 0.04111 s^3 + 0.06173 s^2 + 0.0672 s
 r:  ---------------------------------------------------------------
     s^5 + 1.57 s^4 + 0.619 s^3 + 0.2436 s^2 + 0.03874 s + 1.956e-15

                0.227 s^3 + 0.3941 s^2 + 0.4534 s - 7.697e-05
 phi:  ---------------------------------------------------------------
       s^5 + 1.57 s^4 + 0.619 s^3 + 0.2436 s^2 + 0.03874 s + 1.956e-15

                0.0264 s^3 + 0.04111 s^2 + 0.06173 s + 0.0672
 psi:  ---------------------------------------------------------------
       s^5 + 1.57 s^4 + 0.619 s^3 + 0.2436 s^2 + 0.03874 s + 1.956e-15
```

```
From input "Dr" to output...
          0.0148 s^4 + 33.01 s^3 + 7.116 s^2 + 4.208 s + 0.1429
 v:  ---------------------------------------------------------------
     s^5 + 1.57 s^4 + 0.619 s^3 + 0.2436 s^2 + 0.03874 s + 1.956e-15

             0.0636 s^4 - 0.41 s^3 - 2.326 s^2 + 0.0003951 s
 p:  ---------------------------------------------------------------
     s^5 + 1.57 s^4 + 0.619 s^3 + 0.2436 s^2 + 0.03874 s + 1.956e-15

             -0.151 s^4 - 0.0367 s^3 - 0.08234 s^2 - 0.345 s
 r:  ---------------------------------------------------------------
     s^5 + 1.57 s^4 + 0.619 s^3 + 0.2436 s^2 + 0.03874 s + 1.956e-15

                 0.0636 s^3 - 0.41 s^2 - 2.326 s + 0.0003951
 phi:  ---------------------------------------------------------------
       s^5 + 1.57 s^4 + 0.619 s^3 + 0.2436 s^2 + 0.03874 s + 1.956e-15

                 -0.151 s^3 - 0.0367 s^2 - 0.08234 s - 0.345
 psi:  ---------------------------------------------------------------
       s^5 + 1.57 s^4 + 0.619 s^3 + 0.2436 s^2 + 0.03874 s + 1.956e-15
```

Modes Transfer Functions

The Dutch Rolling Mode

```
From input "Da" to output...
                -5.773 s - 6.427
 v:  -----------------------------------
     s^3 + 1.281 s^2 + 0.2078 s + 0.02366

         0.227 s^2 + 0.15 s + 0.04443
 p:  -----------------------------------
     s^3 + 1.281 s^2 + 0.2078 s + 0.02366

      0.0264 s^2 + 0.03175 s + 0.002616
 r:  -----------------------------------
     s^3 + 1.281 s^2 + 0.2078 s + 0.02366

From input "Dr" to output...
         0.0148 s^2 + 33.02 s + 36.75
 v:  -----------------------------------
     s^3 + 1.281 s^2 + 0.2078 s + 0.02366

        0.0636 s^2 - 0.6296 s - 0.2251
 p:  -----------------------------------
     s^3 + 1.281 s^2 + 0.2078 s + 0.02366

       -0.151 s^2 - 0.1816 s - 0.01496
 r:  -----------------------------------
     s^3 + 1.281 s^2 + 0.2078 s + 0.02366
```

The Rolling Mode

```
From input "Da" to output "p":
  0.227
---------
s + 0.975
```

The Spiral Mode

```
From input "Dr" to output...
        0.0636 s - 0.03558
 p:  ----------------------
     s^2 + 1.192 s + 0.2659

        -0.151 s - 0.1578
 r:  ----------------------
     s^2 + 1.192 s + 0.2659

            0.0636 s - 0.03558
 phi:  --------------------------
       s^3 + 1.192 s^2 + 0.2659 s
```

Longitudinal Simulation

Full Model

The full model step response

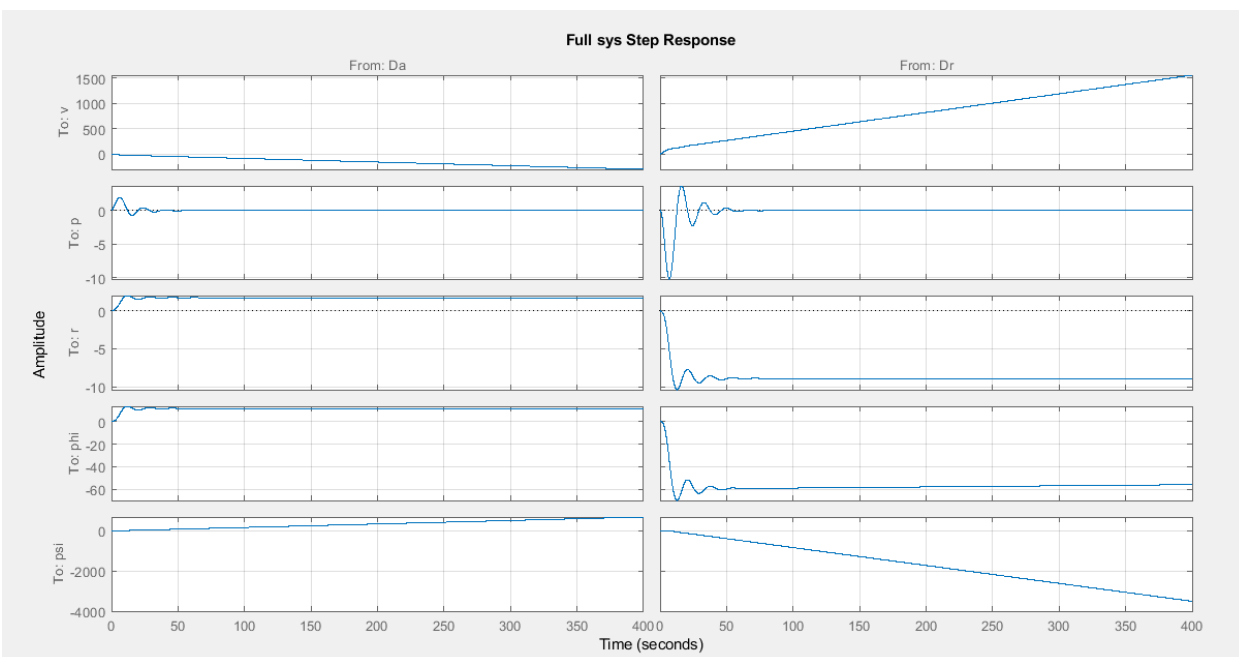

The full model impulse response

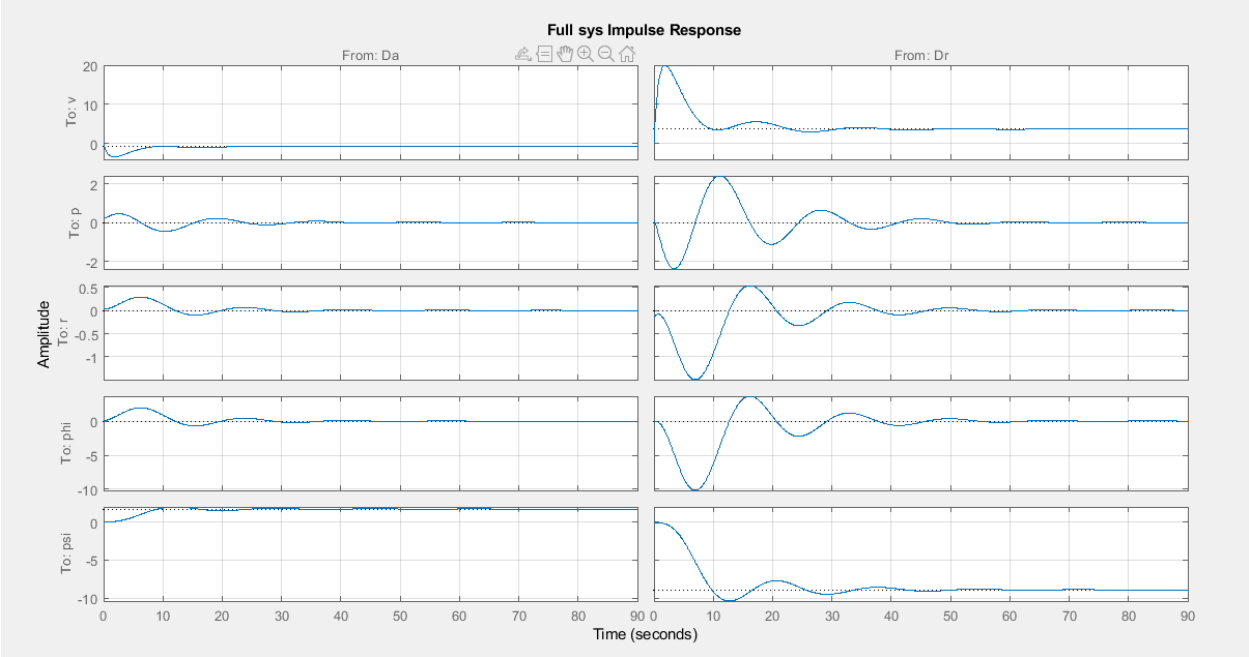

The full model unity initial value response

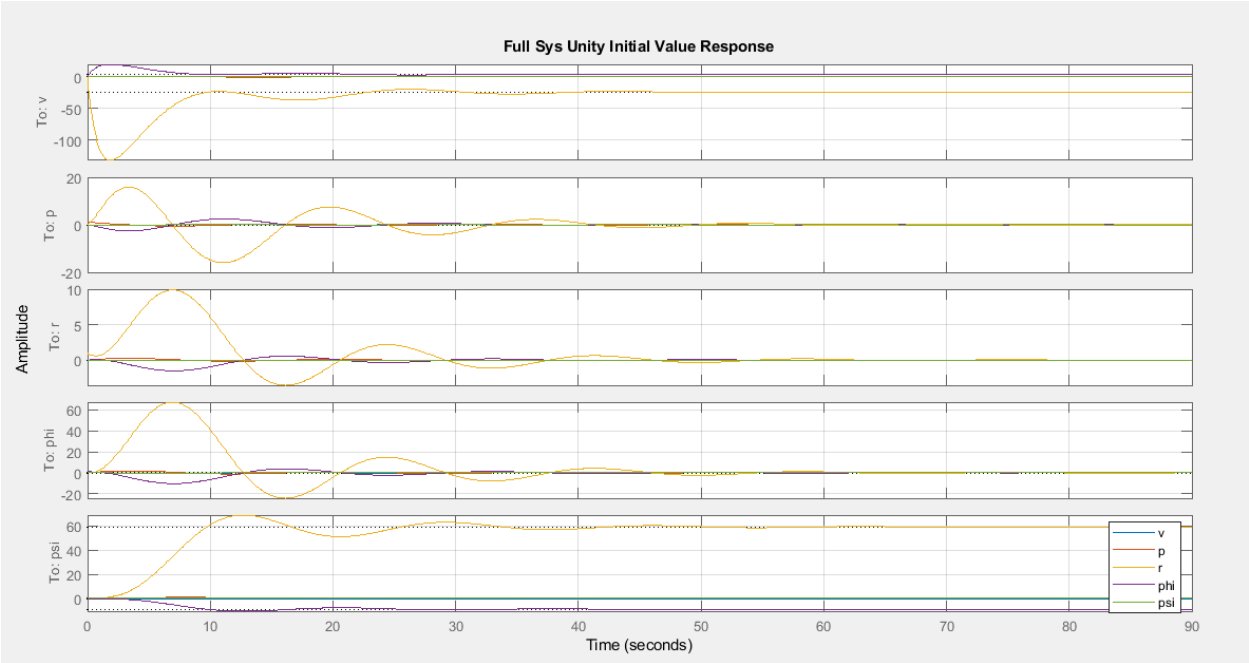

Dutch Rolling Mode

The dutch rolling mode step response

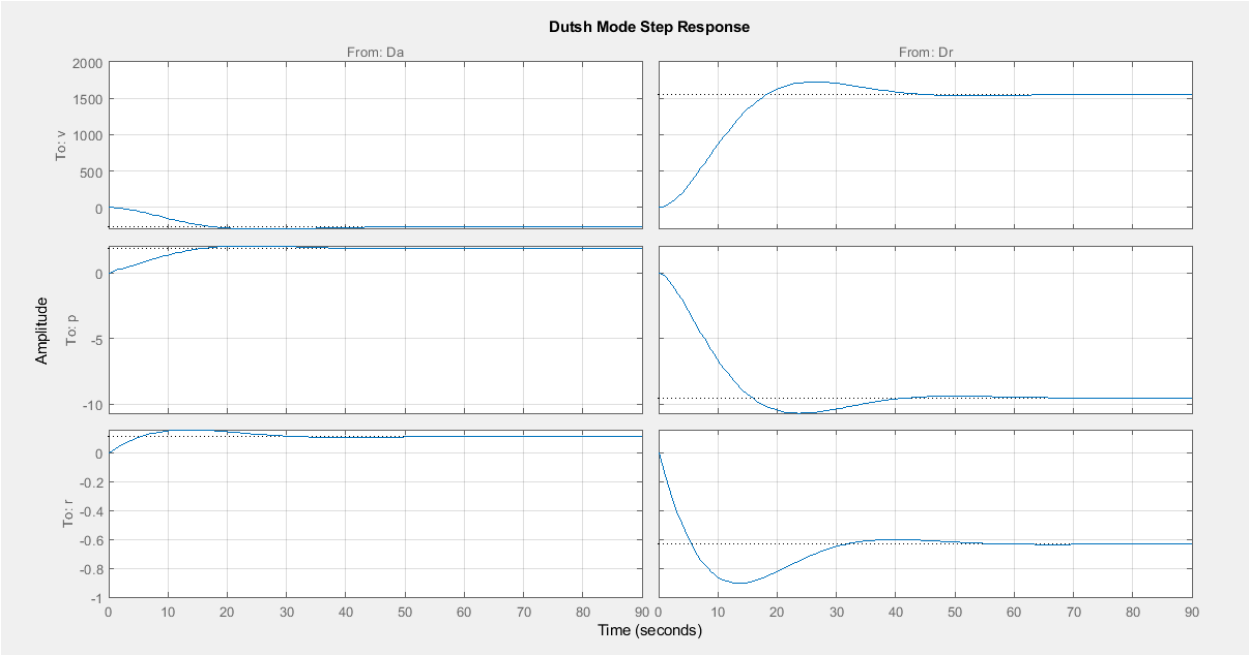

The dutch rolling mode impulse response

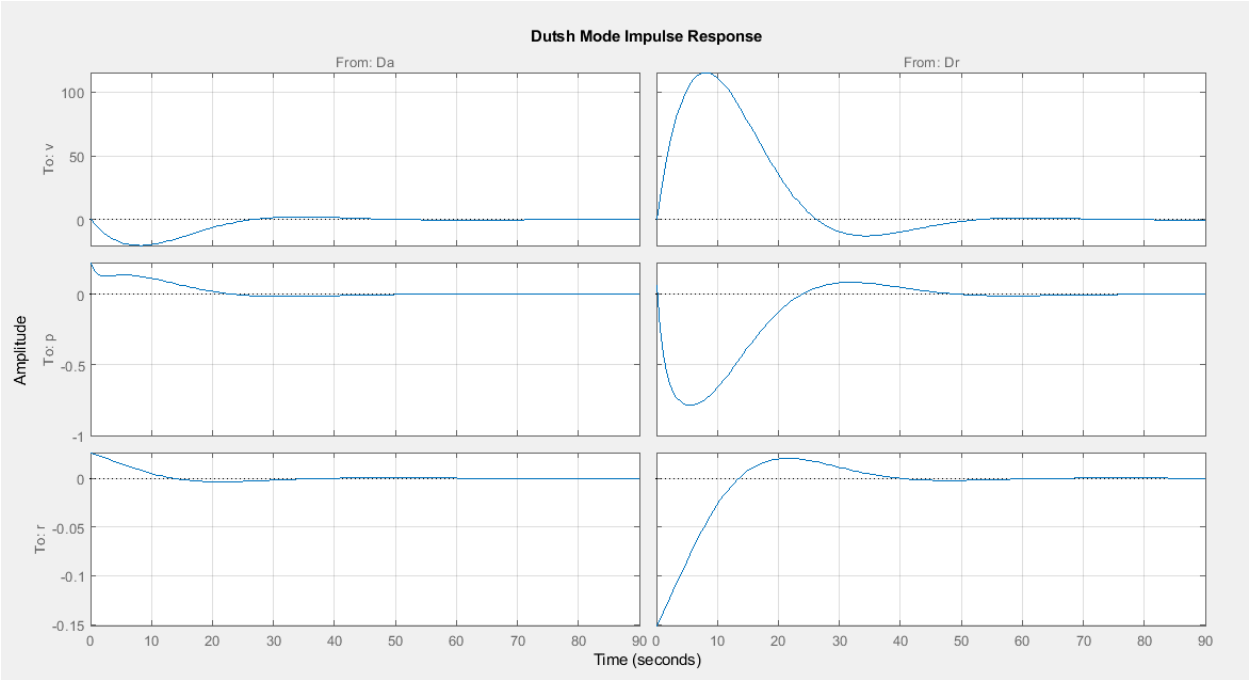

The dutch rolling mode unity initial value response

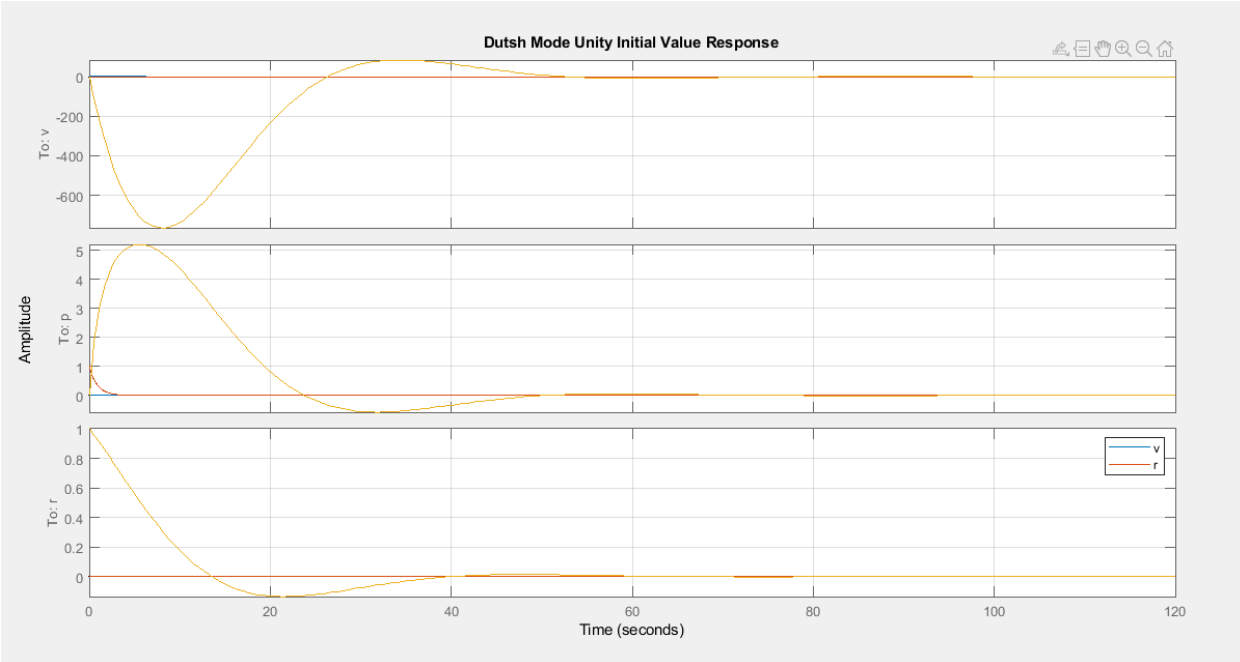

Rolling Mode

The rolling mode step response

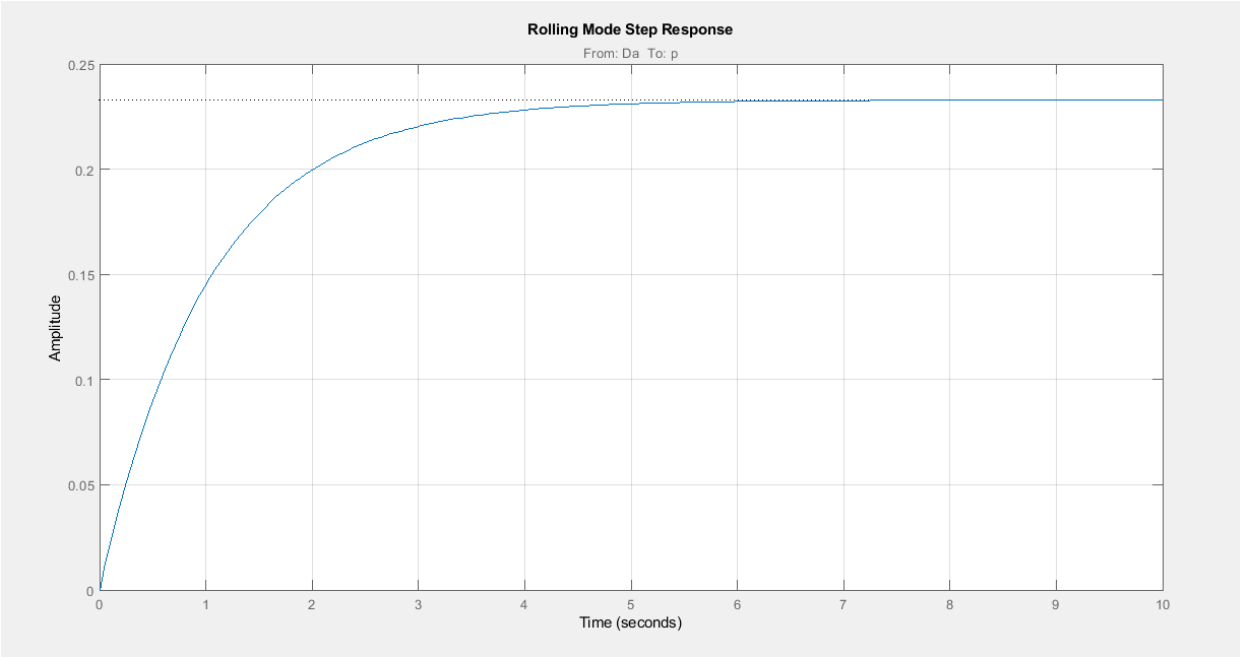

The rolling mode impulse response

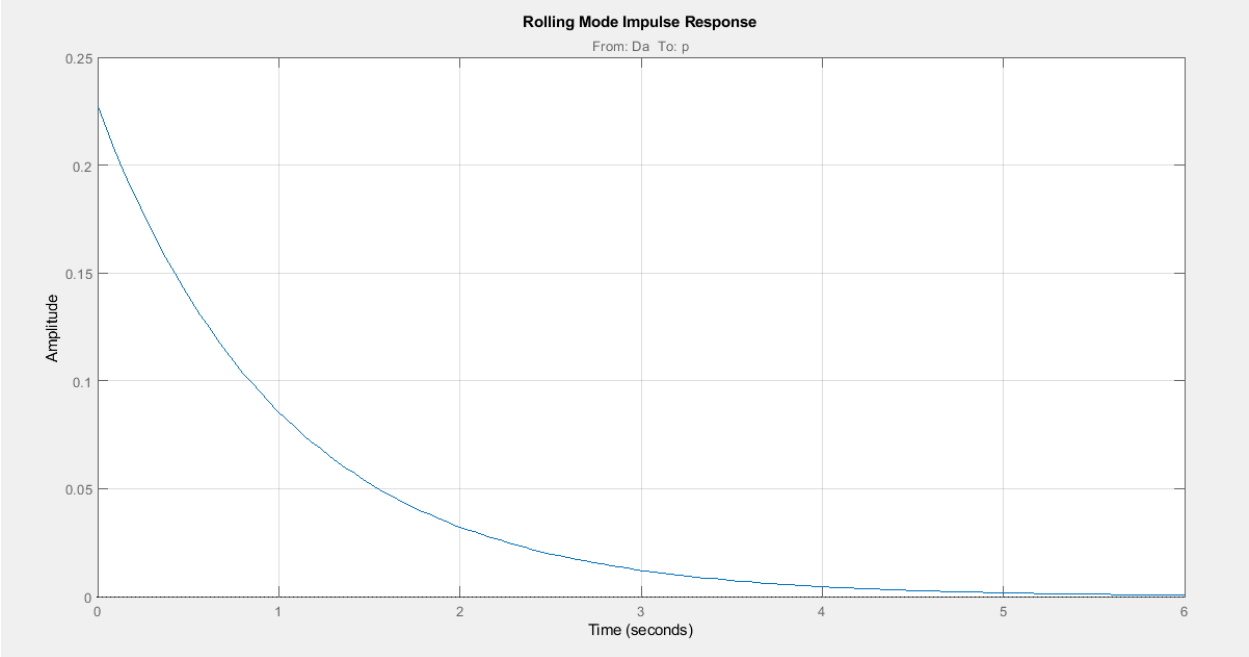

The rolling mode unity initial value response

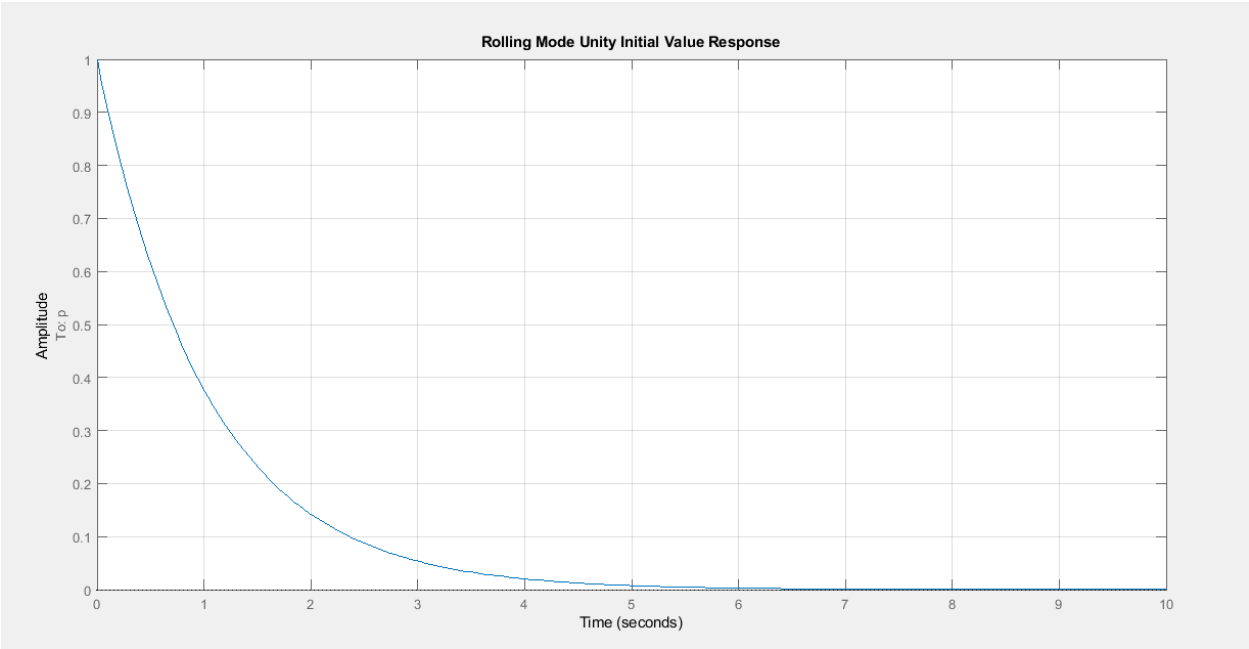

Spiral Mode

The spiral mode step response

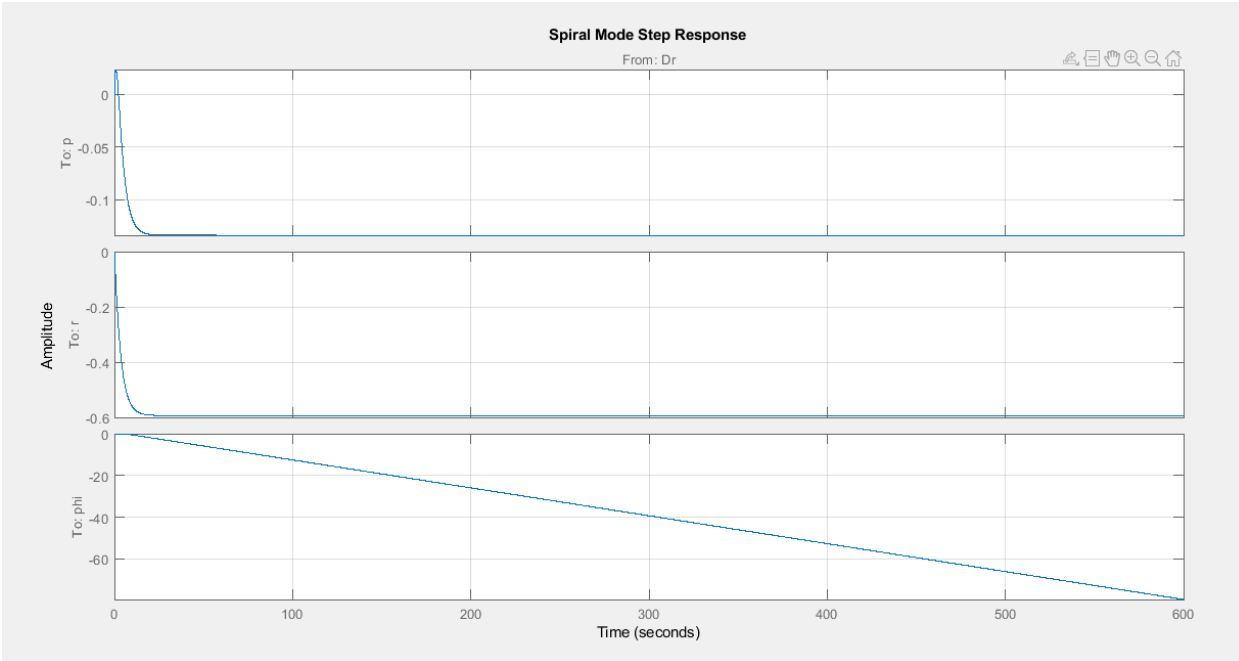

The spiral mode impulse response

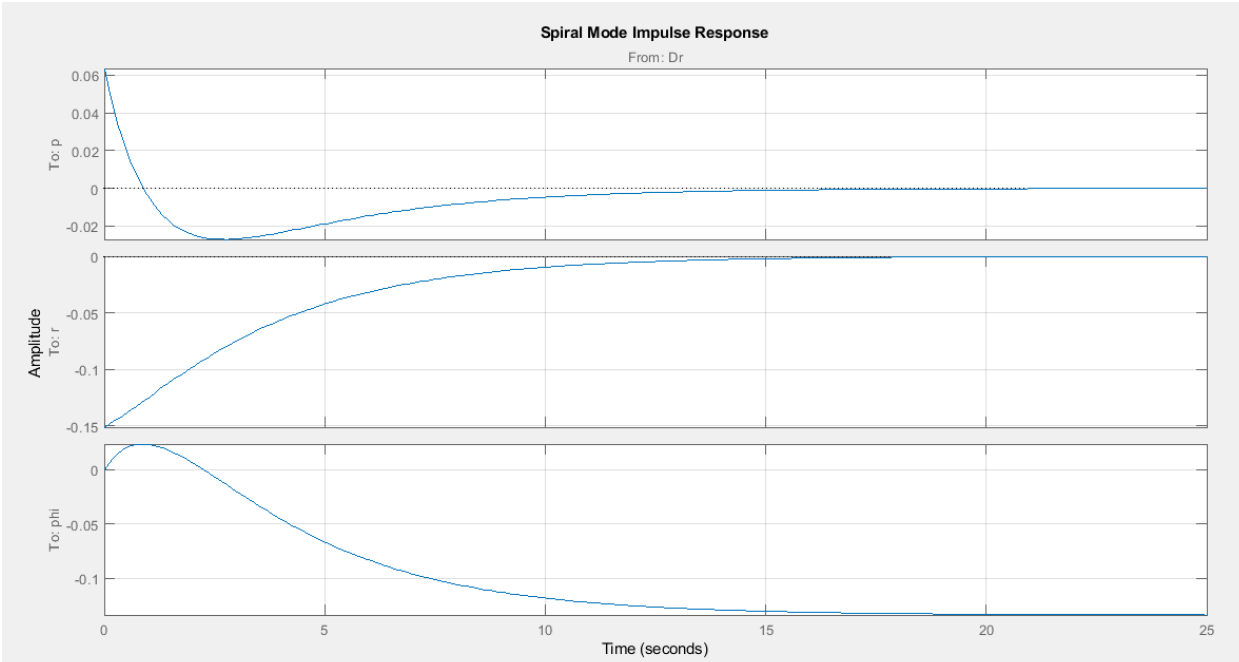

The spiral mode unity initial value response

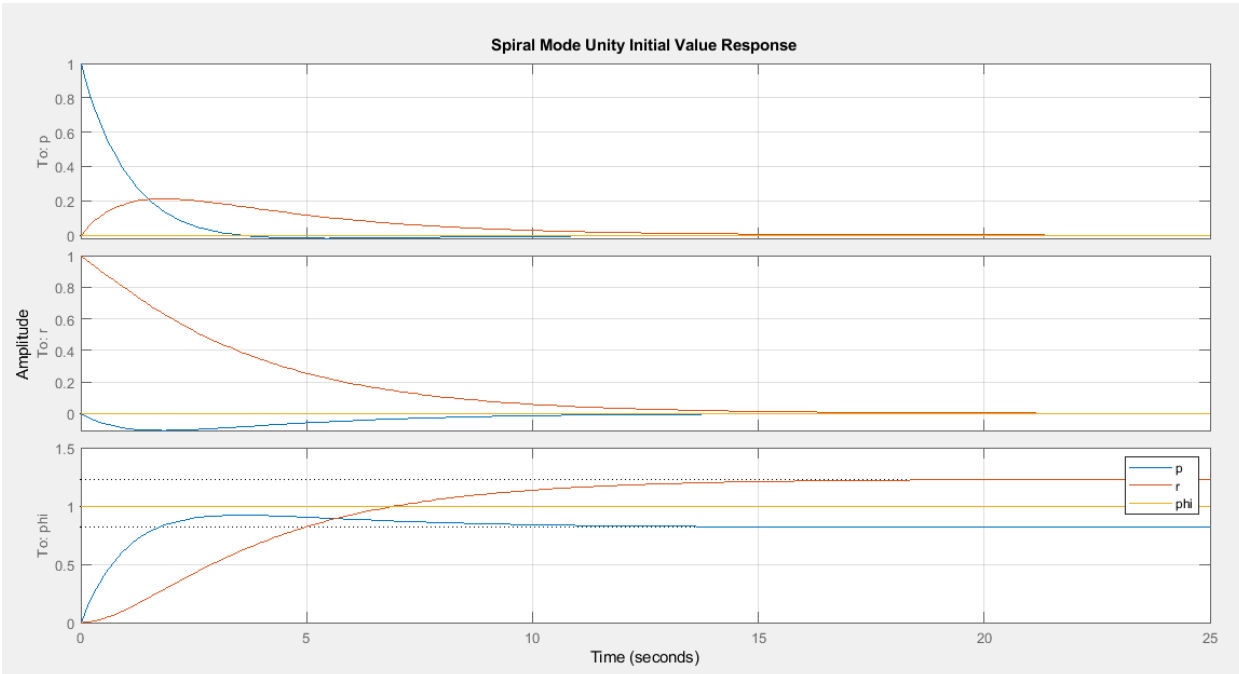

Longitudinal Autopilots (Pansy)

- We are going to control the motion of airplanes in longitudinal planes, achieving a required altitude and velocity by controlling the elevator and thrust. This is done by designing a **height controller, pitch angle controller,** and **velocity controller**.

Our state-space model:

A matrix:

```
ALongFull =

   -0.2090    0.1220         0  -32.2000
   -0.2020   -0.5120  212.3525         0
    0.0001   -0.0177   -0.3570         0
         0         0    1.0000         0
```

D matrix:

```
DLongFull =

     0     0
     0     0
     0     0
     0     0
```

B matrix:

```
BLongFull =

    0.9590    0.0001
   -6.4200   -0.0000
   -0.3780    0.0000
         0         0
```

C matrix:

```
CLongFull =

     1     0     0     0
     0     1     0     0
     0     0     1     0
     0     0     0     1
```

Poles of our system before adding autopilot:

```
>> pole(LongSSFull)

ans =

  -0.4365 + 1.9361i
  -0.4365 - 1.9361i
  -0.1025 + 0.1386i
  -0.1025 - 0.1386i
```

States initial condition:

U_0= 220 m/s, $Thetha_0$=0, q=0, w_0=32.14 m/s, $height_0$=0.

Autopilot Design :

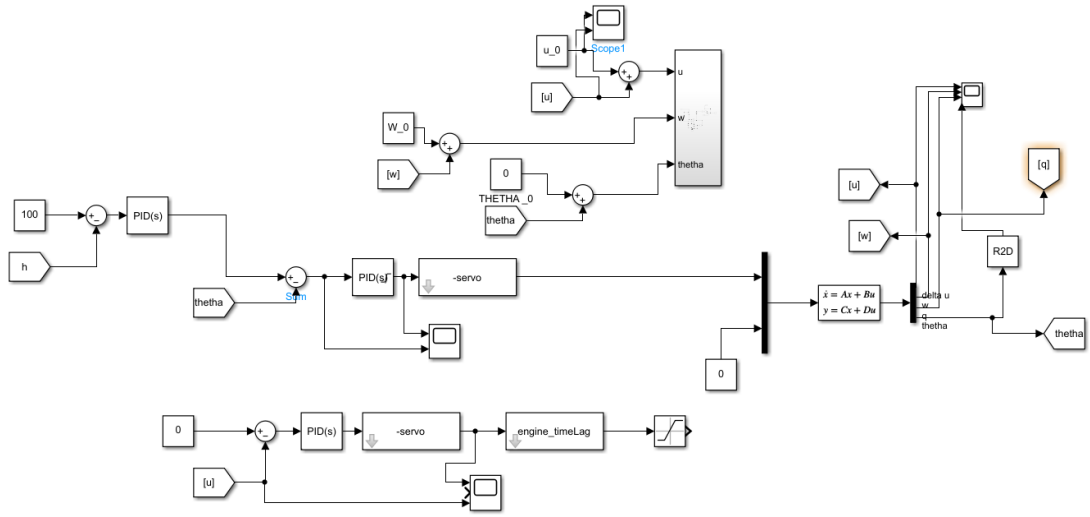

2. Choose appropriate controller gain to enhance aircraft responses to longitudinal modes.

We will go with the convention that we control altitude from pitch and velocity from thurst.

Firstly control height and pitch:

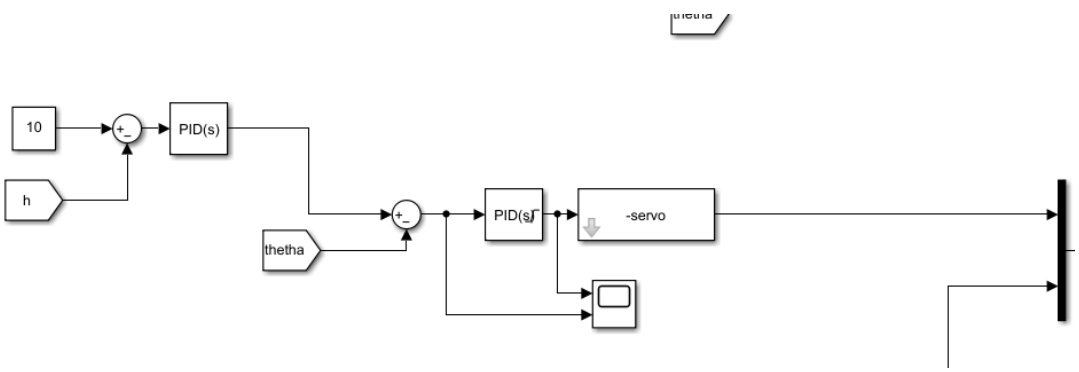

Elevator from Pitch PID controller:

When choosing PID controller parameters, we tried to make the system faster.

Show Parameters

Controller Parameters

	Tuned	Block
P	4.1424	4.0751
I	2.4499	2.3016
D	-9.722	-10.0148
N	0.42609	0.40691

Performance and Robustness

	Tuned	Block
Rise time	3.87 seconds	3.91 seconds
Settling time	24.2 seconds	24.6 seconds
Overshoot	8.01 %	7.32 %
Peak	1.08	1.07
Gain margin	6.27 dB @ 1.89 rad/s	6.79 dB @ 1.89 rad/s
Phase margin	70.9 deg @ 0.426 rad/s	70.4 deg @ 0.407 rad/s
Closed-loop stability	Stable	Stable

Close

Altitude from pitch PID Controller:

Controller Parameters

	Tuned
P	0.0017772
I	7.6927e-05
D	0.0070419
N	34.6044

Performance and Robustness

	Tuned
Rise time	4.01 seconds
Settling time	68.3 seconds
Overshoot	11.4 %
Peak	1.11
Gain margin	13.2 dB @ 1.15 rad/s
Phase margin	60 deg @ 0.303 rad/s
Closed-loop stability	Stable

Servo block: This block is used to simulate mechanical loads that delay the system:

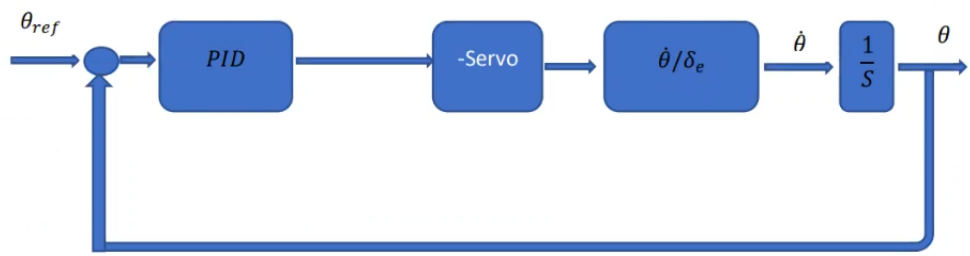

Transfer function of servo = $\frac{10}{S+10}$.

State space block:

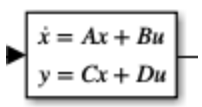

Where A, B, C,D are as mentioned above

Subsytem 1:

This subsystem is designed to relate theha to height, which is taken as input for throttle from airspeed controller0

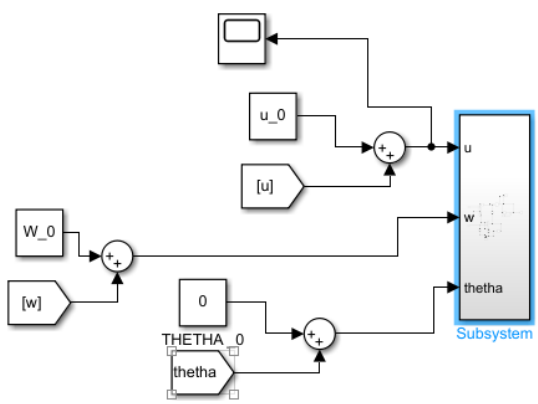

Secondly control velocity:

Our system:

Throttle from airspeed controller (PID): As parameters show it is also stable

Controller Parameters

	Tuned
P	-16941.728
I	-50.2026
D	518331.5683
N	0.02847

Performance and Robustness

	Tuned
Rise time	11.3 seconds
Settling time	2.19e+03 seconds
Overshoot	56.9 %
Peak	1.57
Gain margin	0.822 dB @ 0.0646 rad/s
Phase margin	64.5 deg @ 0.0285 rad/s
Closed-loop stability	Stable

Servo: to mimic mechanical loads:

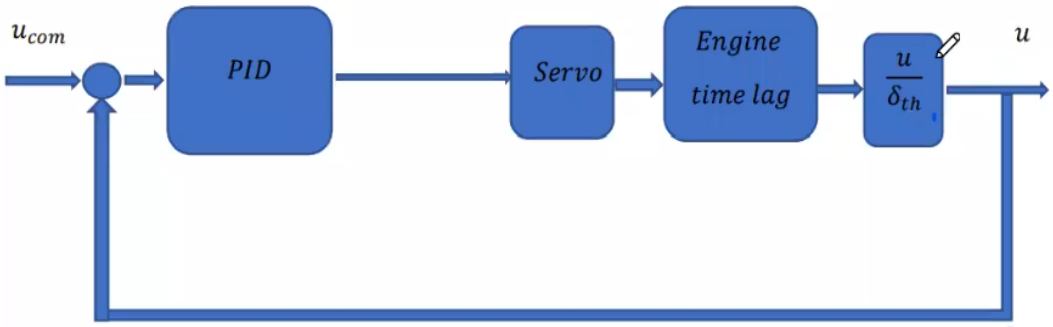

Engine time lag: is also a block to simulate lag action of engine. Transfer function = $\frac{0.1}{S+0.1}$.

3. Show aircraft longitudinal state response before and after applying the controller:

Before applying :

The longitudinal direction was stable even before adding an auto pilot.

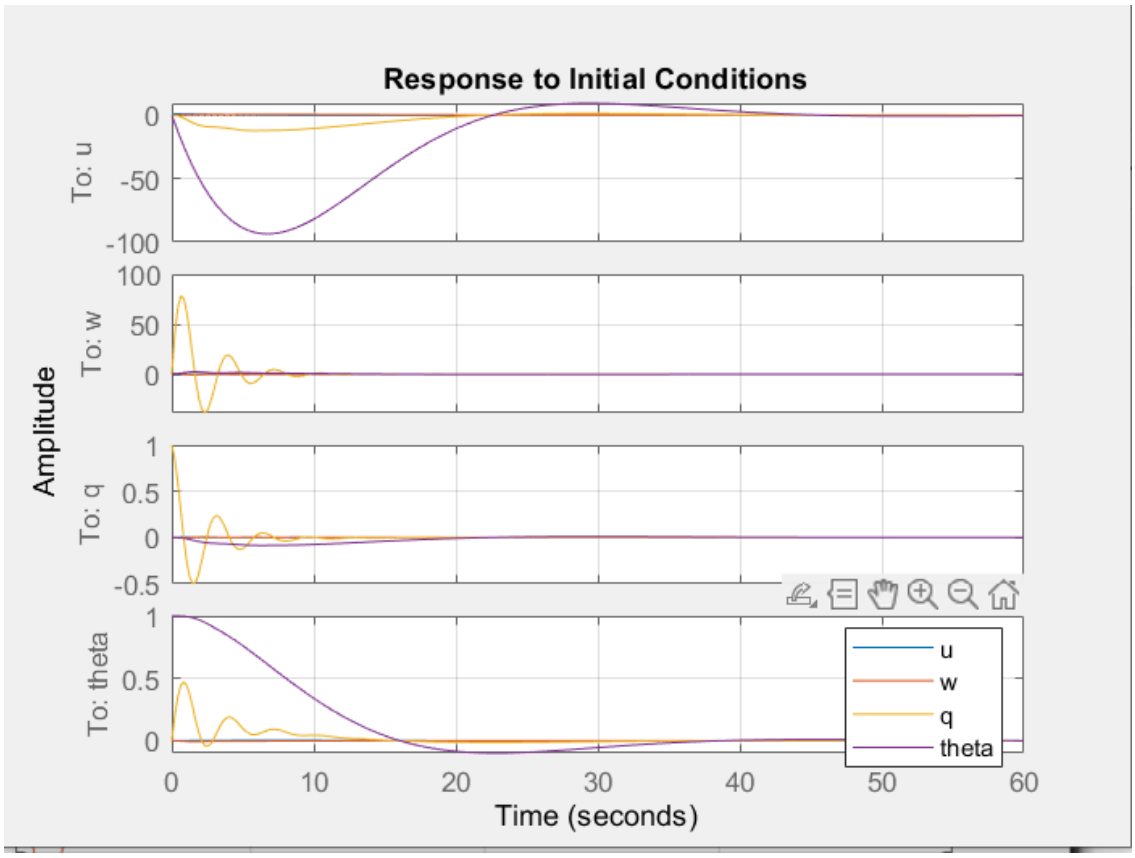

The system response **after adding autopilot**:

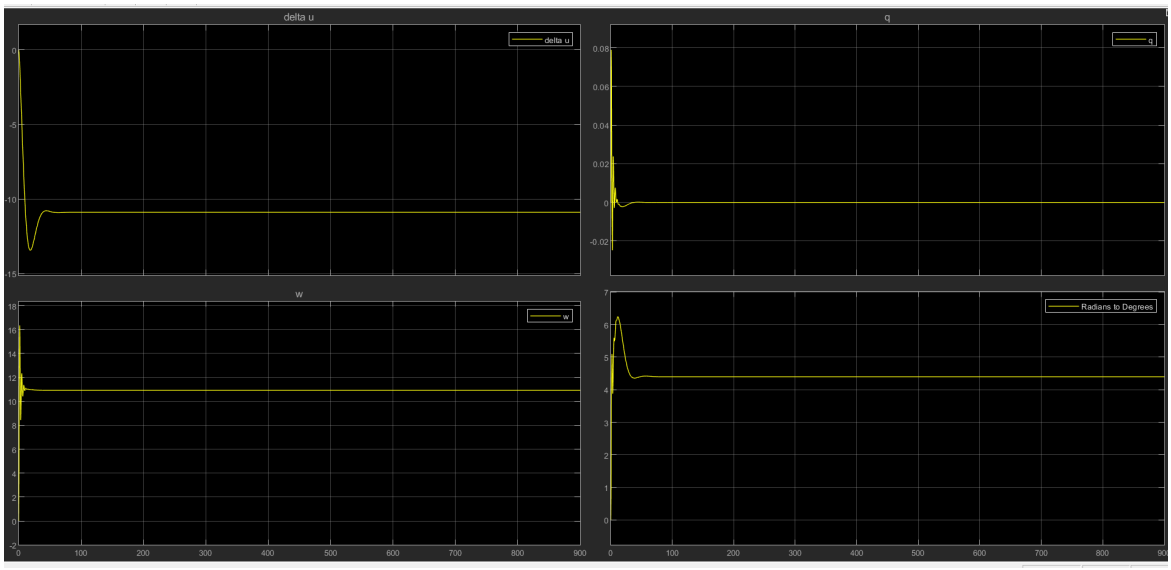

As it is clear, the system becomes stable faster.

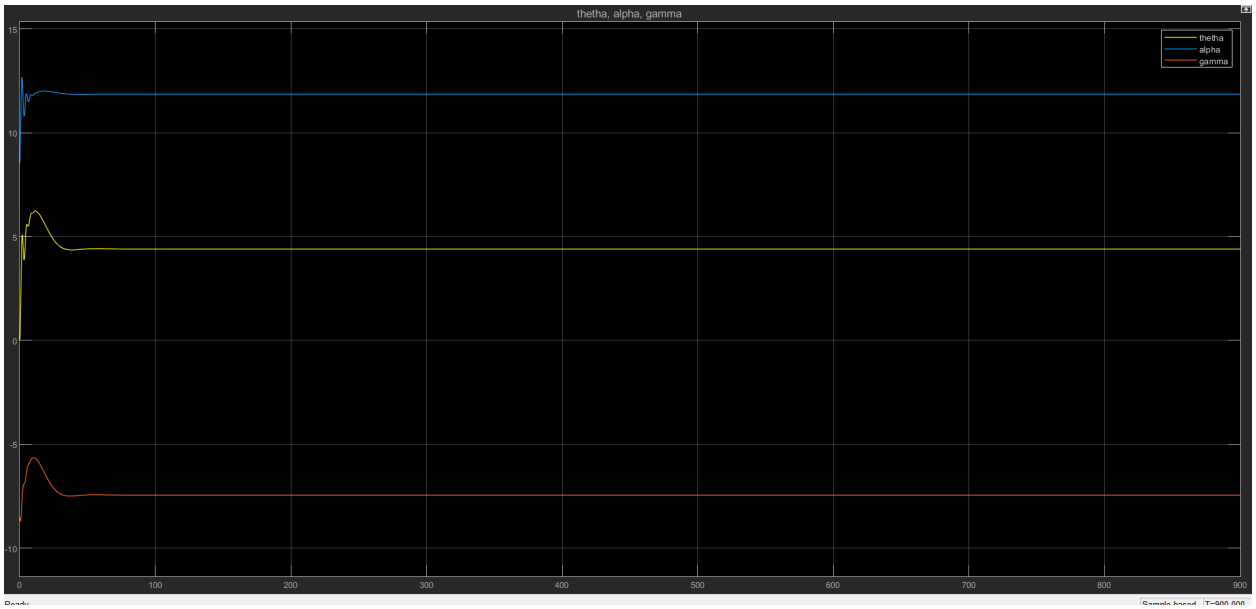

Lateral Autopilots (Hazem)

1. State Space Model (obtained in part C)

A =

	v	p	r	phi	psi
v	-0.089	0	-218.6	32.2	0
p	-0.004412	-0.975	0.327	0	0
r	-0.0007511	-0.166	-0.217	0	0
phi	0	1	0	0	0
psi	0	0	1	0	0

B =

	aileron	rudder
v	0	0.0148
p	0.227	0.0636
r	0.0264	-0.151
phi	0	0
psi	0	0

C =

	v	p	r	phi	psi
v	1	0	0	0	0
p	0	1	0	0	0
r	0	0	1	0	0
phi	0	0	0	1	0
psi	0	0	0	0	1

D =

	aileron	rudder
v	0	0
p	0	0
r	0	0
phi	0	0
psi	0	0

- When Analysing the lateral mode system we found that it is **unstable** so by applying full state feedback (Pole Placement) to place the positive poles on the negative side of the s-plane.
- Please note **that the PID controller was not enough** to stabilize all the 5 modes we have in the lateral system thus another controller (State Feedback) was used.
- Then, we had this **new A matrix**:

A =

	v	p	r	phi	psi
v	-0.08982	-0.02086	-218.4	32.18	-0.0003559
p	-0.06965	-0.2146	3.279	-0.6103	-0.02956
r	0.0003839	0.1457	-1.265	0.1858	0.0003719
phi	0	1	0	0	0
psi	0	0	1	0	0

2. Autopilot Control Design

- We are going to control the motion of the airplane in the **lateral and directional** planes, achieving the **coordinated turn** by controlling the ailerons and rudder, in which the turning maneuver is achieved when the heading angle of a plane is changing but **without skidding or slipping** which implies that the side-slip angle equal zero **(β = 0)**, and using the rudder to **oppose the adverse yaw** to coordinate the turn.
- This is done by designing a **Yaw damper** and a **Heading controller**.

a. Yaw damper:

- It includes the transfer function of Yaw rate (r) with respect to rudder deflection (r)

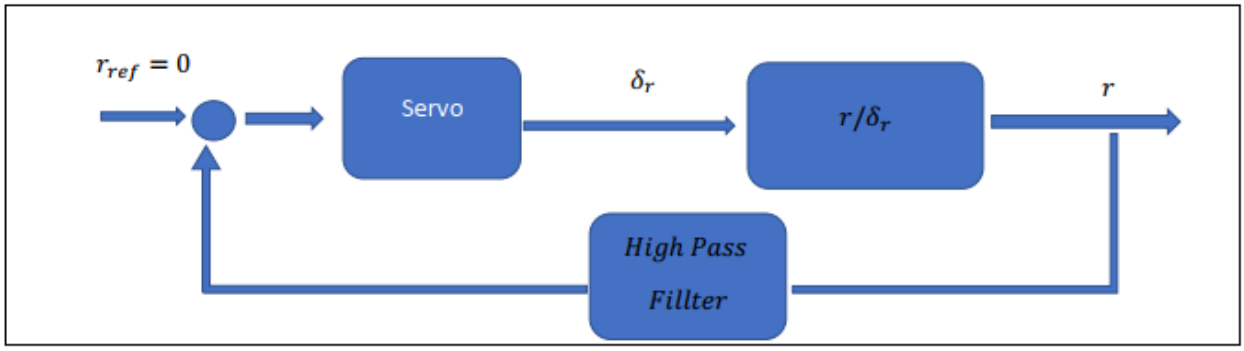

Yaw damper Block Diagram

- We have two other blocks, a **Servo** block to compensate for the mechanical delay and a **High pass filter** to eliminate any undesirable noise.

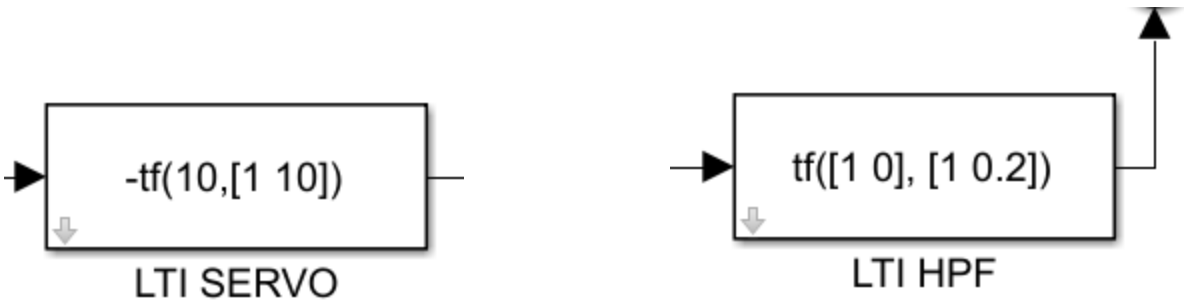

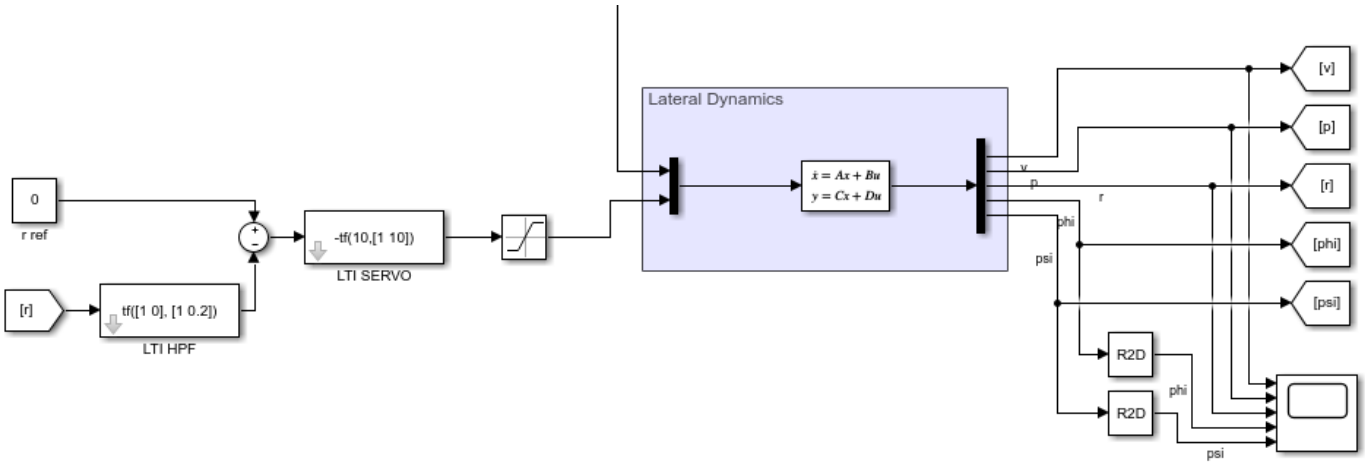

Full Yaw damper Model in Simulink

b. Heading Controller:

- It consists of Roll Controller and includes the transfer function of Roll angle (φ) with respect to ailerons deflection (a) with a Servo and PID controller and Yaw angle (ψ)

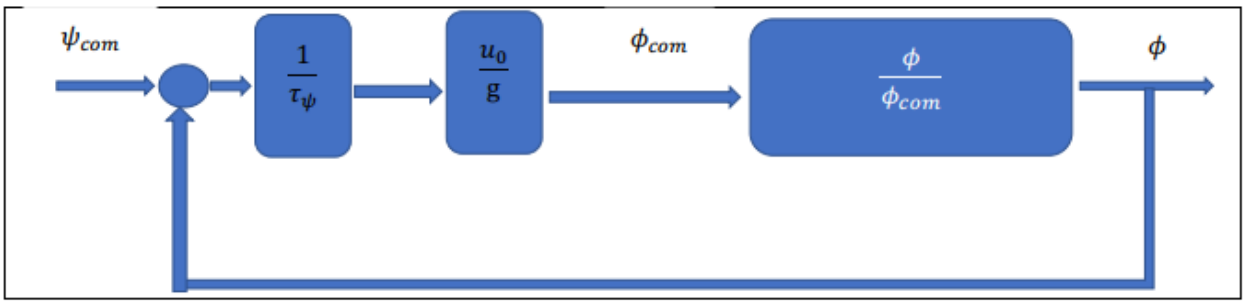

Yaw damper Block Diagram

- Where (**φ/φcom)** Block is represented by the roll controller as:

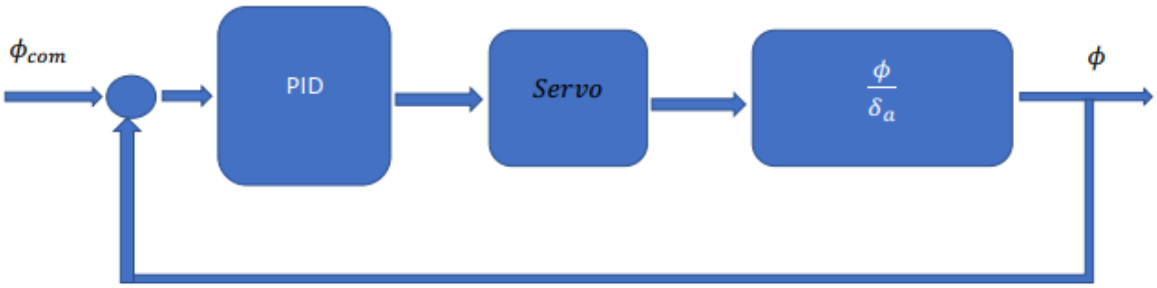

Roll Controller Block Diagram

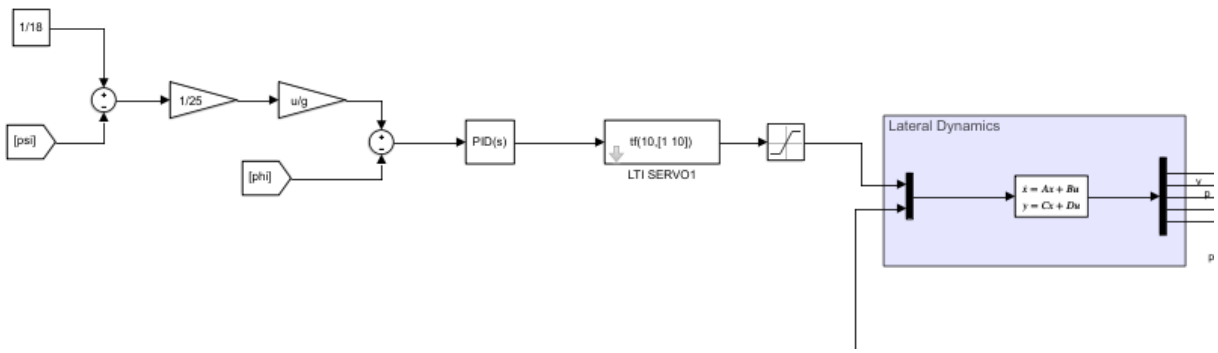

Full Heading Controller Model in Simulink

c. Full Lateral Model (Coordinated Turn):

- This is the full lateral system consisting of the yaw damper and the heading controller which includes the PID controller, which has three inputs (**yaw rate, yaw angle, and roll angle**) and has the 5 lateral outputs **(side-slip rate, roll rate, yaw rate, yaw angle rate, and roll angle rate**).
- We chose **Lag Time Constant** (τ) to be **25**, **Yaw angle Reference** to be **1/18** radian or **3.18** degrees, and **Saturation** values of **0.5** radians or nearly **30** degrees.

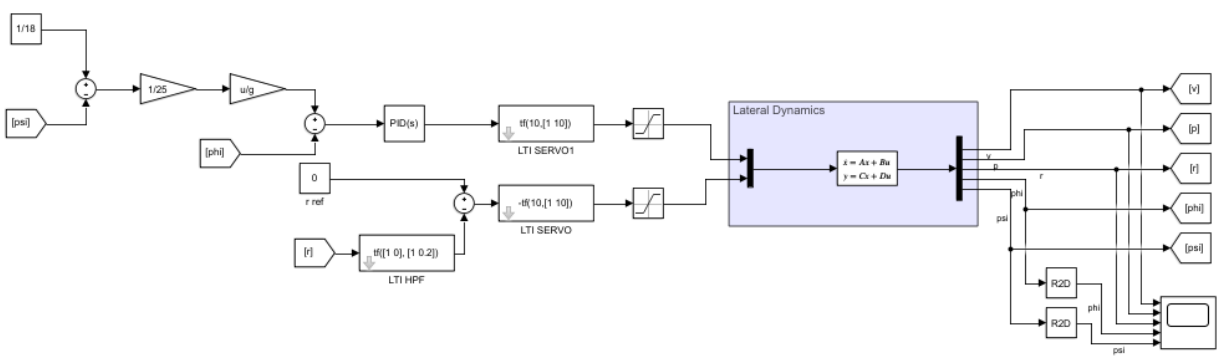

Full Lateral Model in Simulink

3. Lateral State Response

- Using **zero initial conditions,** we are calculating the **change of the lateral states**, with PID controller parameters:

Controller Parameters

	Tuned	Block
P	3.6846	3.6846
I	0.10884	0.10884
D	21.0254	21.0254
N	491.2449	491.2449

Performance and Robustness

	Tuned	Block
Rise time	0.275 seconds	0.275 seconds
Settling time	39.9 seconds	39.9 seconds
Overshoot	16.6 %	16.6 %
Peak	1.17	1.17
Gain margin	-20.6 dB @ 0.826 rad/s	-20.6 dB @ 0.826 rad/s
Phase margin	60 deg @ 4.3 rad/s	60 deg @ 4.3 rad/s
Closed-loop stability	Stable	Stable

- **Lateral State Response (After applying the controller):**

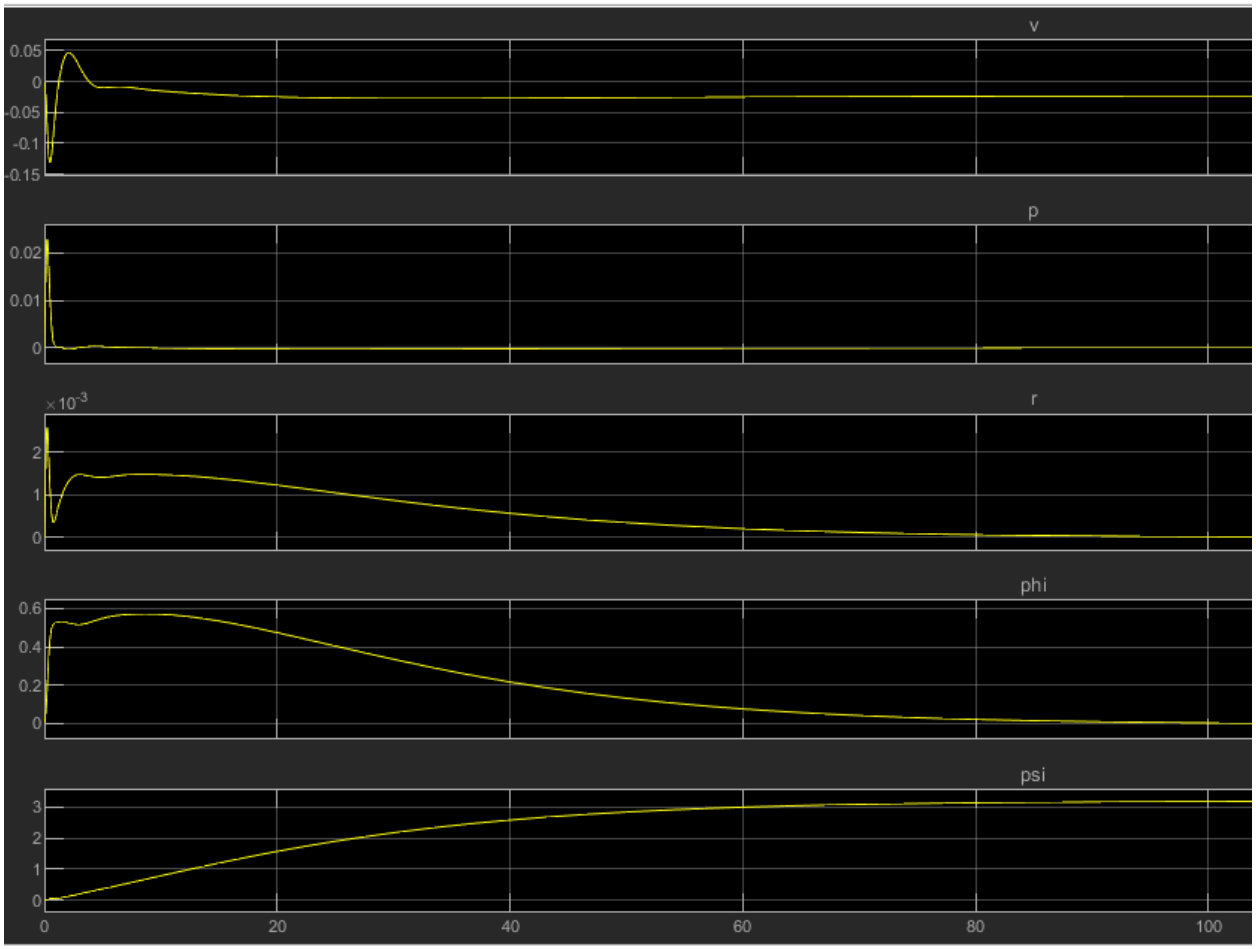

Lateral State Response (With PID Controller)

- We can observe that nearly **all states settle at zero**, only the **psi angle** settles approximately at **3 degrees** as expected.

- **Lateral State Response (Before applying the controller):**

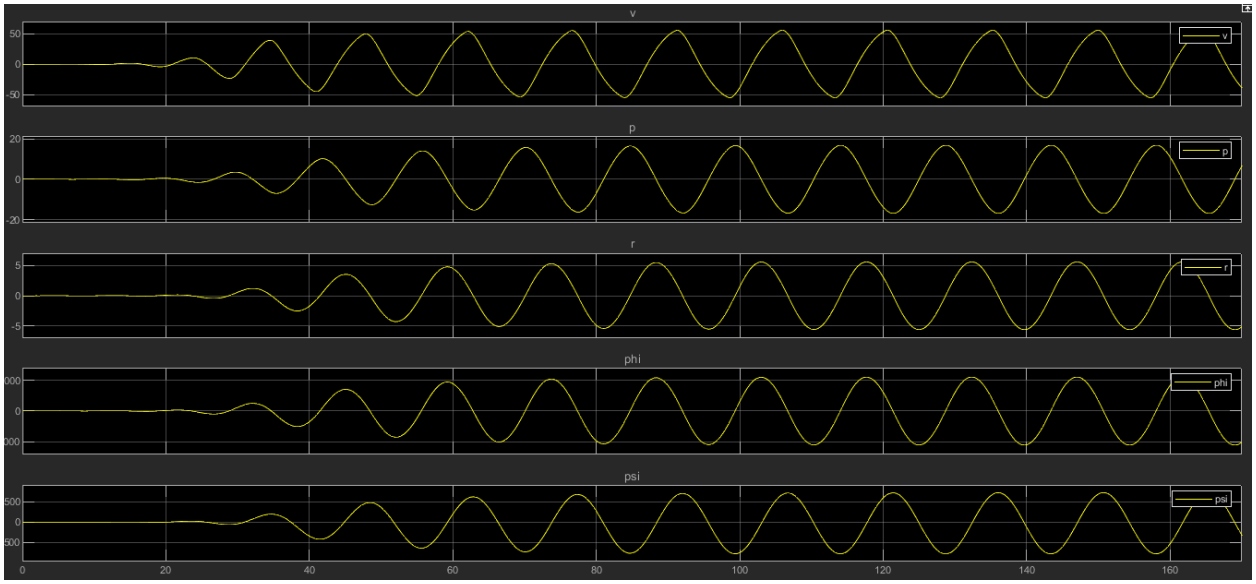

Lateral State Response (Without PID Controller)

- We can clearly see that without the autopilot controller any input to the system might cause it to **infinitely oscillate at a fixed amplitude.**

References

1. Smith, H. (n.d.). *Nondimensional Equations of Motion — Aircraft Flight Mechanics by Harry Smith, Ph.D.* Aircraft Flight Mechanics by Harry Smith, Ph.D. Retrieved June 23, 2022, from https://aircraftflightmechanics.com/Linearisation/Nondimensional.html
2. *Yaw damper design for a 747 jet aircraft*. Yaw Damper Design for a 747 Jet Aircraft - MATLAB & Simulink Example. (n.d.). Retrieved June 23, 2022, from https://www.mathworks.com/help/control/ug/yaw-damper-design-for-a-747-jet-aircraft.html;jsessionid=6a0c68104c2688163c254658938a