REF	SIZE	DESCRIPTION	MATERIAL	QTY
1	DN50	PIPE DN50 sch80	A106B	
2	DN80	PIPE DN80 sch80	A106B	
3	DN50	FLANGE DN50 RF WN sch80 150#	A105	4
4	DN80	FLANGE DN80 RF WN sch80 150#	A105	5
5	DN80 x DN50	REDUCER DN80x50 CONCENTRIC BW	A234 WPB	2
6	DN80	ELBOW DN80 90DEG LR BW	A234 WPB	6
7	DN80 x DN50	TEE REDUCING DN80x50 BW	A234 WPB	2
8	DN50	CONTROL VALVE DN50 RF 150#	CS	1
9	DN80	GATE VALVE DN80 RF 150#	CS	2
10	DN50	GLOBE VALVE DN50 RF 150#	CS	1
11	DN50	GASKET DN50 150# SPWD	304SS	4
12	DN80	GASKET DN80 150# SPWD	304SS	5
13	M16x70	STUD BOLT M16x85mm	A193 / A194	16
14	M16x75	STUD BOLT M16x90mm	A193 / A194	40

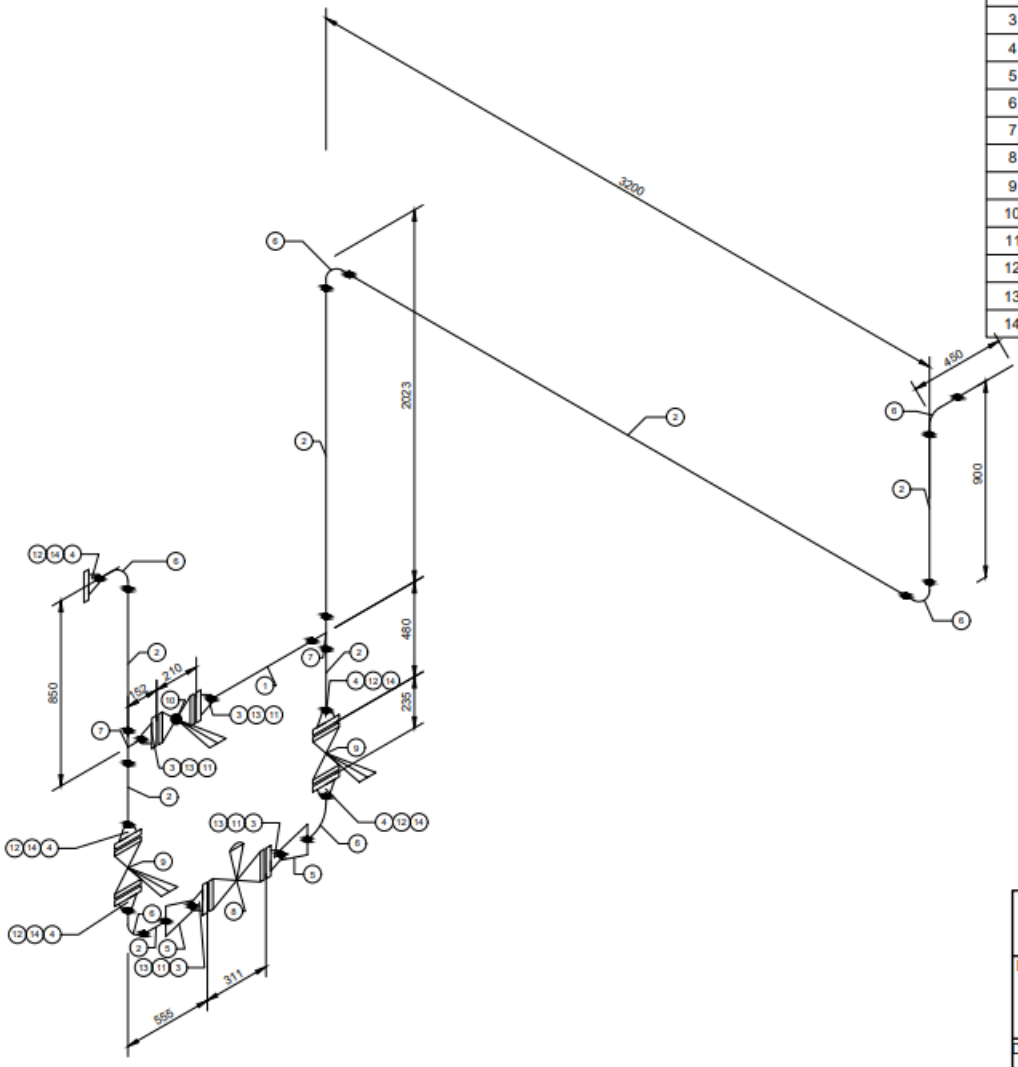

USQ PHOENIX INDUSTRIES

DRAWING TITLE

A2-PIPEWORK

DRAWN BY	BYRENN BIRCH	DRG NO. A2-Q4-S	A3
DATE	07 JUNE 2023		
SCALE	NTS		