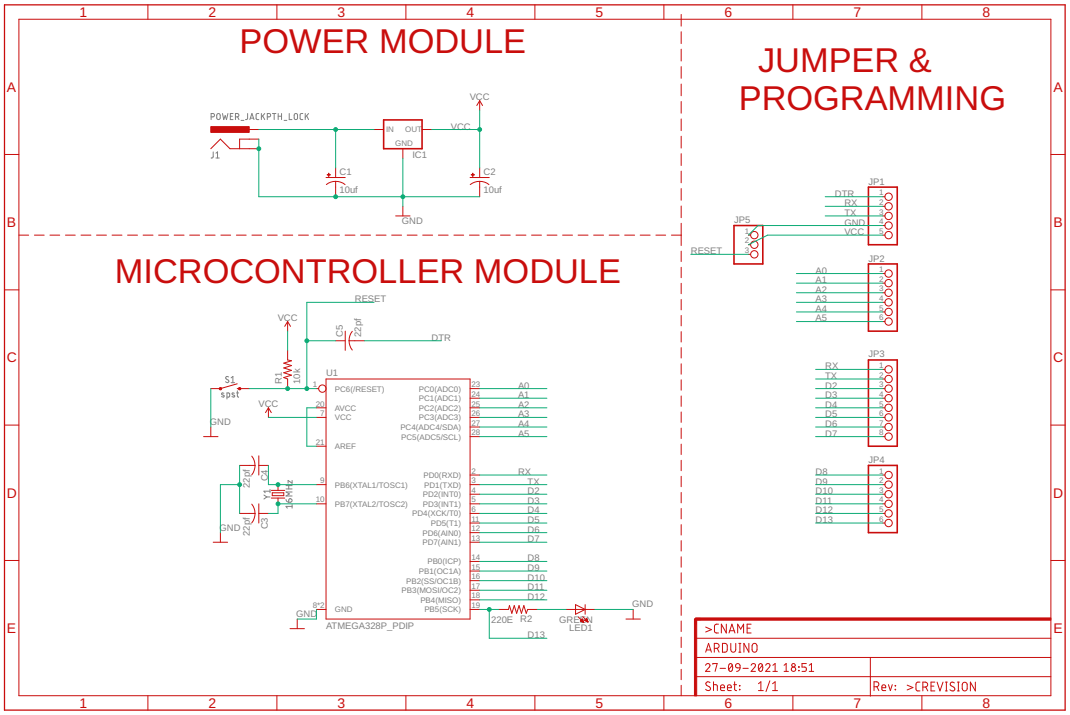

27-09-2021 18:57 f=0.50 C:\Users\ADMINN\Documents\EAGLE\designs\opam4\arduino\ARDUINO.sch (Sheet: 1/1)