FURNITURE LAYOUT

SCALE 1:75

GENERAL NOTES

1. This drawing shall be read in conjuction with all other relevant architectural,structural & electrical drawings including those of other consultants.
2. It is the responsability of contractors & manufacturers to check all relevant site dimensions prior to the start of construction or manufacture.
3. All materials and components must be installed on site in accordance with manufacturer's instructions , shop drawings and standard details.
4. All dimensions are in millemeters unless noted otherwise.
5. Full working drawings, specifications and samples are to be provided by Contractor/Supplier for approval prior to manufacture.

KEY PLAN

REV.#	GENERAL NOTES	DRAWN BY	CHECKED BY	APPROVED BY	DATE
J	REV. WITH CLOUD	AC	AM	SM	2023.01.16
I	REV. WITH CLOUD	MP	AM	SM	2022.11.16
H	GEN. REV.	MP	AM	SM	2022.10.27
G	REV. WITH CLOUD	MP	AM	SM	2022.08.31
F	REV. WITH CLOUD	MP	AM	SM	2022.08.30
E	REV. WITH CLOUD	AC	AM	SM	2022.06.26
D	GEN. REV.	AC	AM	SM	2022.06.14
C	GEN. REV.	AC	AM	SM	2022.06.09
B	GEN. REV	AC	AM	SM	2022.05.11
A	GEN. REV.	AC	AM	SM	2022.05.09
X	INITIAL ISSUE	AC	AM	SM	2022.04.26

PROJECT TITLE: ARCAPITA - ATLANTA

REFERENCE: ARC08 G

DRAWING TITLE: FURNITURE LAYOUT

DRAWING NUMBER: ID-101

REVISION: J

SCALE	FORMAT	ADDITIONAL NOTES	DESIGN DEVELOPMENT
1:75	A1		

SIMA MALAK + ALSSAMOURE
DESIGN ASSOCIATES
P.O. Box 15707 - Riyadh 11454 KSA
Tel. 01 441 4963 - Fax. 01 441 3867
simals@simals.com

©SIMA MALAK + ALSSAMOURE DESIGN ASSOCIATES (سما) 2003
This document including all drawing and text is the property and copyright of SIMA MALAK + ALSSAMOURE DESIGN ASSOCIATES for use solely with respect to this Project and shall not be copied or reproduced by any means except by agreement in writing from SIMA MALAK + ALSSAMOURE DESIGN ASSOCIATES.

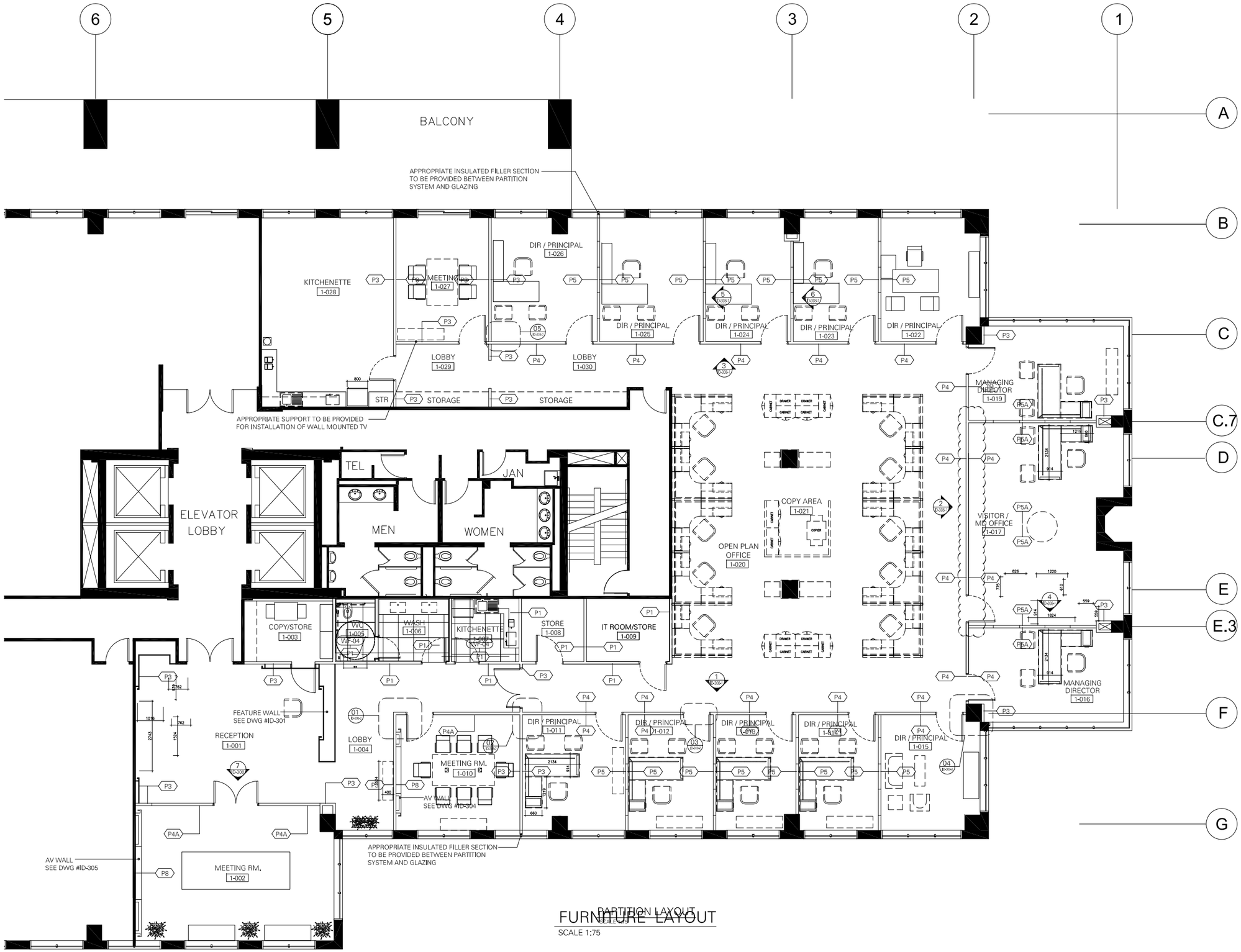

FURNITURE LAYOUT

SCALE 1:75

GENERAL NOTES

1. This drawing shall be read in conjuction with all other relevant architectural,structural & electrical drawings including those of other consultants.
2. It is the responsability of contractors & manufacturers to check all relevant site dimensions prior to the start of construction or manufacture.
3. All materials and components must be installed on site in accordance with manufacturer's instructions , shop drawings and standard details.
4. All dimensions are in millemeters unless noted otherwise.
5. Full working drawings, specifications and samples are to be provided by Contractor/Supplier for approval prior to manufacture.

PARTITION TYPE:

P1 - 100mm thick Blockwork.

P3 - Metal stud gypsum wall.

P4 - FULLY GLAZED PARTITION SYSTEM: Double glazed office partition wall system with Aluminum profiles. Fully glazed module. Frame in anodized aluminum silver finish as per approved sample. Equipment panel with back painted glass (MG-02).

P4A - FULLY GLAZED PARTITION SYSTEM: Double glazed office partition wall system with Aluminum profiles. Fully glazed module. Frame in anodized aluminum silver finish as per approved sample. Equipment panel with back painted glass (MG-02) glazing to have sandblasting /manifestation applied to faces inside of both layers of glazing.

P5 - PARTIALLY GLAZED PARTITION SYSTEM: Double glazed office partition wall system with Aluminum profiles. Partially glazed module consisting of double glazed upper panels and wood veneered lower panels (MW-02) with insulation, frame in anodized aluminum silver finish as per approved sample.

P8 - Metal stud Gypsum partition with fitted A/V wall consisting of wood paneling / Cabinetry.

NOTES:

*. All doors are to be solid plain leaf with wood veneered.

*. Partition supplier to conduct their own site survey to obtain asbuilt dimensions and submit plans, elevations and details for approval.

KEY PLAN

REV.#	GENERAL NOTES	DRAWN BY	CHECKED BY	APPROVED BY	DATE
D	REV. WITH CLOUD	MP	AM	SM	2022.11.16
C	REV. WITH CLOUD	MP	AM	SM	2022.10.27
B	REV. WITH CLOUD	MP	AM	SM	2022.08.17
A	GENERAL REV.	AC	AM	SM	2022.08.11
X	INITIAL ISSUE	AC	AM	SM	2022.06.02

PROJECT TITLE: ARCAPITA - ATLANTA

REFERENCE: ARC08 G

DRAWING TITLE: PARTITION LAYOUT

DRAWING NUMBER: ID-102

REVISION: D

SCALE	FORMAT	ADDITIONAL NOTES	DESIGN DEVELOPMENT
1:75	A1		

SIMA MALAK + ALSSAMOURE DESIGN ASSOCIATES
P.O. Box 15707 - Riyadh 11454 KSA
Tel. 01 441 4963 - Fax. 01 441 3867
simals@simals.com

©SIMA MALAK + ALSSAMOURE DESIGN ASSOCIATES (سما) 2003
This document including all drawing and text is the property and copyright of SIMA MALAK + ALSSAMOURE DESIGN ASSOCIATES for use solely with respect to this Project and shall not be copied or reproduced by any means except by agreement in writing from SIMA MALAK + ALSSAMOURE DESIGN ASSOCIATES.

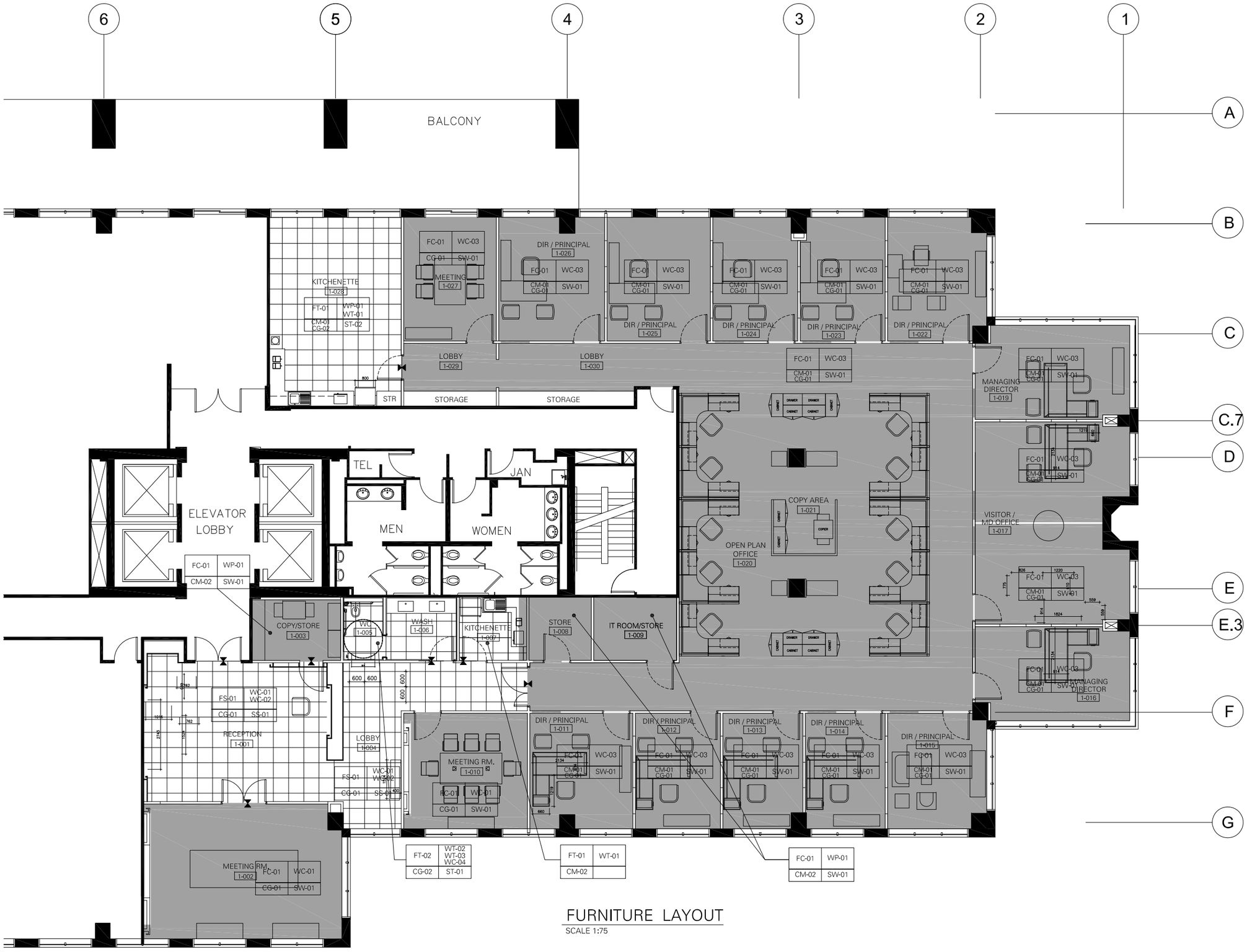

FURNITURE LAYOUT

SCALE 1:75

GENERAL NOTES

1. This drawing shall be read in conjuction with all other relevant architectural,structural & electrical drawings including those of other consultants.
2. It is the responsability of contractors & manufacturers to check all relevant site dimensions prior to the start of construction or manufacture.
3. All materials and components must be installed on site in accordance with manufacturer's instructions , shop drawings and standard details.
4. All dimensions are in millemeters unless noted otherwise.
5. Full working drawings, specifications and samples are to be provided by Contractor/Supplier for approval prior to manufacture.

KEY PLAN

REV.#	GENERAL NOTES	DRAWN BY	CHECKED BY	APPROVED BY	DATE
A	GENERAL REV.	MP	AM	SM	2022.08.18
	INITIAL ISSUE	AC	AM	SM	2022.08.11

PROJECT TITLE: ARCAPITA - ATLANTA

REFERENCE: ARC08 G

DRAWING TITLE: FINISHING LAYOUT

DRAWING NUMBER: ID-103

REVISION:

SCALE	FORMAT	ADDITIONAL NOTES	DESIGN DEVELOPMENT
1:75	A1		

SIMA MALAK + ALSSAMOURE
DESIGN ASSOCIATES
P.O. Box 15707 - Riyadh 11454 KSA
Tel. 01 441 4963 - Fax. 01 441 3867
simals@simals.com

©SIMA MALAK + ALSSAMOURE DESIGN ASSOCIATES (صمصم) 2003
This document including all drawing and text is the property and copyright of SIMA MALAK + ALSSAMOURE DESIGN ASSOCIATES for use solely with respect to this Project and shall not be copied or reproduced by any means except by agreement in writing from SIMA MALAK + ALSSAMOURE DESIGN ASSOCIATES.

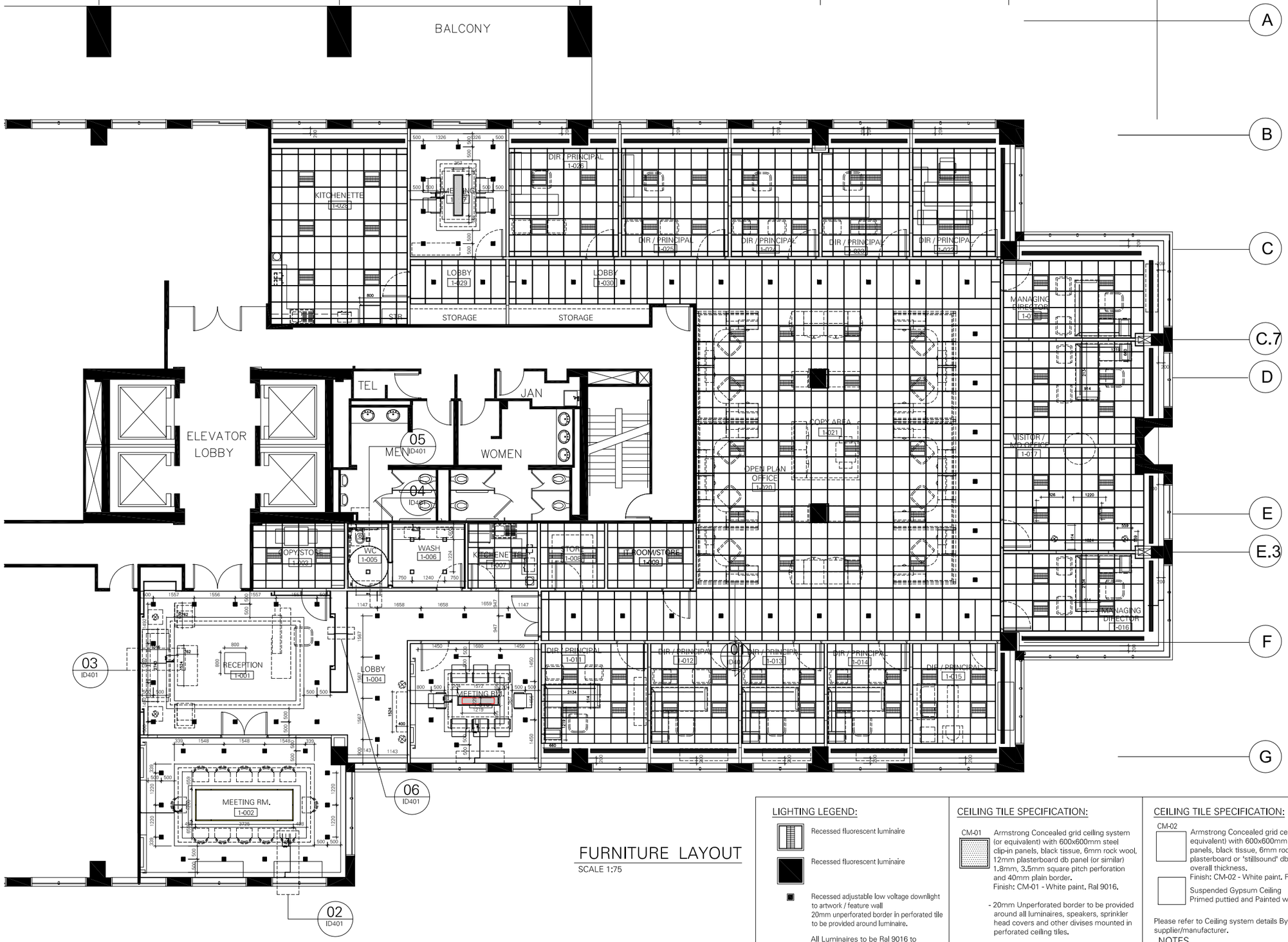

FURNITURE LAYOUT

SCALE 1:75

LIGHTING LEGEND:

- Recessed fluorescent luminaire
- Recessed fluorescent luminaire
- Recessed adjustable low voltage downlight to artwork / feature wall
  20mm unperforated border in perforated tile to be provided around luminaire.

All Luminaires to be Ral 9016 to co-ordinate with ceiling system.

- Continuos liner lighting (Corridor)
- Decorative light fittings
- Decorative light fittings
- Concealed LED Strip Light

CEILING TILE SPECIFICATION:

CM-01

Armstrong Concealed grid ceiling system (or equivalent) with 600x600mm steel clip-in panels, black tissue, 6mm rock wool, 12mm plasterboard db panel (or similar) 1.8mm, 3.5mm square pitch perforation and 40mm plain border.
Finish: CM-01 - White paint. Ral 9016.

- 20mm Unperforated border to be provided around all luminaires, speakers, sprinkler head covers and other divises mounted in perforated ceiling tiles.

- If integrated luminaires are not used a suitable recess should be provided so that the fitting is installed flush with the ceiling

- Speakers and Sprinkler head covers should also be mounted in a corresponding recess so that they are flush with the ceiling.

Full Shop drawings and details to be provided by Contractor / Manufacturer.

CEILING TILE SPECIFICATION:

CM-02

Armstrong Concealed grid ceiling system (or equivalent) with 600x600mm steel clip-in panels, black tissue, 6mm rock wool, 12mm plasterboard or 'stillsound' db panel, 16mm overall thickness.
Finish: CM-02 - White paint. RAL. 9016.

Suspended Gypsum Ceiling
Primed puttied and Painted white. RAL. 9016.

Please refer to Ceiling system details By Ceiling supplier/manufacturer.

NOTES
- All ceiling levels taken from FFL.
- Unless noted otherwise all ceiling levels are +2.70m. from FFL.

GENERAL NOTES

1. This drawing shall be read in conjuction with all other relevant architectural,structural & electrical drawings including those of other consultants.
2. It is the responsability of contractors & manufacturers to check all relevant site dimensions prior to the start of construction or manufacture.
3. All materials and components must be installed on site in accordance with manufacturer's instructions , shop drawings and standard details.
4. All dimensions are in millemeters unless noted otherwise.
5. Full working drawings, specifications and samples are to be provided by Contractor/Supplier for approval prior to manufacture.

NOTES FOR MANUFACTURE:

* Construction methods shown on drawings are suggested methods only.
* Full working drawings and samples are to be provided by contractor for approval prior to manufacture.

*Please refer to relevant sub consultants drawings for Audio visual, security and I.T. requirements.

FINISHES

* All Elements of the ceiling including AC Grill and ceiling mounted devices should be Ral 9016.
* Samples of all finishes are to be provided by the contractor to be approved by the designer prior to manufacture / construction.

Full Shop drawings and details to be provided by Contractor / Manufacturer.

KEY PLAN

REV.#	GENERAL NOTES	DRAWN BY	CHECKED BY	APPROVED BY	DATE
D	GENERAL REV.	MP	AM	SM	2022.09.01
C	REV. CALLOUTS	MP	AM	SM	2022.08.17
B	REV. WITH CLOUD	AC	AM	SM	2022.06.27
A	TOILET REV.	AC	AM	SM	2022.06.15
X	INITIAL ISSUE	AC	AM	SM	2022.06.08

PROJECT TITLE: ARCAPITA - ATLANTA
REFERENCE: ARC08 G

DRAWING TITLE: REFLECTED CEILING PLAN

DRAWING NUMBER: ID-201
REVISION: B

SCALE	FORMAT	ADDITIONAL NOTES	DESIGN DEVELOPMENT
1:75	A1		

SIMA MALAK + ALSSAMOURE
DESIGN ASSOCIATES
P.O. Box 15707 - Riyadh 11454 KSA
Tel. 01 441 4963 - Fax. 01 441 3867
simals@simals.com

©SIMA MALAK + ALSSAMOURE DESIGN ASSOCIATES (سما) 2003
This document including all drawing and text is the property and copyright of SIMA MALAK + ALSSAMOURE DESIGN ASSOCIATES for use solely with respect to this Project and shall not be copied or reproduced by any means except by agreement in writing from SIMA MALAK + ALSSAMOURE DESIGN ASSOCIATES.

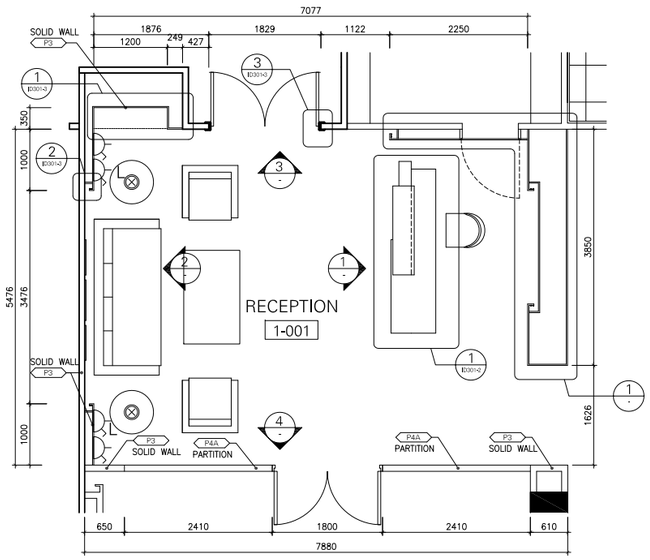

1 RECEPTION PLAN
SCALE 1:50

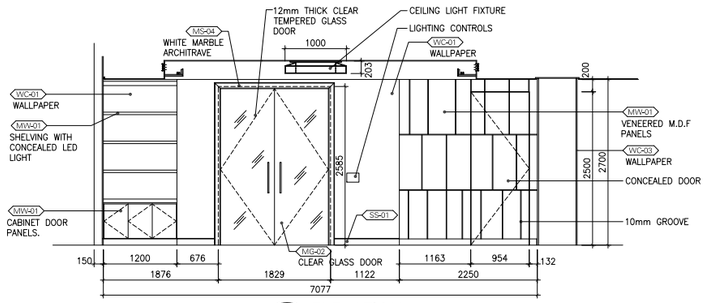

3 ELEVATION
SCALE 1:50

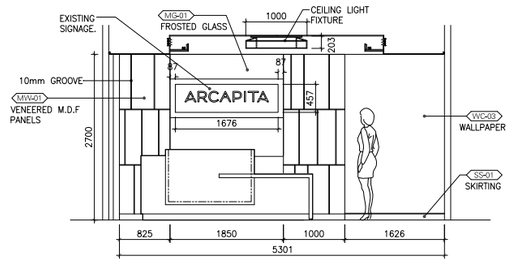

1 ELEVATION
SCALE 1:50

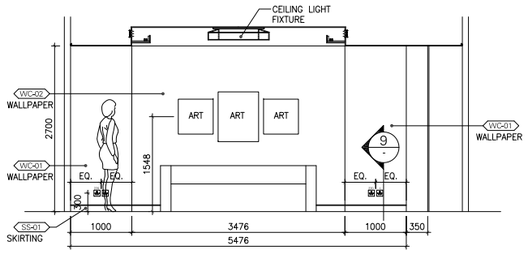

2 ELEVATION
SCALE 1:50

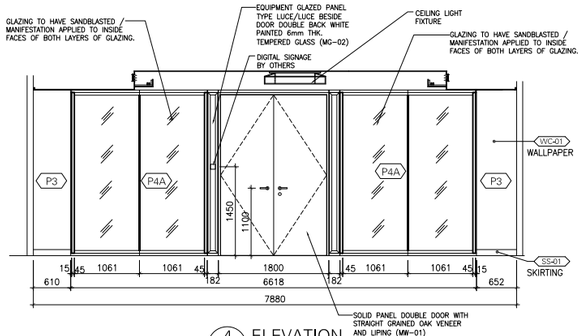

4 ELEVATION
SCALE 1:50

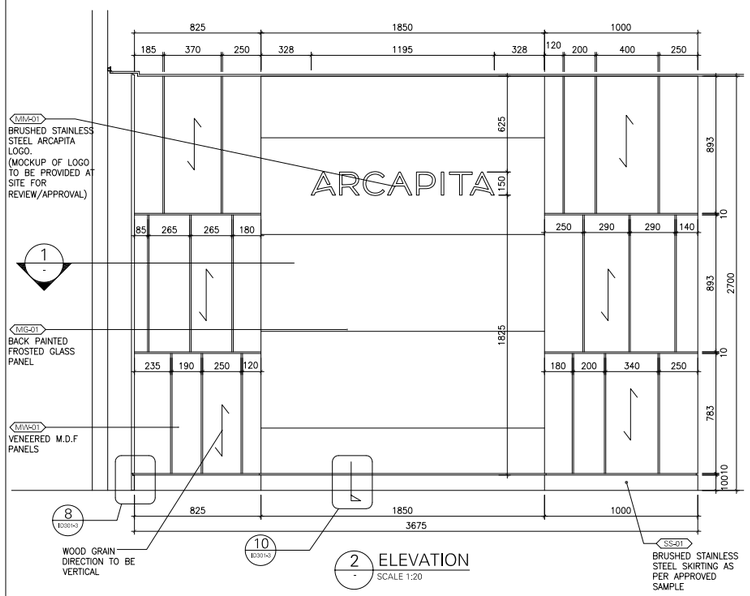

2 ELEVATION
SCALE 1:20

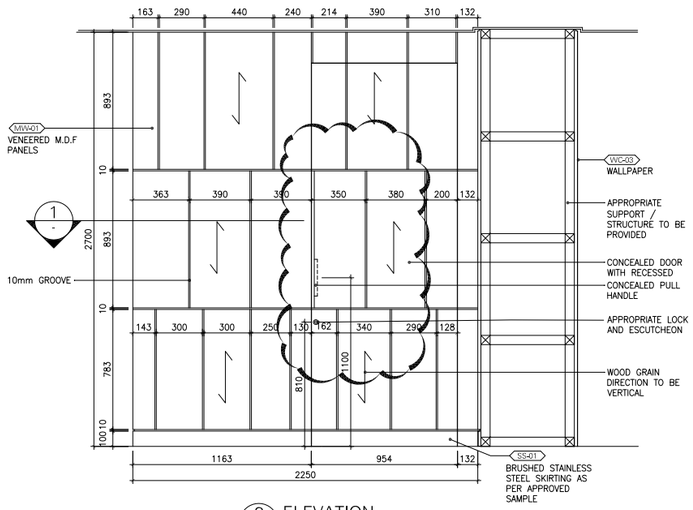

3 ELEVATION
SCALE 1:20

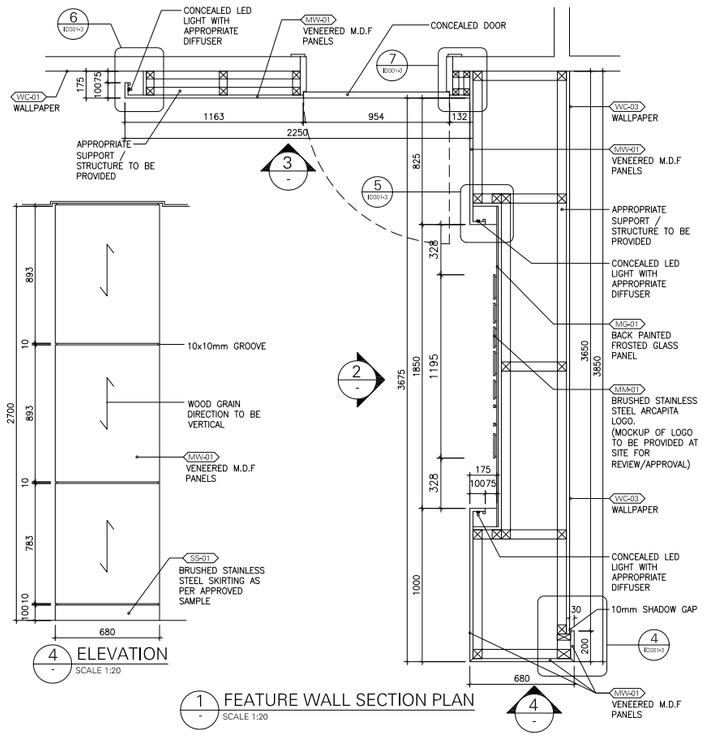

4 ELEVATION
SCALE 1:20

1 FEATURE WALL SECTION PLAN
SCALE 1:20

GENERAL NOTES

1. This drawing shall be read in conjuction with all other relevant architectural,structural & electrical drawings including those of other consultants.
2. It is the responsability of contractors & manufacturers to check all relevant site dimensions prior to the start of construction or manufacture.
3. All materials and components must be installed on site in accordance with manufacturer's instructions , shop drawings and standard details.
4. All dimensions are in millemeters unless noted otherwise.
5. Full working drawings, specifications and samples are to be provided by Contractor/Supplier for approval prior to manufacture.

FINISHES

* Please Refer to Finishing Schedule for full specifications:
ARC08-1-3 FIN

KEY PLAN

REV.#	GENERAL NOTES	DRAWN BY	CHECKED BY	APPROVED BY	DATE
A	REV. WITH CLOUD	AC	AM	SM	2022.10.28
	INITIAL ISSUE	MP	AM	SM	2022.08.11

PROJECT TITLE	REFERENCE
ARC - ATLANTA	ARC08 G

DRAWING TITLE
RECEPTION (1-001)
PLAN AND ELEVATIONS
AND BACK WALL DETAILS

DRAWING NUMBER	REVISION
ID-301-1	A

SCALE	FORMAT	ADDITIONAL NOTES	DESIGN DEVELOPMENT
1:50 / 1:20	A1		

SIMA MALAK + ALSSAMOURE
DESIGN ASSOCIATES
P.O. Box 15707 - Riyadh 11454 KSA
Tel. 01 441 4963 - Fax. 01 441 3867
simals@simals.com

©SIMA MALAK + ALSSAMOURE DESIGN ASSOCIATES (سما) 2003
This document including all drawing and text is the property and copyright of SIMA MALAK + ALSSAMOURE DESIGN ASSOCIATES for use solely with respect to this Project and shall not be copied or reproduced by any means except by agreement in writing from SIMA MALAK + ALSSAMOURE DESIGN ASSOCIATES.

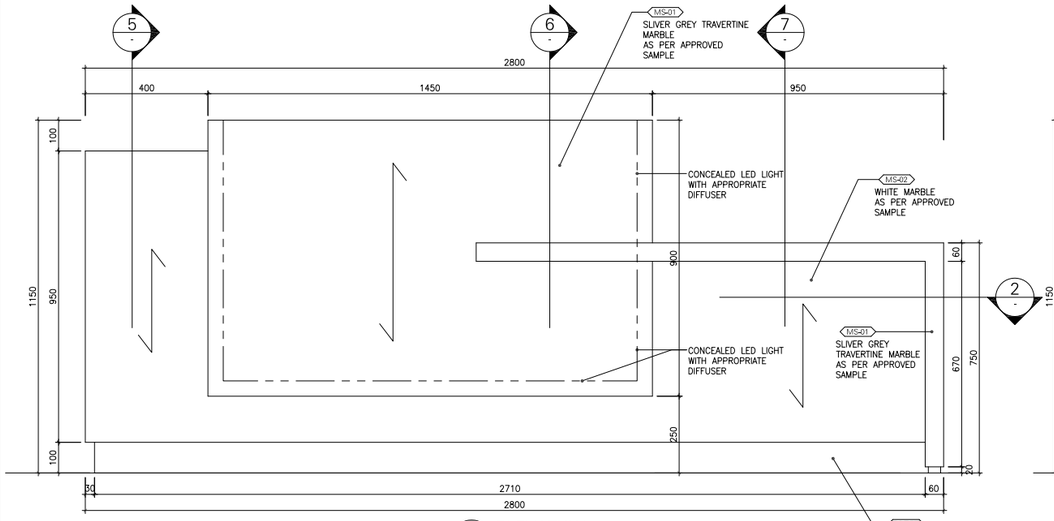

3 ELEVATION
SCALE 1:10

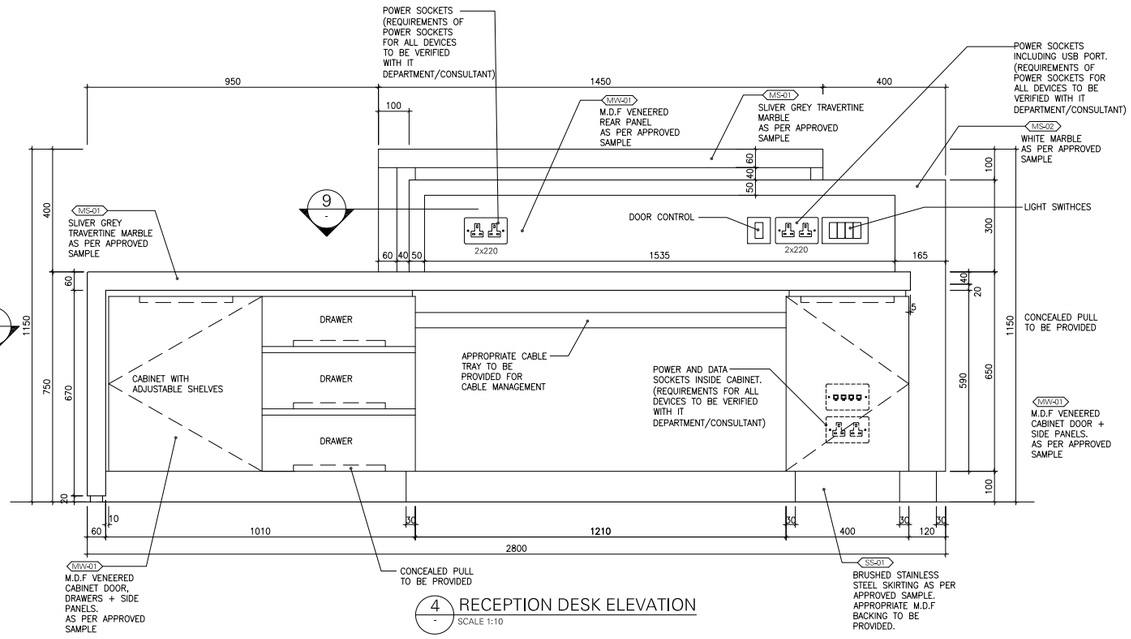

4 RECEPTION DESK ELEVATION
SCALE 1:10

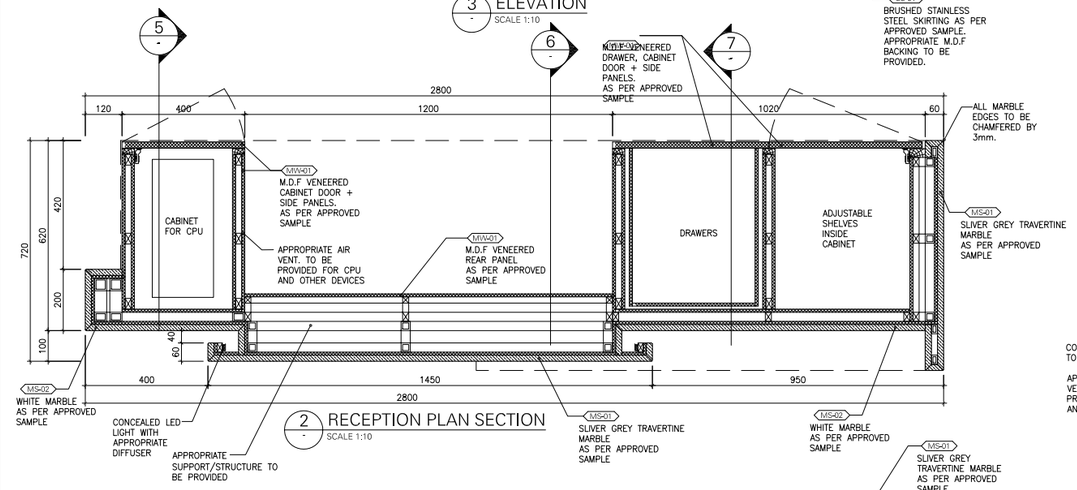

2 RECEPTION PLAN SECTION
SCALE 1:10

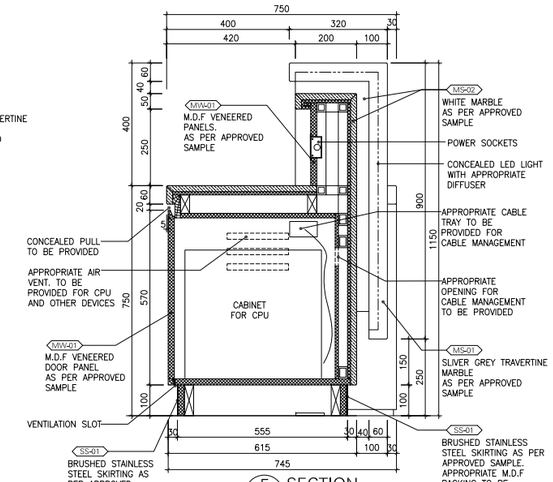

5 SECTION
SCALE 1:10

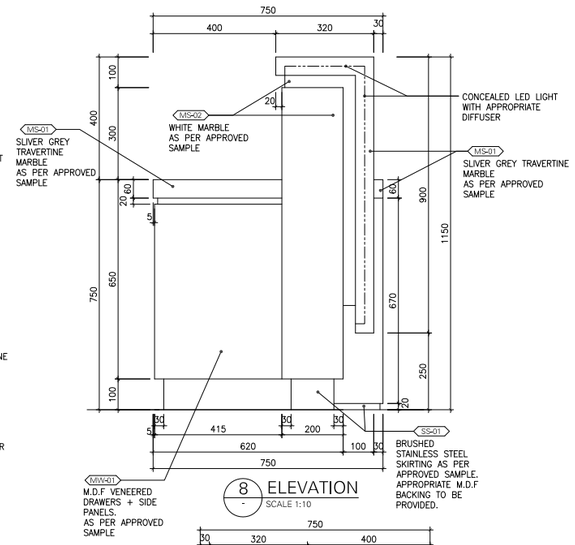

8 ELEVATION
SCALE 1:10

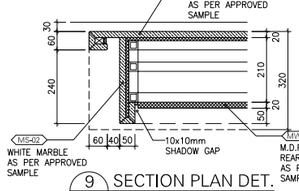

9 SECTION PLAN DET.
SCALE 1:10

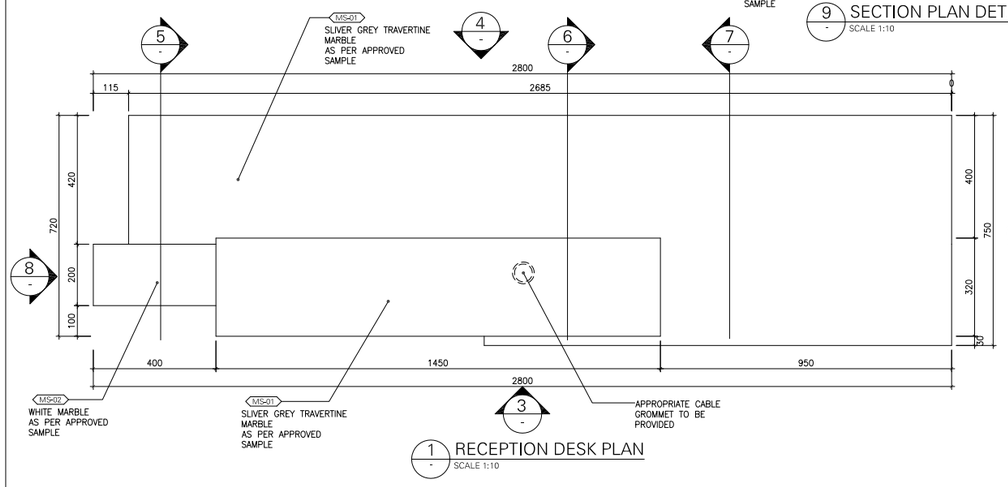

1 RECEPTION DESK PLAN
SCALE 1:10

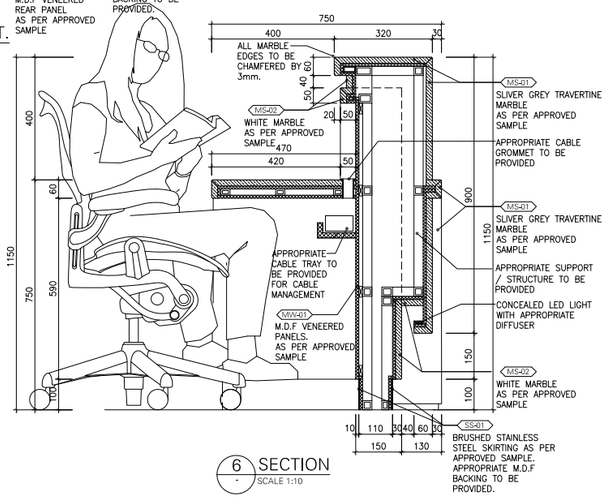

6 SECTION
SCALE 1:10

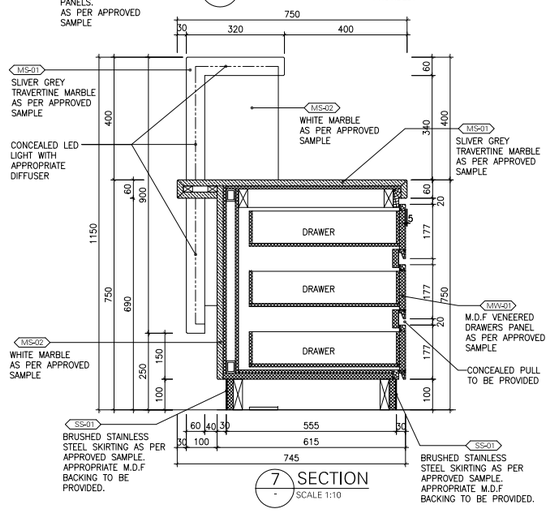

7 SECTION
SCALE 1:10

GENERAL NOTES

1. This drawing shall be read in conjuction with all other relevant architectural,structural & electrical drawings including those of other consultants.
2. It is the responsability of contractors & manufacturers to check all relevant site dimensions prior to the start of construction or manufacture.
3. All materials and components must be installed on site in accordance with manufacturer's instructions , shop drawings and standard details.
4. All dimensions are in millemeters unless noted otherwise.
5. Full working drawings, specifications and samples are to be provided by Contractor/Supplier for approval prior to manufacture.

NOTES FOR MANUFACTURER:

* Construction methods shown on drawings are suggested methods only.
* Construction methods must be discussed between designer and manufacturer prior to Fabrication.
* All details must be adhered to any deviation must be discussed with the designer prior to manufacture.
* Structure to be specified by manufacturer considering practicalities and the aesthetics of the design.
* All dimensions are shown using standard thickness, please allow veneer thickness when considering fitted elements.

FINISHES

* Please Refer to Finishing Schedule for full specifications:
ARC08-1-3 FIN

NOTES :

* REQUIREMENTS FOR ALL DEVICES AND CABLE MANAGEMENT TO BE VERIFIED WITH IT DEPARTMENT/CONSULTANT.

KEY PLAN

REV.#	GENERAL NOTES	DRAWN BY	CHECKED BY	APPROVED BY	DATE
A	GENERAL REV.	MP	AM	SM	2022.10.31
X	INITIAL ISSUE	MP	AM	SM	2022.08.11

PROJECT TITLE	REFERENCE
ARC - ATLANTA	ARC08 G

DRAWING TITLE

RECEPTION (1-001)
DESK PLAN ELEVATION AND SECTIONS

DRAWING NUMBER	REVISION
ID-301-2	A

SCALE	FORMAT	ADDITIONAL NOTES	DESIGN DEVELOPMENT
1:10	A1		

SIMA MALAK + ALSSAMOURE
DESIGN ASSOCIATES
P.O. Box 15707 - Riyadh 11454 KSA
Tel. 01 441 4963 - Fax. 01 441 3867
simals@simals.com

©SIMA MALAK + ALSSAMOURE DESIGN ASSOCIATES (سما) 2003
This document including all drawing and text is the property and copyright of SIMA MALAK + ALSSAMOURE DESIGN ASSOCIATES for use solely with respect to this Project and shall not be copied or reproduced by any means except by agreement in writing from SIMA MALAK + ALSSAMOURE DESIGN ASSOCIATES.

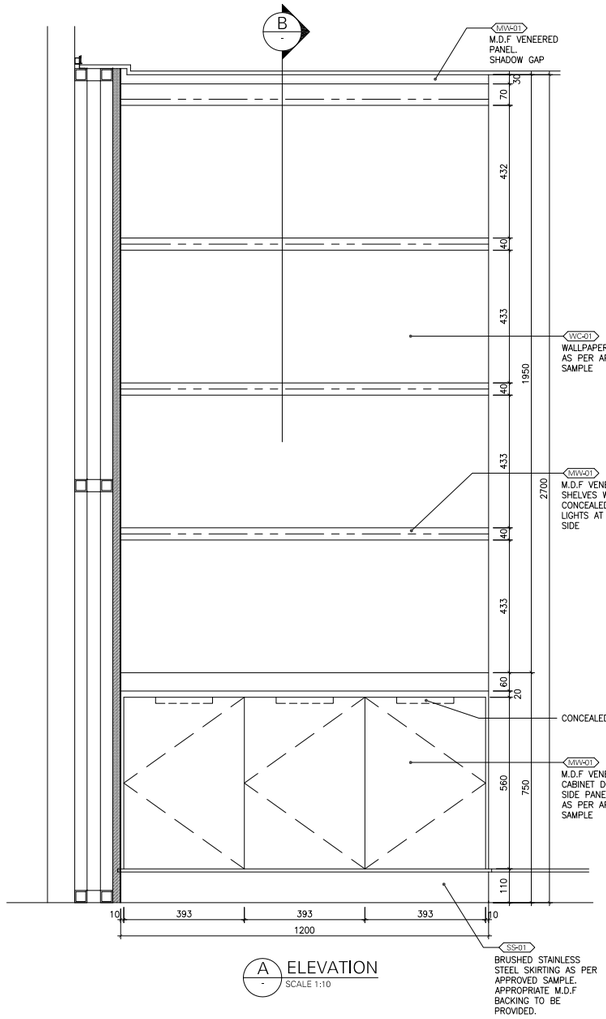

A ELEVATION
SCALE 1:10

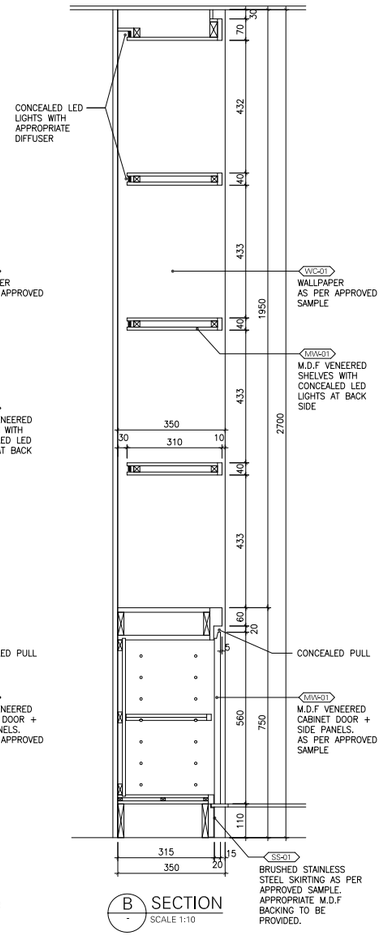

B SECTION
SCALE 1:10

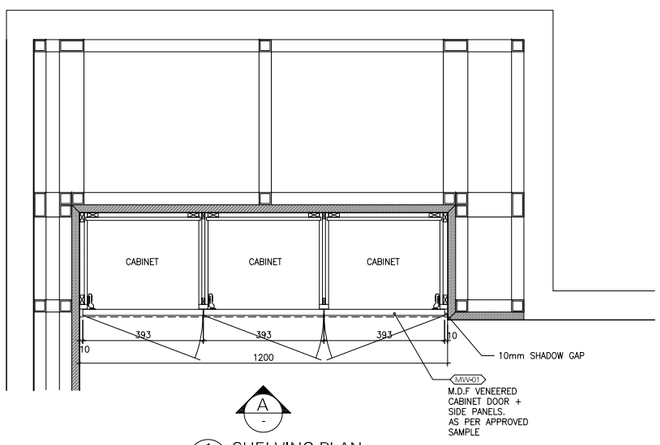

1 SHELVING PLAN
SCALE 1:10

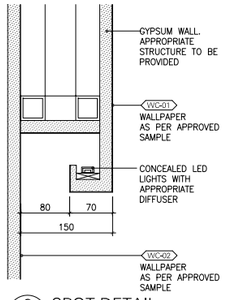

2 SPOT DETAIL
SCALE 1:5

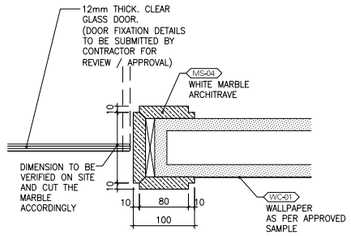

3 SPOT DETAIL
SCALE 1:5

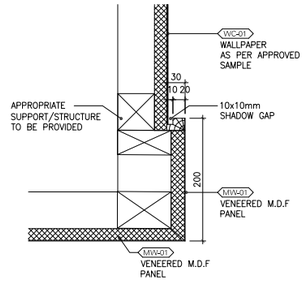

4 SPOT DETAIL
SCALE 1:5

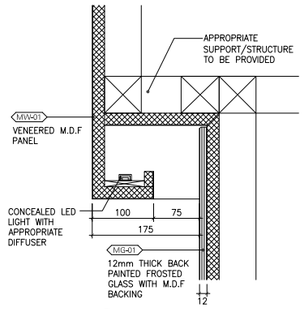

5 SPOT DETAIL
SCALE 1:5

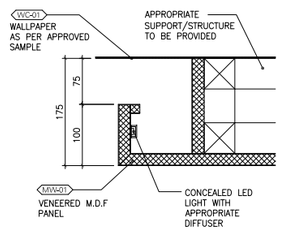

6 SPOT DETAIL
SCALE 1:5

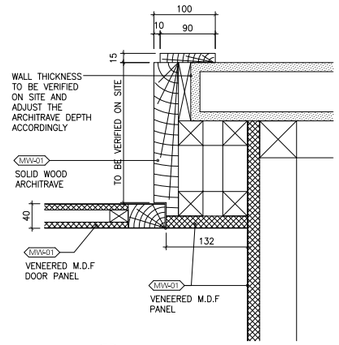

7 SPOT DETAIL
SCALE 1:5

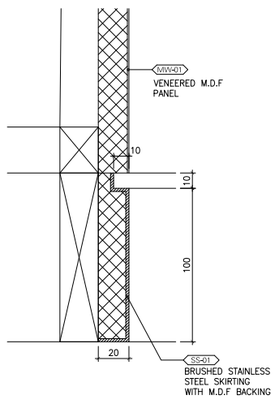

8 SKIRTING DETAIL
SCALE 1:2

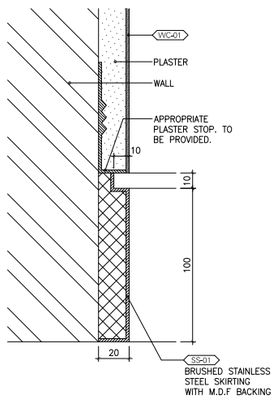

9 SKIRTING DETAIL
SCALE 1:2

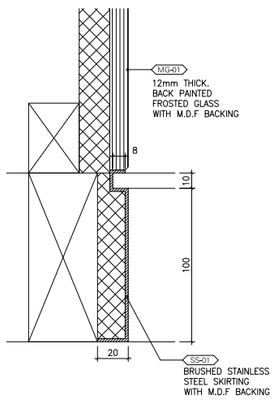

10 SKIRTING DETAIL
SCALE 1:2

GENERAL NOTES

1. This drawing shall be read in conjuction with all other relevant architectural,structural & electrical drawings including those of other consultants.
2. It is the responsability of contractors & manufacturers to check all relevant site dimensions prior to the start of construction or manufacture.
3. All materials and components must be installed on site in accordance with manufacturer's instructions , shop drawings and standard details.
4. All dimensions are in millemeters unless noted otherwise.
5. Full working drawings, specifications and samples are to be provided by Contractor/Supplier for approval prior to manufacture.

NOTES FOR MANUFACTURER:

* Construction methods shown on drawings are suggested methods only.
* Construction methods must be discussed between designer and manufacturer prior to Fabrication.
* All details must be adhered to any deviation must be discussed with the designer prior to manufacture.
* Structure to be specified by manufacturer considering practicalities and the aesthetics of the design.
* All dimensions are shown using standard thickness, please allow veneer thickness when considering fitted elements.

FINISHES

* Please Refer to Finishing Schedule for full specifications:
ARC08-1-3 FIN

NOTES :

* REQUIREMENTS FOR ALL DEVICES AND CABLE MANAGEMENT TO BE VERIFIED WITH IT DEPARTMENT/CONSULTANT.

KEY PLAN

REV.#	GENERAL NOTES	DRAWN BY	CHECKED BY	APPROVED BY	DATE
	INITIAL ISSUE	MP	AM	SM	2022.08.11

PROJECT TITLE	REFERENCE
ARC - ATLANTA	ARC08 G

DRAWING TITLE
RECEPTION (1-001) DETAILS

DRAWING NUMBER	REVISION
ID-301-3	-

SCALE	FORMAT	ADDITIONAL NOTES	DESIGN DEVELOPMENT
1:10	A1		

SIMA MALAK + ALSSAMOURE
DESIGN ASSOCIATES
P.O. Box 15707 - Riyadh 11454 KSA
Tel. 01 441 4963 - Fax. 01 441 3867
simals@simals.com

©SIMA MALAK + ALSSAMOURE DESIGN ASSOCIATES (ـــــــ) 2003
This document including all drawing and text is the property and copyright of SIMA MALAK + ALSSAMOURE DESIGN ASSOCIATES for use solely with respect to this Project and shall not be copied or reproduced by any means except by agreement in writing from SIMA MALAK + ALSSAMOURE DESIGN ASSOCIATES.

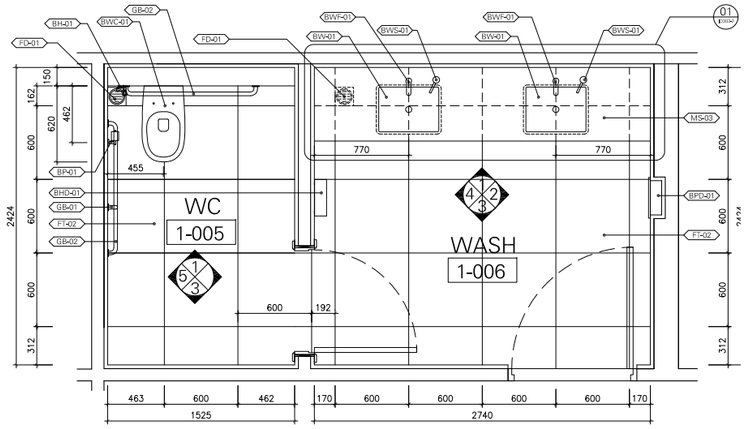

WASHROOM(1-006) + WC(1-005) PLAN

SCALE 1:25

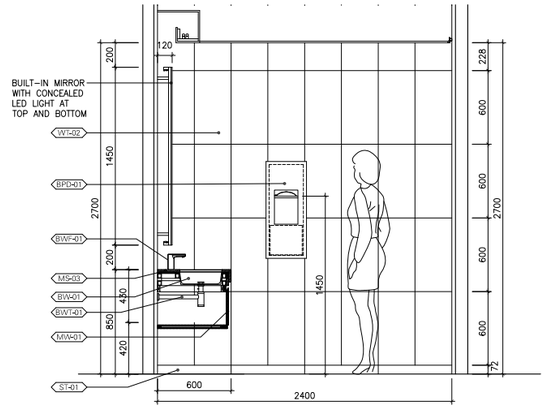

ELEVATION - 2

SCALE 1:25

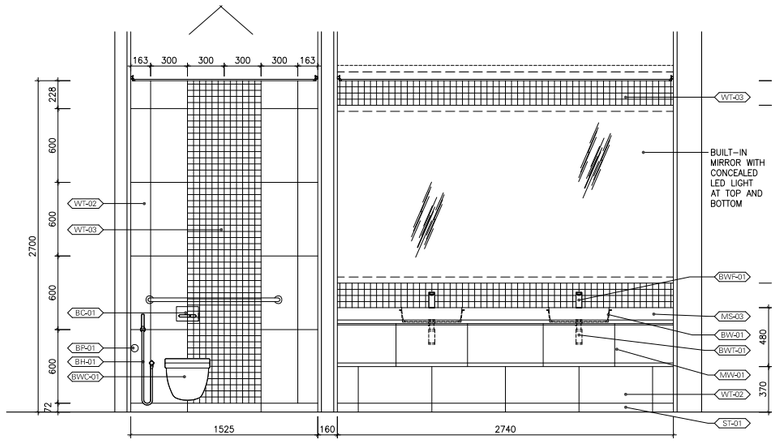

ELEVATION - 1

SCALE 1:25

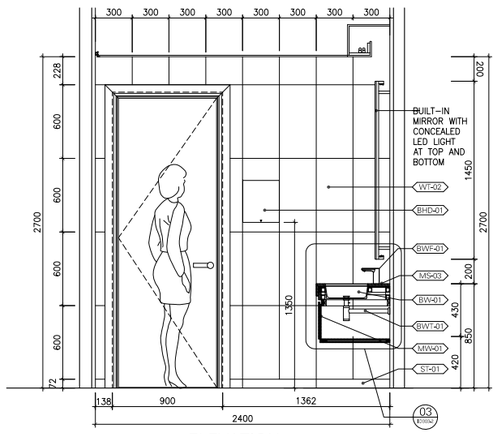

ELEVATION - 4

SCALE 1:25

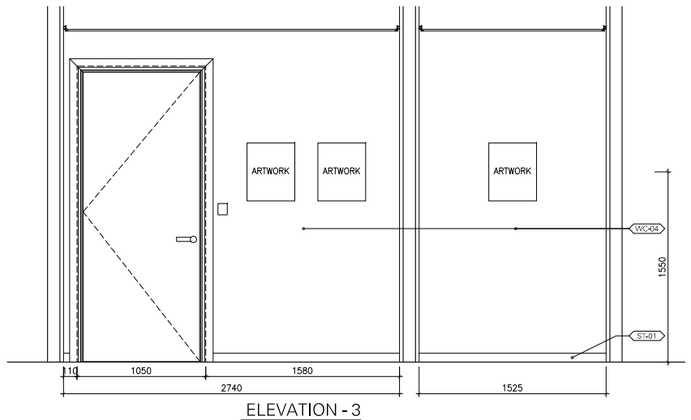

ELEVATION - 3

SCALE 1:25

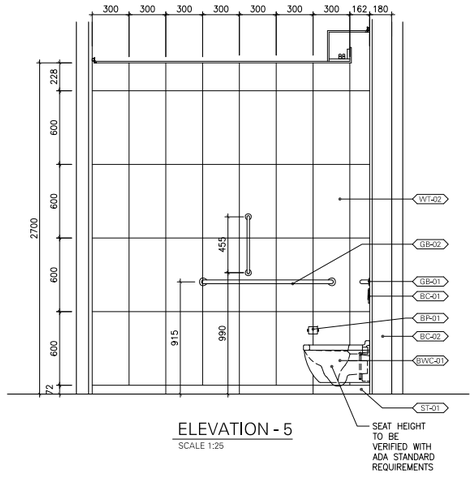

ELEVATION - 5

SCALE 1:25

GENERAL NOTES

1. This drawing shall be read in conjuction with all other relevant architectural,structural & electrical drawings including those of other consultants.
2. It is the responsability of contractors & manufacturers to check all relevant site dimensions prior to the start of construction or manufacture.
3. All materials and components must be installed on site in accordance with manufacturer's instructions , shop drawings and standard details.
4. All dimensions are in millemeters unless noted otherwise.
5. Full working drawings, specifications and samples are to be provided by Contractor/Supplier for approval prior to manufacture.
6. Appropriate slope for the flooring to the drain to be provided by Contractor.

NOTES FOR MANUFACTURER:

* Construction methods shown on drawings are suggested methods only.
* All Fixing & Screws to be concealed. If not possible manufacturer to consult with designers before manufacture.
* All site dimension to be confirmed by contractor prior to the manufacture of items.
* All materials used in bathrooms to be water resistant, moisture, rust and mould treated such as marine ply , stainless steel, aluminum or equivalent.
* All joints to be water sealed and water proof membrane to be provided as required.
* All glass and mirrors to have polished smooth edges all round.
* All Bathrooms, washrooms floors and steps to be in Hond non slip finish.

FINISHES

1. Full working drawings, specifications and samples are to be provided by Contractor/Supplier for approval prior to manufacture.
2. Please Refer to Finishing Schedule and Sanitary Schedule for full specifications:
ARC08.1.3.FIN
ARC08.1.3.WC-01

ACCESSORIES

1. All positions of sanitary accessories including towel rails, mirrors & artwork etc. to be confirmed on site and fixed after final approval.
2. Finishes will continue behind loose furniture fixtures, ie.mirrors and art works etc.

KEY PLAN

TYPICAL SOCKET POSITIONS :

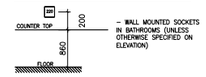

TYPICAL SWITCH POSITIONS :

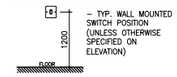

REV.#	GENERAL NOTES	DRAWN BY	CHECKED BY	APPROVED BY	DATE
	INITIAL ISSUE	MP	AM	SM	2022.07.18

PROJECT TITLE: ARCAPITA - ATLANTA

REFERENCE: ARC08 G

DRAWING TITLE: RESTROOM (1-005+1-006) PLAN, ELEVATIONS AND DETAILS

DRAWING NUMBER: ID-303-1

REVISION: -

SCALE	FORMAT	ADDITIONAL NOTES	DESIGN DEVELOPMENT
1:25	A1		

SIMA MALAK + ALSSAMOURE
DESIGN ASSOCIATES
P.O. Box 15707 - Riyadh 11454 KSA
Tel. 01 441 4963 - Fax. 01 441 3867
simals@simals.com

©SIMA MALAK + ALSSAMOURE DESIGN ASSOCIATES (ـــمـــ) 2003
This document including all drawing and text is the property and copyright of SIMA MALAK + ALSSAMOURE DESIGN ASSOCIATES for use solely with respect to this Project and shall not be copied or reproduced by any means except by agreement in writing from SIMA MALAK + ALSSAMOURE DESIGN ASSOCIATES.

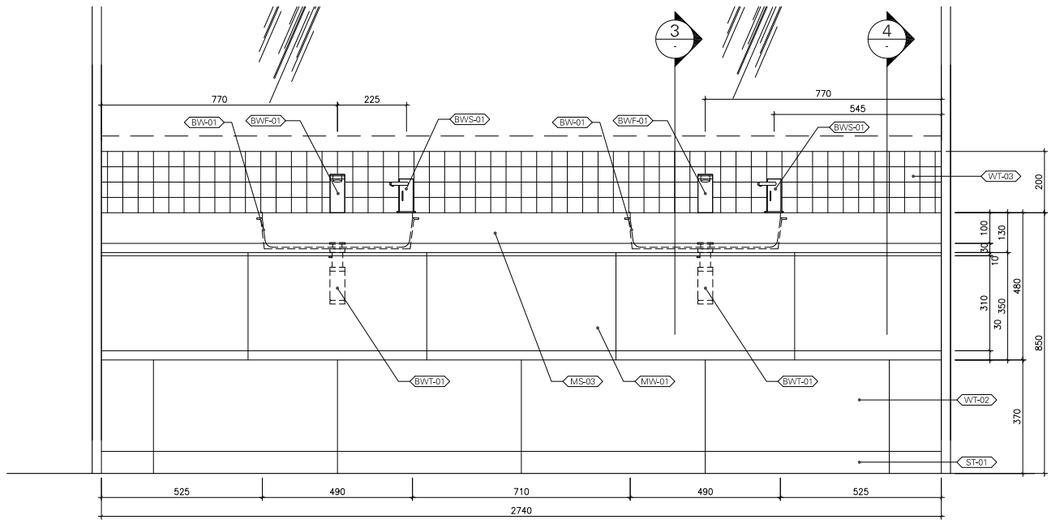

2 VANITY ELEVATION
SCALE 1:10

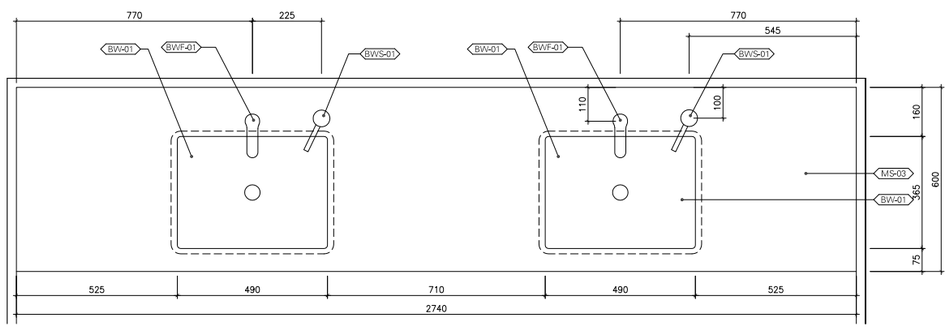

1 VANITY PLAN
SCALE 1:10

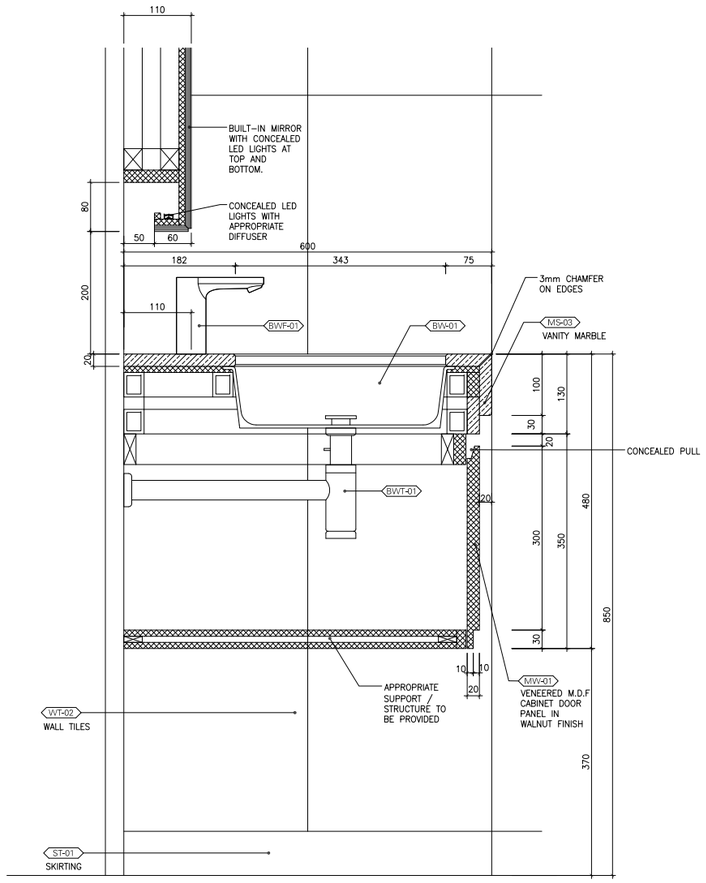

3 VANITY SECTION
SCALE 1:5

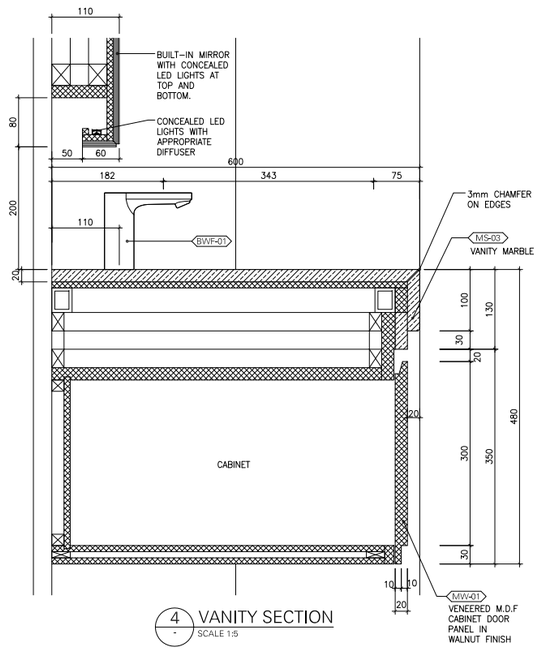

4 VANITY SECTION
SCALE 1:5

GENERAL NOTES

1. This drawing shall be read in conjuction with all other relevant architectural,structural & electrical drawings including those of other consultants.
2. It is the responsability of contractors & manufacturers to check all relevant site dimensions prior to the start of construction or manufacture.
3. All materials and components must be installed on site in accordance with manufacturer's instructions , shop drawings and standard details.
4. All dimensions are in millemeters unless noted otherwise.
5. Full working drawings, specifications and samples are to be provided by Contractor/Supplier for approval prior to manufacture.
6. Appropriate slope for the flooring to the drain to be provided by Contractor.

NOTES FOR MANUFACTURER:

* Construction methods shown on drawings are suggested methods only.
* All Fixing & Screws to be concealed. If not possible manufacturer to consult with designers before manufacture.
* All site dimension to be confirmed by contractor prior to the manufacture of items.
* All materials used in bathrooms to be water resistant, moisture, rust and mould treated such as marine ply , stainless steel, aluminum or equivalent.
* All joints to be water sealed and water proof membrane to be provided as required.
* All glass and mirrors to have polished smooth edges all round.
* All Bathrooms, washrooms floors and steps to be in Hond non slip finish.

FINISHES

1. Full working drawings, specifications and samples are to be provided by Contractor/Supplier for approval prior to manufacture.
2. Please Refer to Finishing Schedule and Sanitary Schedule for full specifications:
ARC08.1.3.FIN
ARC08.1.3.WC-01

ACCESSORIES

1. All positions of sanitary accessories including towel rails, mirrors & artwork etc. to be confirmed on site and fixed after final approval.
2. Finishes will continue behind loose furniture fixtures. ie.mirrors and art works etc.

KEY PLAN

REV.#	GENERAL NOTES	DRAWN BY	CHECKED BY	APPROVED BY	DATE
	INITIAL ISSUE	MP	AM	SM	2022.08.08

PROJECT TITLE: ARCAPITA - ATLANTA
REFERENCE: ARC08 G

DRAWING TITLE: WASHROOM (1-006) VANITY DETAILS

DRAWING NUMBER: ID-303-2
REVISION: -

SCALE	FORMAT	ADDITIONAL NOTES	DESIGN DEVELOPMENT
1:10, 1:5	A1		

SIMA MALAK + ALSSAMOURE
DESIGN ASSOCIATES
P.O. Box 15707 - Riyadh 11454 KSA
Tel. 01 441 4963 - Fax. 01 441 3867
simals@simals.com

©SIMA MALAK + ALSSAMOURE DESIGN ASSOCIATES (سما) 2003
This document including all drawing and text is the property and copyright of SIMA MALAK + ALSSAMOURE DESIGN ASSOCIATES for use solely with respect to this Project and shall not be copied or reproduced by any means except by agreement in writing from SIMA MALAK + ALSSAMOURE DESIGN ASSOCIATES.

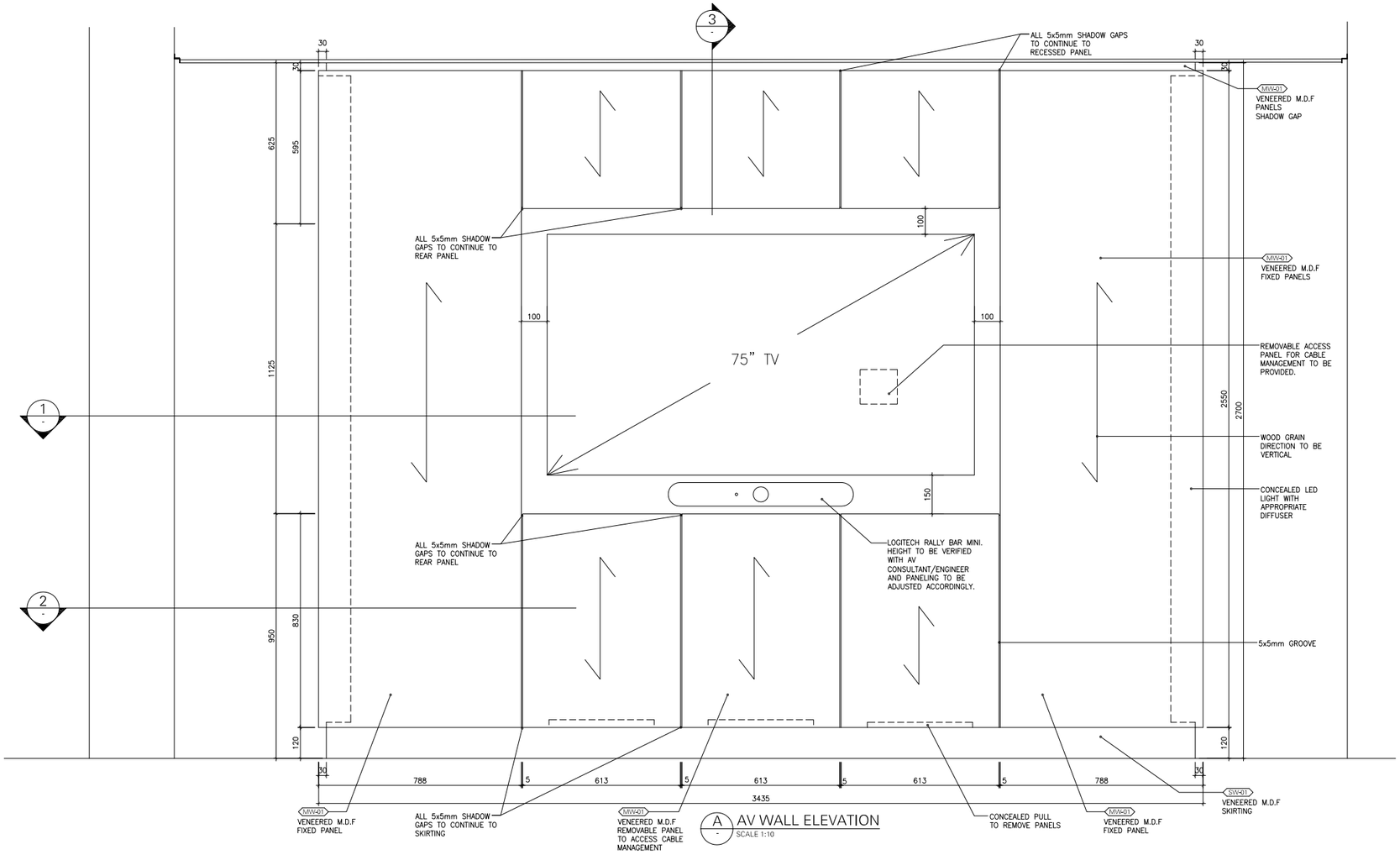

A AV WALL ELEVATION
SCALE 1:10

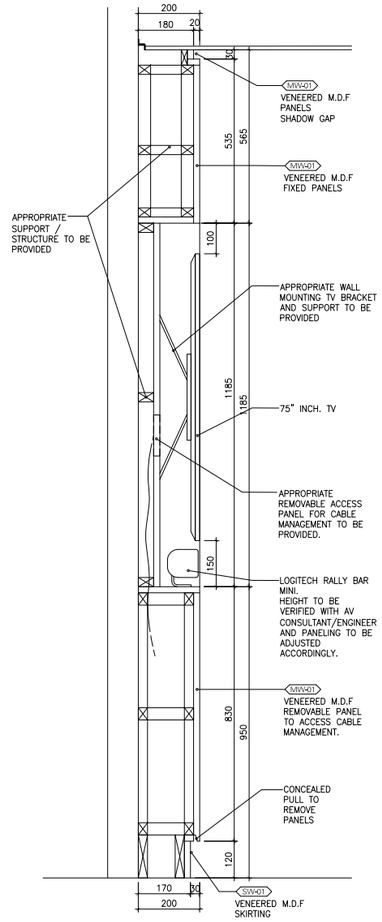

3 AV WALL SECTION
SCALE 1:10

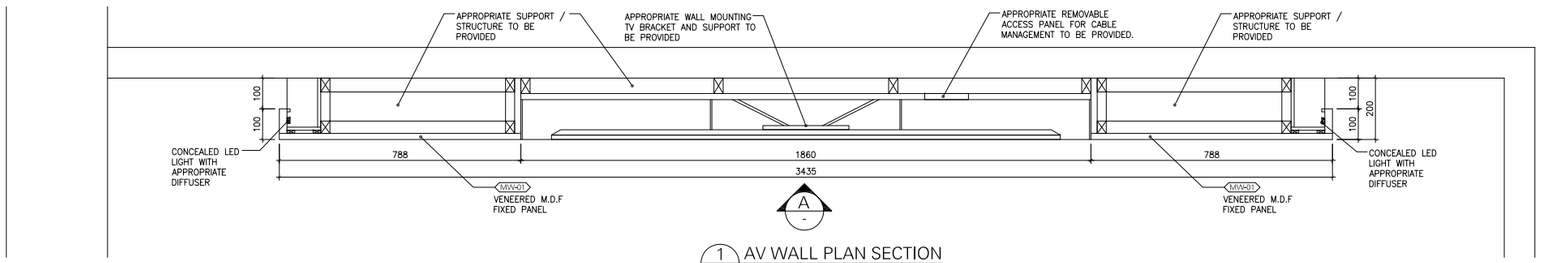

1 AV WALL PLAN SECTION
SCALE 1:10

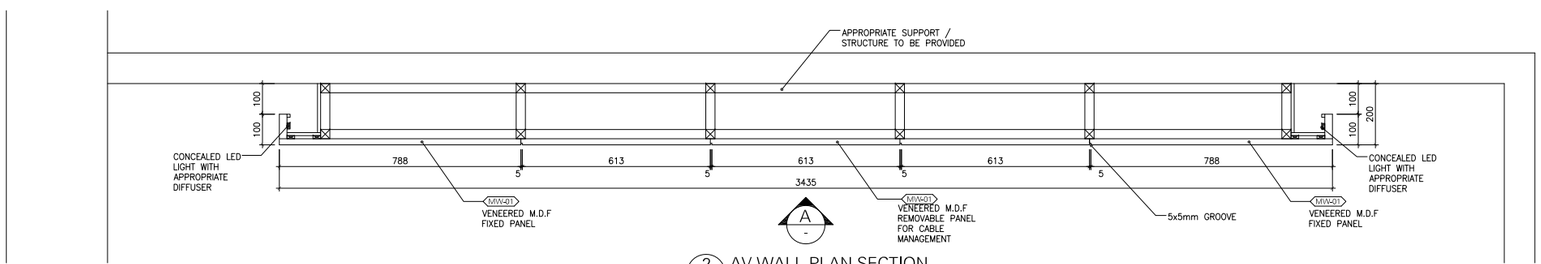

2 AV WALL PLAN SECTION
SCALE 1:10

GENERAL NOTES

1. This drawing shall be read in conjuction with all other relevant architectural,structural & electrical drawings including those of other consultants.
2. It is the responsability of contractors & manufacturers to check all relevant site dimensions prior to the start of construction or manufacture.
3. All materials and components must be installed on site in accordance with manufacturer's instructions , shop drawings and standard details.
4. All dimensions are in millemeters unless noted otherwise.
5. Full working drawings, specifications and samples are to be provided by Contractor/Supplier for approval prior to manufacture.

NOTES FOR MANUFACTURER:

* FULL REQUIREMENTS FOR AV EQUIPMENT TO BE CO-ORDINATED WITH AV CONSULTANT / ENGINEER.
* HEIGHT OF THE TV AND CAMERA TO BE VERIFIED WITH AV CONSULTANT AND PANELING TO BE ADJUSTED ACCORDINGLY.

NOTES :

* Construction methods shown on drawings are suggested methods only.
* All Fixing & Screws to be concealed. If not possible manufacturer to consult with designers before manufacture.
* All site dimension to be confirmed by contractor prior to the manufacture of items.

FINISHES

1. Full working drawings, specifications and samples are to be provided by Contractor/Supplier for approval prior to manufacture.
2. Please Refer to Finishing Schedule for full specifications:
ARC08-1-3 FIN

KEY PLAN

REV.#	GENERAL NOTES	DRAWN BY	CHECKED BY	APPROVED BY	DATE
	INITIAL ISSUE	MP	AM	SM	2022.08.09

PROJECT TITLE: ARC - ATLANTA
REFERENCE: ARC08 G

DRAWING TITLE: MEETING ROOM (1-010) AV WALL PLAN ELEVATION AND SECTIONS

DRAWING NUMBER: ID-304
REVISION: -

SCALE	FORMAT	ADDITIONAL NOTES	DESIGN DEVELOPMENT
1:10	A1		

SIMA MALAK + ALSSAMOURE
DESIGN ASSOCIATES
P.O. Box 15707 - Riyadh 11454 KSA
Tel. 01 441 4963 - Fax. 01 441 3867
simals@simals.com

©SIMA MALAK + ALSSAMOURE DESIGN ASSOCIATES (ـــــــ) 2003
This document including all drawing and text is the property and copyright of SIMA MALAK + ALSSAMOURE DESIGN ASSOCIATES for use solely with respect to this Project and shall not be copied or reproduced by any means except by agreement in writing from SIMA MALAK + ALSSAMOURE DESIGN ASSOCIATES.

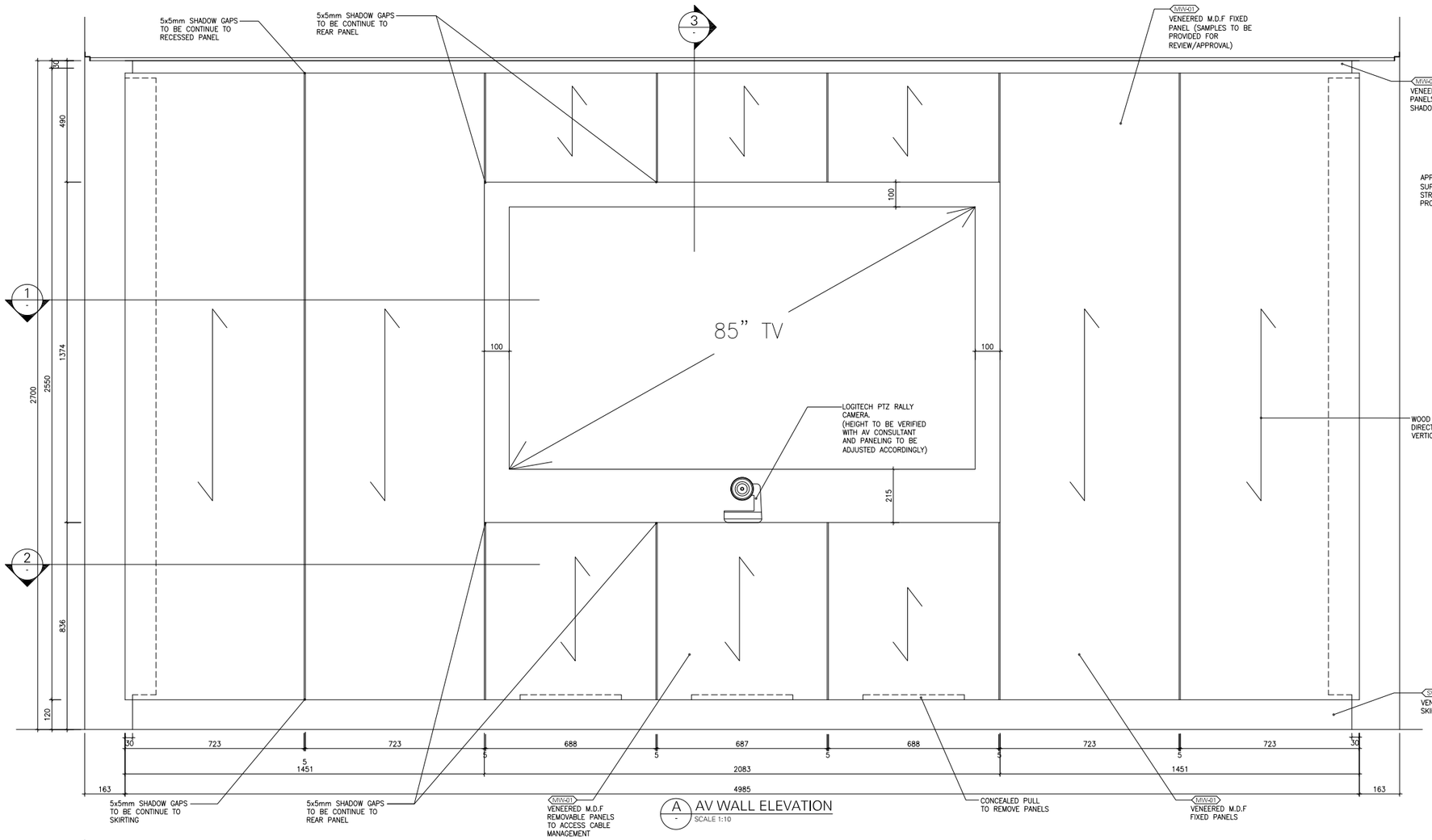

A AV WALL ELEVATION
SCALE 1:10

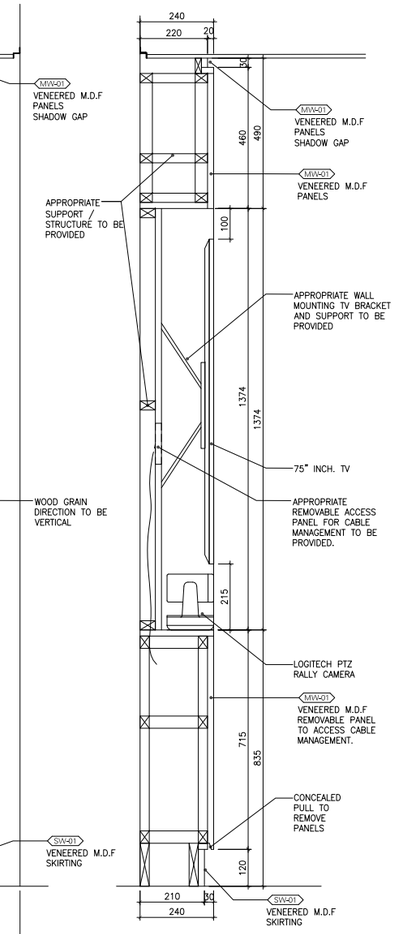

3 AV WALL SECTION
SCALE 1:10

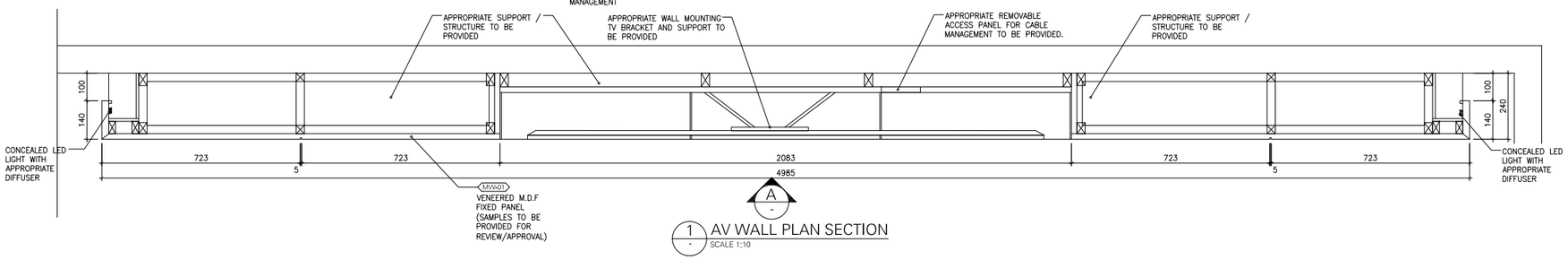

1 AV WALL PLAN SECTION
SCALE 1:10

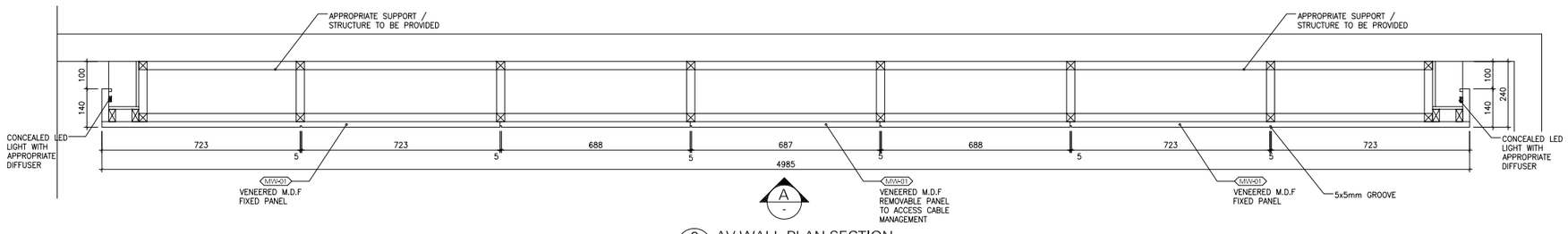

2 AV WALL PLAN SECTION
SCALE 1:10

GENERAL NOTES

1. This drawing shall be read in conjuction with all other relevant architectural,structural & electrical drawings including those of other consultants.
2. It is the responsability of contractors & manufacturers to check all relevant site dimensions prior to the start of construction or manufacture.
3. All materials and components must be installed on site in accordance with manufacturer's instructions , shop drawings and standard details.
4. All dimensions are in millemeters unless noted otherwise.
5. Full working drawings, specifications and samples are to be provided by Contractor/Supplier for approval prior to manufacture.

NOTES FOR MANUFACTURER:

* FULL REQUIREMENTS FOR AV EQUIPMENT TO BE CO-ORDINATED WITH AV CONSULTANT / ENGINEER.
* HEIGHT OF THE TV AND CAMERA TO BE VERIFIED WITH AV CONSULTANT AND PANELING TO BE ADJUSTED ACCORDINGLY.

NOTES :

* Construction methods shown on drawings are suggested methods only.
* All Fixing & Screws to be concealed. If not possible manufacturer to consult with designers before manufacture.
* All site dimension to be confirmed by contractor prior to the manufacture of items.

FINISHES

1. Full working drawings, specifications and samples are to be provided by Contractor/Supplier for approval prior to manufacture.
2. Please Refer to Finishing Schedule for full specifications:
ARC08-1-3 FIN

KEY PLAN

REV.#	GENERAL NOTES	DRAWN BY	CHECKED BY	APPROVED BY	DATE
	INITIAL ISSUE	MP	AM	SM	2022.08.09

PROJECT TITLE: ARC - ATLANTA
REFERENCE: ARC08 G

DRAWING TITLE: MEETING ROOM (1-002) AV WALL PLAN ELEVATION AND SECTIONS

DRAWING NUMBER: ID-305
REVISION: -

SCALE	FORMAT	ADDITIONAL NOTES	DESIGN DEVELOPMENT
1:10	A1		

SIMA MALAK + ALSSAMOURE DESIGN ASSOCIATES
P.O. Box 15707 - Riyadh 11454 KSA
Tel. 01 441 4963 - Fax. 01 441 3867
simals@simals.com

©SIMA MALAK + ALSSAMOURE DESIGN ASSOCIATES (سما) 2003
This document including all drawing and text is the property and copyright of SIMA MALAK + ALSSAMOURE DESIGN ASSOCIATES for use solely with respect to this Project and shall not be copied or reproduced by any means except by agreement in writing from SIMA MALAK + ALSSAMOURE DESIGN ASSOCIATES.

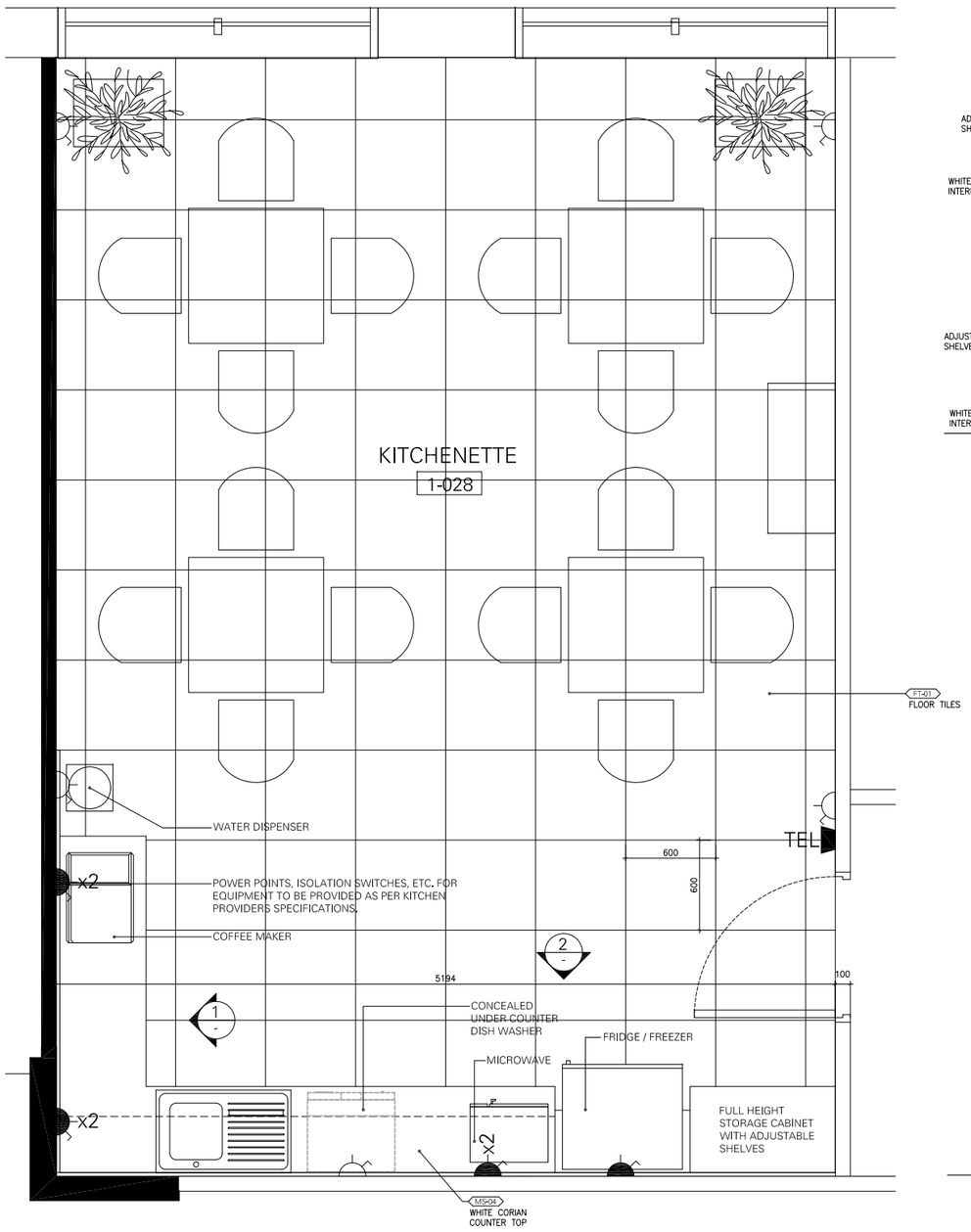

PLAN (KITCHENETTE 1-028)

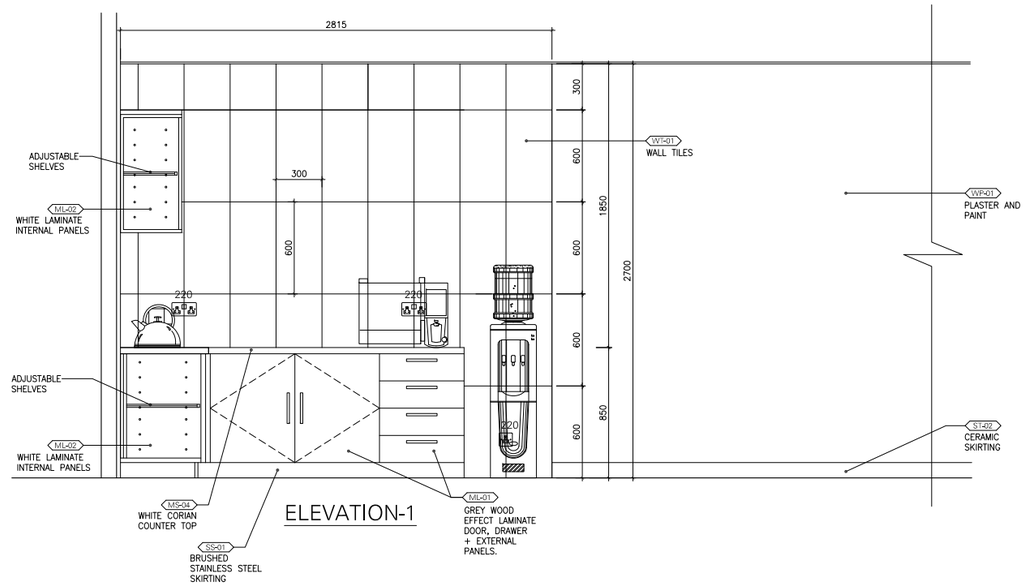

ELEVATION-1

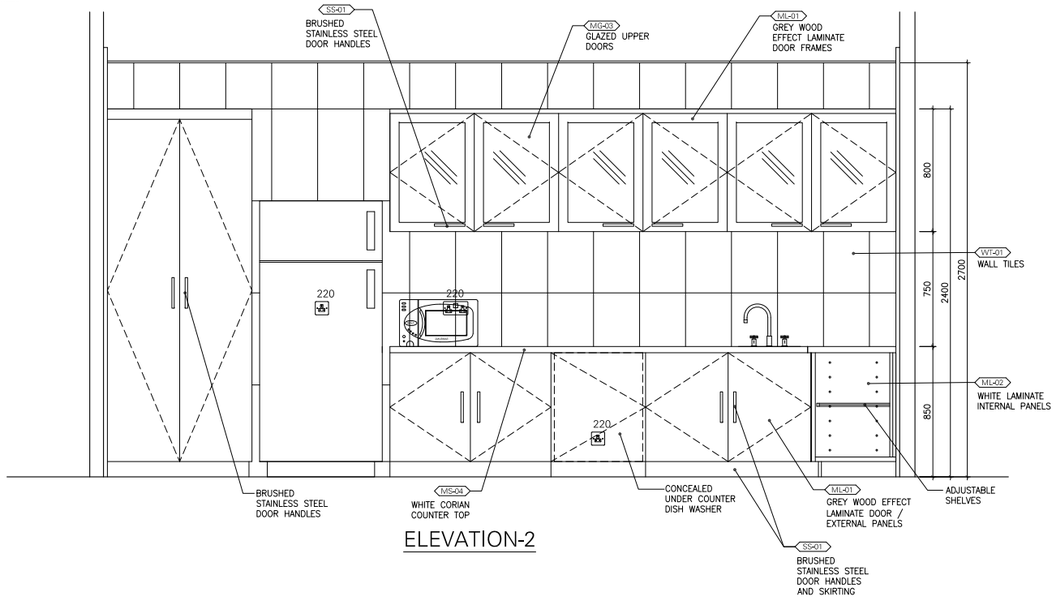

ELEVATION-2

GENERAL NOTES

1. This drawing shall be read in conjuction with all other relevant architectural,structural & electrical drawings including those of other consultants.
2. It is the responsability of contractors & manufacturers to check all relevant site dimensions prior to the start of construction or manufacture.
3. All materials and components must be installed on site in accordance with manufacturer's instructions , shop drawings and standard details.
4. All dimensions are in millemeters unless noted otherwise.
5. Full working drawings, specifications and samples are to be provided by Contractor/Supplier for approval prior to manufacture.

NOTES FOR MANUFACTURER:

1. Full working drawings, specifications and samples are to be provided by Contractor/Supplier for approval prior to manufacture.

TYPICAL SOCKET POSITIONS:

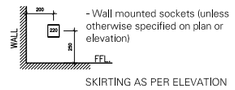

- Wall mounted sockets (unless otherwise specified on plan or elevation)

SKIRTING AS PER ELEVATION

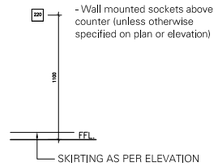

- Wall mounted sockets above counter (unless otherwise specified on plan or elevation)

KEY PLAN

REV.#	GENERAL NOTES	DRAWN BY	CHECKED BY	APPROVED BY	DATE
	INITIAL ISSUE	AC	AM	SM	2022.08.08

PROJECT TITLE	REFERENCE
ARCAPITA - ATLANTA	ARC08 G

DRAWING TITLE

KITCHENETTE (1-028) PLAN AND ELEVATIONS

DRAWING NUMBER	REVISION
ID-306	

SCALE	FORMAT	ADDITIONAL NOTES	DESIGN DEVELOPMENT
1:20	A1		

SIMA MALAK + ALSSAMOURE
DESIGN ASSOCIATES
P.O. Box 15707 - Riyadh 11454 KSA
Tel. 01 441 4963 - Fax. 01 441 3867
simals@simals.com

©SIMA MALAK + ALSSAMOURE DESIGN ASSOCIATES (ـــــــ) 2003
This document including all drawing and text is the property and copyright of SIMA MALAK + ALSSAMOURE DESIGN ASSOCIATES for use solely with respect to this Project and shall not be copied or reproduced by any means except by agreement in writing from SIMA MALAK + ALSSAMOURE DESIGN ASSOCIATES.

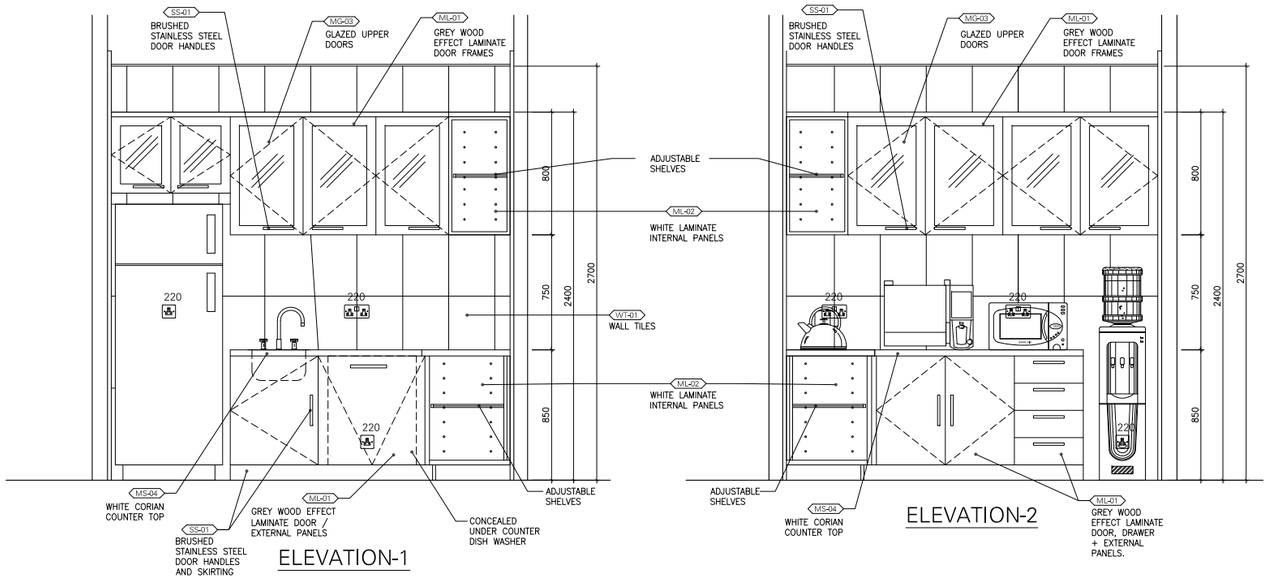

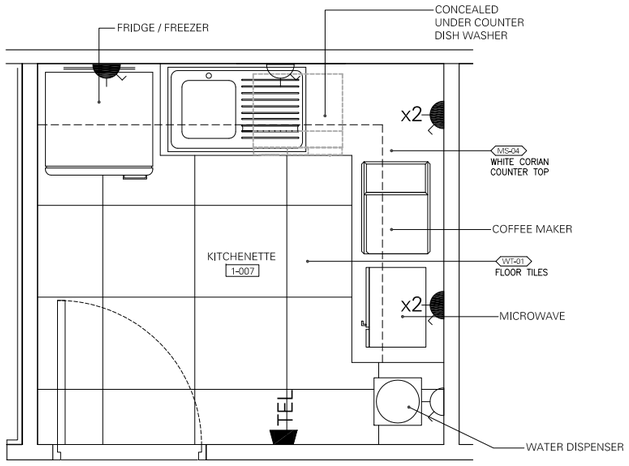

KITCHENETTE PLAN

GENERAL NOTES

1. This drawing shall be read in conjuction with all other relevant architectural,structural & electrical drawings including those of other consultants.
2. It is the responsability of contractors & manufacturers to check all relevant site dimensions prior to the start of construction or manufacture.
3. All materials and components must be installed on site in accordance with manufacturer's instructions , shop drawings and standard details.
4. All dimensions are in millemeters unless noted otherwise.
5. Full working drawings, specifications and samples are to be provided by Contractor/Supplier for approval prior to manufacture.

NOTES FOR MANUFACTURER:

1. Full working drawings, specifications and samples are to be provided by Contractor/Supplier for approval prior to manufacture.

TYPICAL SOCKET POSITIONS:

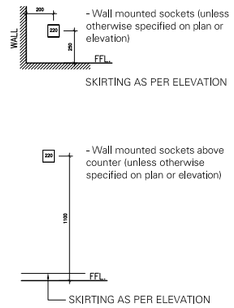

KEY PLAN

REV.#		DRAWN BY	CHECKED BY	APPROVED BY	DATE
	INITIAL ISSUE	AC	AM	SM	2022.07.17
	GENERAL NOTES				

PROJECT TITLE	REFERENCE
ARCAPITA - ATLANTA	ARC08 G

DRAWING TITLE

KITCHENETTE (1-007) PLAN AND ELEVATIONS

DRAWING NUMBER	REVISION
SK-06	

SCALE	FORMAT	ADDITIONAL NOTES	DESIGN DEVELOPMENT
1:20	A1		

SIMA MALAK + ALSSAMOURE
DESIGN ASSOCIATES
P.O. Box 15707 - Riyadh 11454 KSA
Tel. 01 441 4963 - Fax. 01 441 3867
simals@simals.com

©SIMA MALAK + ALSSAMOURE DESIGN ASSOCIATES (سما) 2003
This document including all drawing and text is the property and copyright of SIMA MALAK + ALSSAMOURE DESIGN ASSOCIATES for use solely with respect to this Project and shall not be copied or reproduced by any means except by agreement in writing from SIMA MALAK + ALSSAMOURE DESIGN ASSOCIATES.

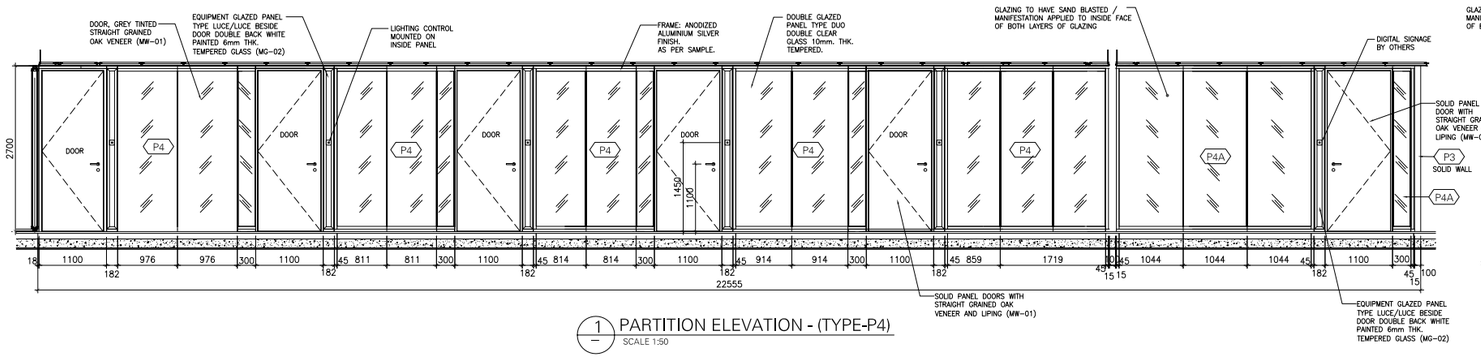

1 PARTITION ELEVATION - (TYPE-P4)
SCALE 1:50

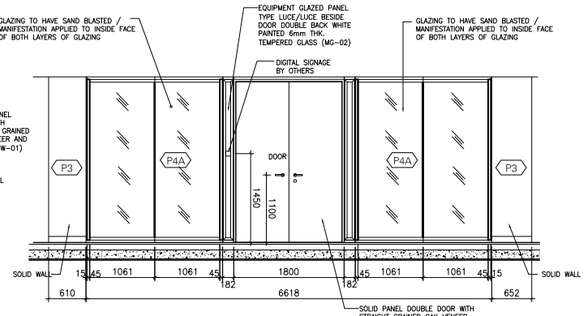

7 PARTITION ELEVATION - (TYPE-P4A)
SCALE 1:50

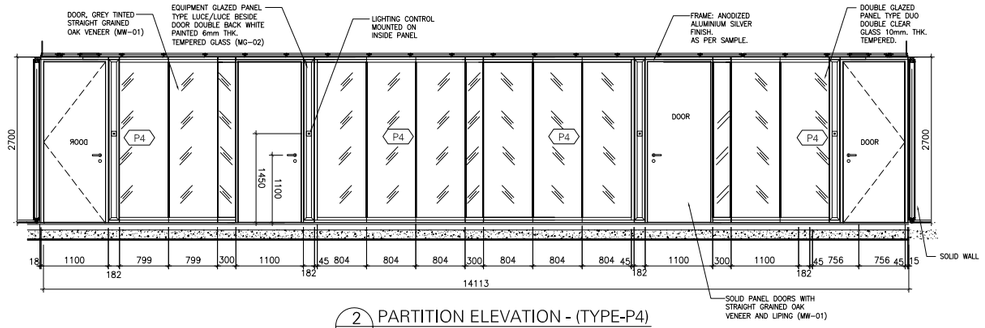

2 PARTITION ELEVATION - (TYPE-P4)
SCALE 1:50

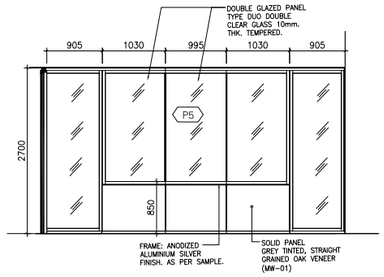

05 TYPICAL ELEVATION (TYPE-P5)
SC.1:50

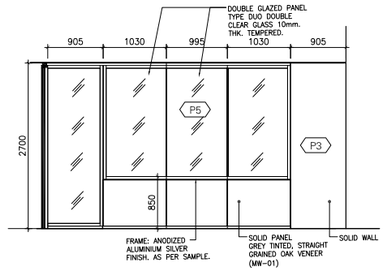

06 TYPICAL ELEVATION (TYPE-P5)
SC.1:50

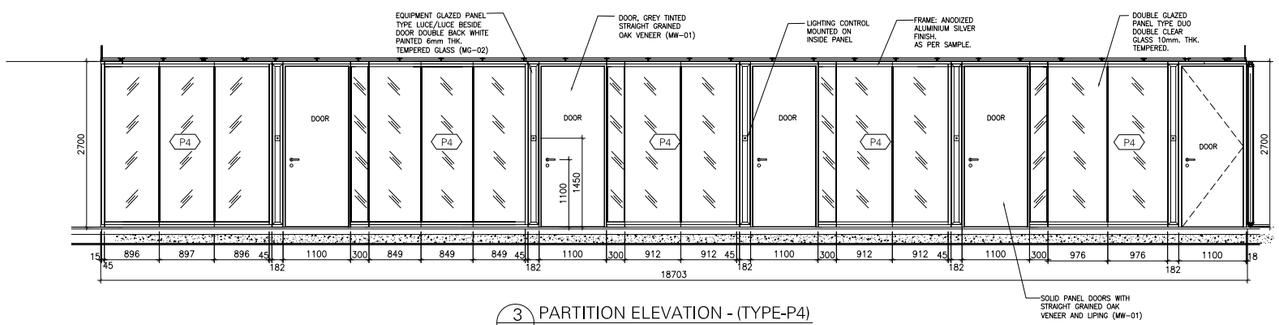

3 PARTITION ELEVATION - (TYPE-P4)
SCALE 1:50

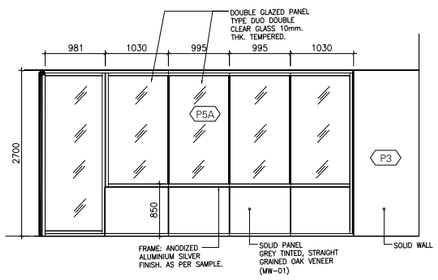

04 TYPICAL ELEVATION (TYPE-P5A)
SC.1:50

GENERAL NOTES

1. This drawing shall be read in conjuction with all other relevant architectural,structural & electrical drawings including those of other consultants.
2. It is the responsability of contractors & manufacturers to check all relevant site dimensions prior to the start of construction or manufacture.
3. All materials and components must be installed on site in accordance with manufacturer's instructions , shop drawings and standard details.
4. All dimensions are in millemeters unless noted otherwise.
5. Full working drawings, specifications and samples are to be provided by Contractor/Supplier for approval prior to manufacture.

PARTITION TYPE:

P1 - 100mm thick Blockwork.

P3 - Metal stud gypsum wall.

P4 - FULLY GLAZED PARTITION SYSTEM: Double glazed office partition wall system with Aluminum profiles. Fully glazed module. Frame in anodized aluminum silver finish as per approved sample. Equipment panel with back painted glass (MG-02).

P4A - DUO DOUBLE FULLY GLAZED PARTITION SYSTEM: Double glazed office partition wall system with Aluminium profiles. Fully glazed module.Frame in anodized aluminium silver finish as per approved sample, Equipment panel with back painted glass (MG-02) glazing to have sandblasting /manifestation applied with clear horizontal staggered banding as per detail.

P5 - PARTIALLY GLAZED PARTITION SYSTEM: Double glazed office partition wall system with Aluminum profiles. Partially glazed module consisting of double glazed upper panels and wood veneered lower panels (MW-01) with insulation. frame in anodized aluminum silver finish as per approved sample.

P5A - PARTIALLY GLAZED PARTITION SYSTEM: Double glazed office partition wall system with Aluminum profiles. Partially glazed module consisting of double glazed upper panels and wood veneered lower panels (MW-01) with insulation. frame in anodized aluminum silver finish as per approved sample.

P8 - Metal stud Gypsum partition with fitted A/V wall consisting of wood paneling / Cabinetry.

NOTES:

*. All doors are to be solid plain leaf with wood veneered.

*. Partition supplier to conduct their own site survey to obtain asbuilt dimensions and submit plans, elevations and details for approval.

KEY PLAN

REV.#		DRAWN BY	CHECKED BY	APPROVED BY	DATE
A	GEN. REV.	MP	AM	SM	2022.10.27
	INITIAL ISSUE	AC/MP	AM	SM	2022.08.17

PROJECT TITLE	REFERENCE
ARC - ATLANTA	ARC08 G

DRAWING TITLE: PARTITION ELEVATIONS

DRAWING NUMBER	REVISION
ID-308	A

SCALE	FORMAT	ADDITIONAL NOTES	DESIGN DEVELOPMENT
1:50	A1		

SIMA MALAK + ALSSAMOURE
DESIGN ASSOCIATES
P.O. Box 15707 - Riyadh 11454 KSA
Tel. 01 441 4963 - Fax. 01 441 3867
simals@simals.com

©SIMA MALAK + ALSSAMOURE DESIGN ASSOCIATES (ـــــ) 2003
This document including all drawing and text is the property and copyright of SIMA MALAK + ALSSAMOURE DESIGN ASSOCIATES for use solely with respect to this Project and shall not be copied or reproduced by any means except by agreement in writing from SIMA MALAK + ALSSAMOURE DESIGN ASSOCIATES.

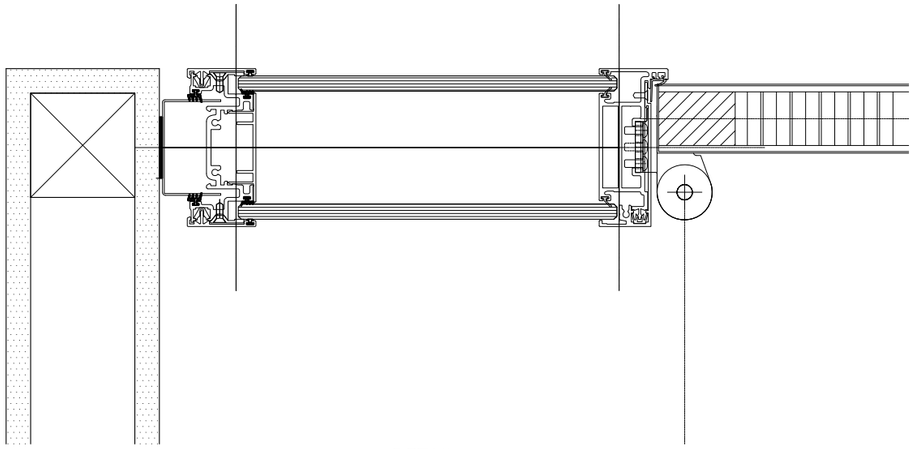

DETAIL-01
SCALE 1:2

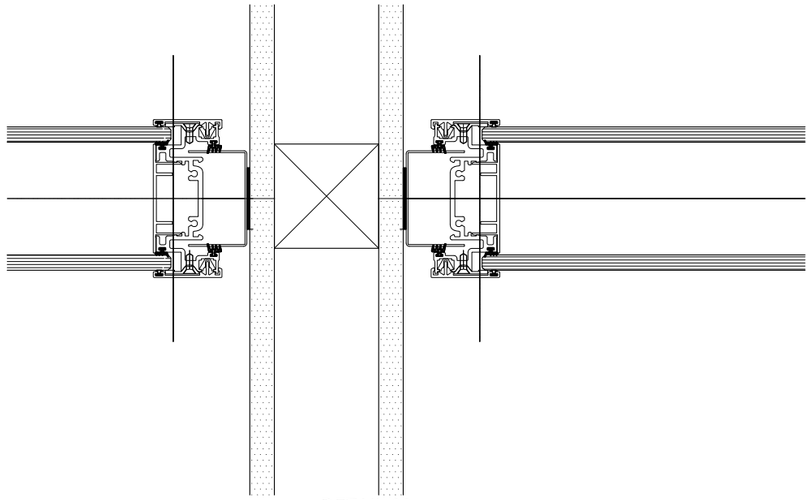

DETAIL-02
SCALE 1:2

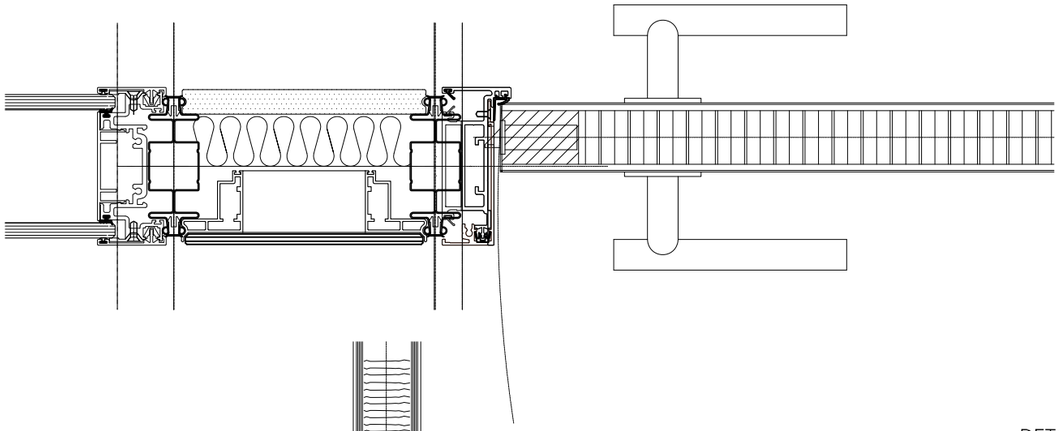

DETAIL-03
SCALE 1:2

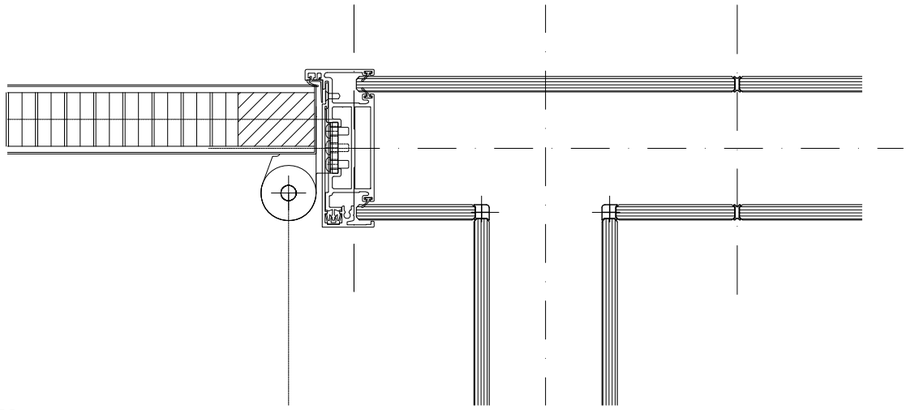

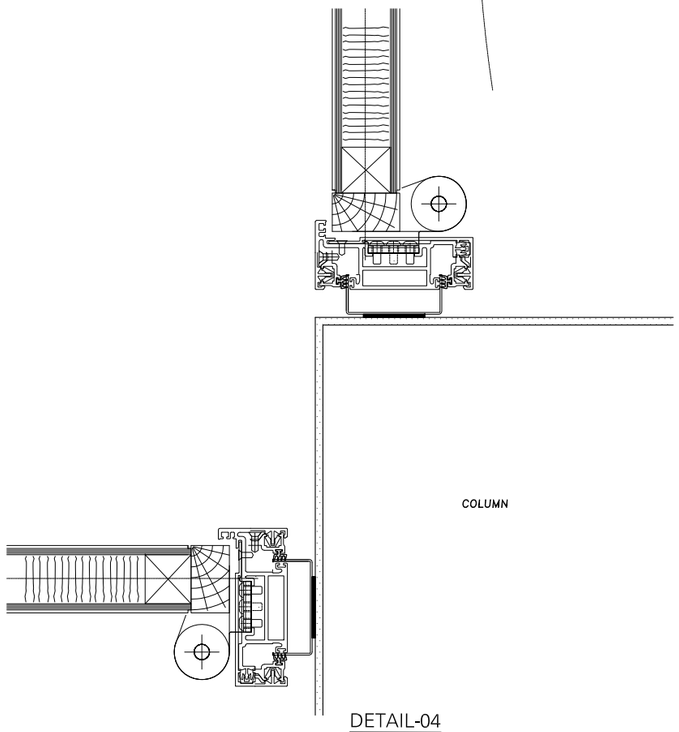

DETAIL-04
SCALE 1:2

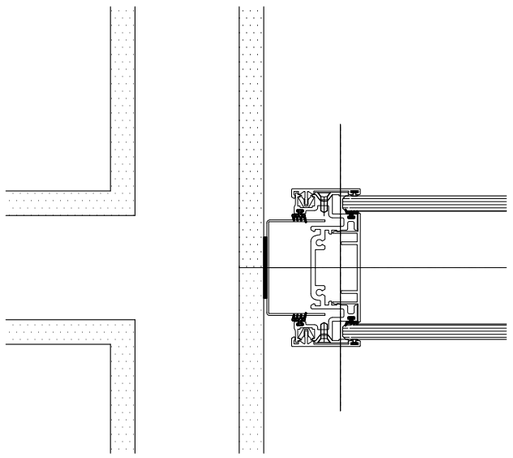

DETAIL-05
SCALE 1:2

DOOR MODULE – VERTICAL SECTION

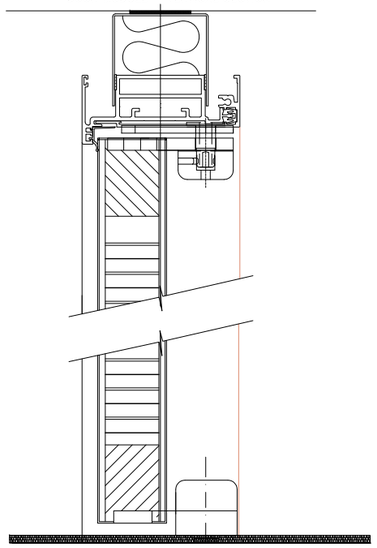

DETAIL-06
SCALE 1:2

CORRIDOR VERTICAL SECTION

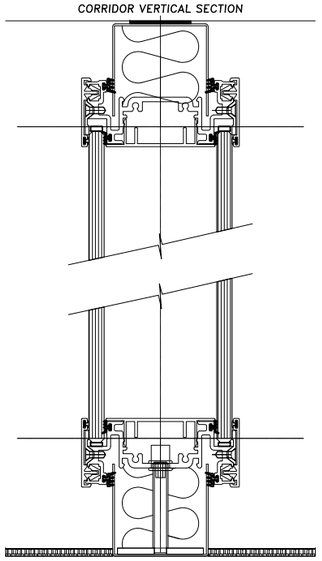

DETAIL-07
SCALE 1:2

GENERAL NOTES

1. This drawing shall be read in conjuction with all other relevant architectural,structural & electrical drawings including those of other consultants.
2. It is the responsability of contractors & manufacturers to check all relevant site dimensions prior to the start of construction or manufacture.
3. All materials and components must be installed on site in accordance with manufacturer's instructions , shop drawings and standard details.
4. All dimensions are in millemeters unless noted otherwise.
5. Full working drawings, specifications and samples are to be provided by Contractor/Supplier for approval prior to manufacture.

PARTITION TYPE:

P1 - 100mm thick Blockwork.

P3 - Metal stud gypsum wall.

P4 - FULLY GLAZED PARTITION SYSTEM: Double glazed office partition wall system with Aluminum profiles. Fully glazed module. Frame in anodized aluminum silver finish as per approved sample. Equipment panel with back painted glass (MG-02).

P4A - DUO DOUBLE FULLY GLAZED PARTITION SYSTEM: Double glazed office partition wall system with Aluminium profiles. Fully glazed module.Frame in anodized aluminium silver finish as per approved sample. Equipment panel with back painted glass (MG-02) glazing to have sandblasting /manifestation applied with clear horizontal staggered banding as per detail.

P5 - PARTIALLY GLAZED PARTITION SYSTEM: Double glazed office partition wall system with Aluminum profiles. Partially glazed module consisting of double glazed upper panels and wood veneered lower panels (MW-01) with insulation. frame in anodized aluminum silver finish as per approved sample.

P5A - PARTIALLY GLAZED PARTITION SYSTEM: Double glazed office partition wall system with Aluminum profiles. Partially glazed module consisting of double glazed upper panels and wood veneered lower panels (MW-01) with insulation. frame in anodized aluminum silver finish as per approved sample.

P8 - Metal stud Gypsum partition with fitted A/V wall consisting of wood paneling / Cabinetry.

NOTES:

*. All doors are to be solid plain leaf with wood veneered.

*. Partition supplier to conduct their own site survey to obtain asbuilt dimensions and submit plans, elevations and details for approval.

KEY PLAN

REV.#	GENERAL NOTES	DRAWN BY	CHECKED BY	APPROVED BY	DATE
A	GEN. REV.	MP	AM	SM	2022.10.27
	INITIAL ISSUE	MP	AM	SM	2022.08.17

PROJECT TITLE	REFERENCE
ARC - ATLANTA	ARC08 G

DRAWING TITLE

PARTITION DETAILS

DRAWING NUMBER	REVISION
ID-308-2	A

SCALE	FORMAT	ADDITIONAL NOTES	DESIGN DEVELOPMENT
1:2	A1		

SIMA MALAK + ALSSAMOURE
DESIGN ASSOCIATES
P.O. Box 15707 - Riyadh 11454 KSA
Tel. 01 441 4963 - Fax. 01 441 3867
simals@simals.com

©SIMA MALAK + ALSSAMOURE DESIGN ASSOCIATES (سما) 2003
This document including all drawing and text is the property and copyright of SIMA MALAK + ALSSAMOURE DESIGN ASSOCIATES for use solely with respect to this Project and shall not be copied or reproduced by any means except by agreement in writing from SIMA MALAK + ALSSAMOURE DESIGN ASSOCIATES.

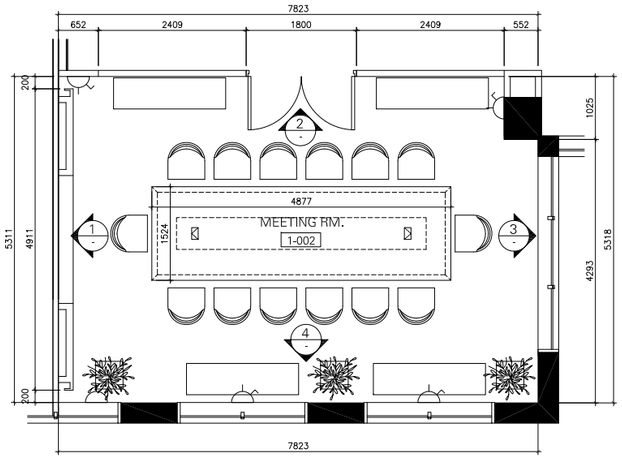

- MEETING ROOM (1-002) PLAN
SCALE 1:50

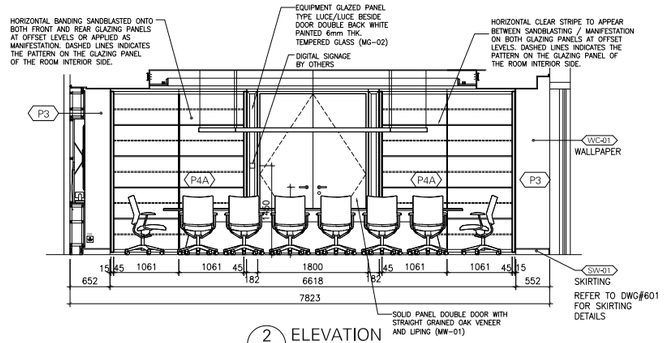

2 ELEVATION
SCALE 1:50

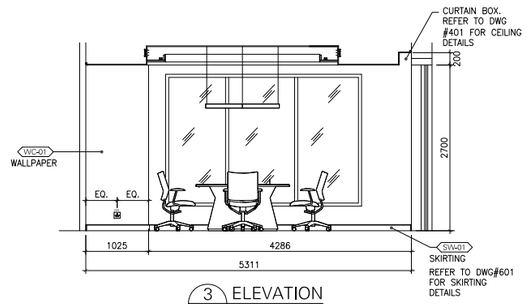

3 ELEVATION
SCALE 1:50

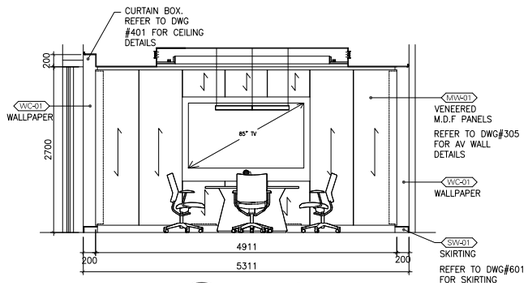

1 ELEVATION
SCALE 1:50

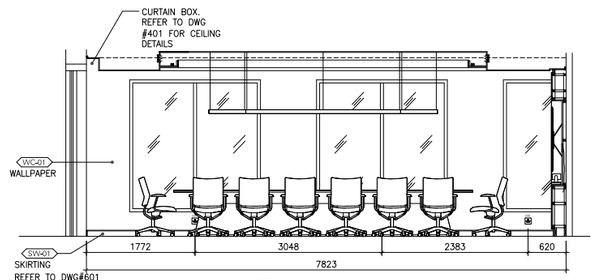

4 ELEVATION
SCALE 1:50

GENERAL NOTES

1. This drawing shall be read in conjuction with all other relevant architectural,structural & electrical drawings including those of other consultants.
2. It is the responsability of contractors & manufacturers to check all relevant site dimensions prior to the start of construction or manufacture.
3. All materials and components must be installed on site in accordance with manufacturer's instructions , shop drawings and standard details.
4. All dimensions are in millemeters unless noted otherwise.
5. Full working drawings, specifications and samples are to be provided by Contractor/Supplier for approval prior to manufacture.

FINISHES

* Please Refer to Finishing Schedule for full specifications:
ARC08-1-3 FIN

KEY PLAN

REV.#	GENERAL NOTES	DRAWN BY	CHECKED BY	APPROVED BY	DATE
	INITIAL ISSUE	MP	AM	SM	2022.08.22

PROJECT TITLE	REFERENCE
ARC - ATLANTA	ARC08 G

DRAWING TITLE
MEETING ROOM (1-002)
PLAN AND ELEVATIONS

DRAWING NUMBER	REVISION
ID-309	-

SCALE	FORMAT	ADDITIONAL NOTES	DESIGN DEVELOPMENT
1:50	A1		

SIMA MALAK + ALSSAMOURE
DESIGN ASSOCIATES
P.O. Box 15707 - Riyadh 11454 KSA
Tel. 01 441 4963 - Fax. 01 441 3867
simals@simals.com

©SIMA MALAK + ALSSAMOURE DESIGN ASSOCIATES (ـــمـــ) 2003
This document including all drawing and text is the property and copyright of SIMA MALAK + ALSSAMOURE DESIGN ASSOCIATES for use solely with respect to this Project and shall not be copied or reproduced by any means except by agreement in writing from SIMA MALAK + ALSSAMOURE DESIGN ASSOCIATES.

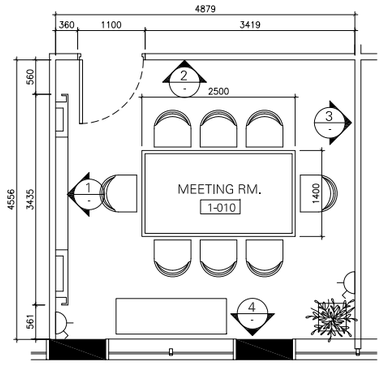

- MEETING ROOM (1-010) PLAN
SCALE 1:50

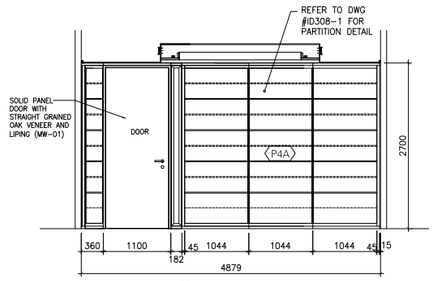

2 ELEVATION
SCALE 1:50

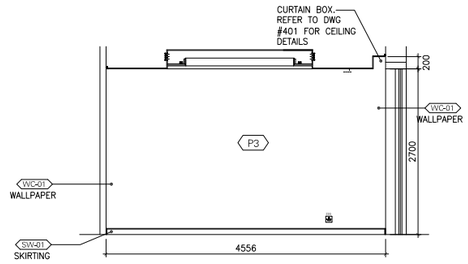

3 ELEVATION
SCALE 1:50

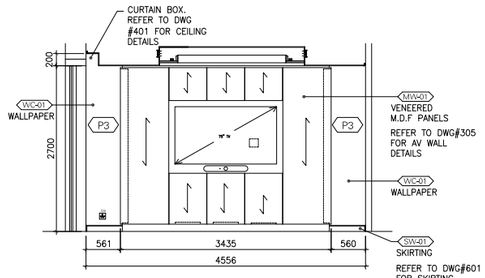

1 ELEVATION
SCALE 1:50

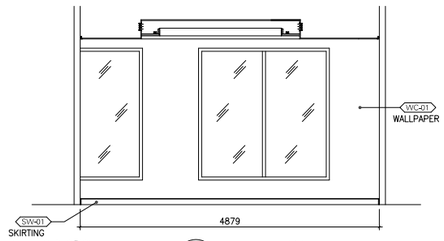

4 ELEVATION
SCALE 1:50

GENERAL NOTES

1. This drawing shall be read in conjuction with all other relevant architectural,structural & electrical drawings including those of other consultants.
2. It is the responsability of contractors & manufacturers to check all relevant site dimensions prior to the start of construction or manufacture.
3. All materials and components must be installed on site in accordance with manufacturer's instructions , shop drawings and standard details.
4. All dimensions are in millemeters unless noted otherwise.
5. Full working drawings, specifications and samples are to be provided by Contractor/Supplier for approval prior to manufacture.

FINISHES

* Please Refer to Finishing Schedule for full specifications:
ARC08-1-3 FIN

KEY PLAN

REV.#	GENERAL NOTES	DRAWN BY	CHECKED BY	APPROVED BY	DATE
	INITIAL ISSUE	MP	AM	SM	2022.08.22

PROJECT TITLE	REFERENCE
ARC - ATLANTA	ARC08 G

DRAWING TITLE
MEETING ROOM (1-010)
PLAN AND ELEVATIONS

DRAWING NUMBER	REVISION
ID-310	-

SCALE	FORMAT	ADDITIONAL NOTES	DESIGN DEVELOPMENT
1:50	A1		

SIMA MALAK + ALSSAMOURE
DESIGN ASSOCIATES
P.O. Box 15707 - Riyadh 11454 KSA
Tel. 01 441 4963 - Fax. 01 441 3867
simals@simals.com

©SIMA MALAK + ALSSAMOURE DESIGN ASSOCIATES (ـــــــ) 2003
This document including all drawing and text is the property and copyright of SIMA MALAK + ALSSAMOURE DESIGN ASSOCIATES for use solely with respect to this Project and shall not be copied or reproduced by any means except by agreement in writing from SIMA MALAK + ALSSAMOURE DESIGN ASSOCIATES.

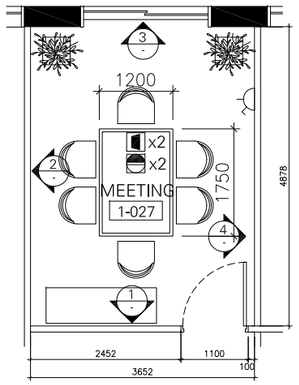

- MEETING ROOM (1-027) PLAN
SCALE 1:50

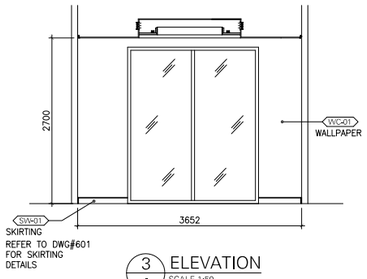

3 - ELEVATION
SCALE 1:50

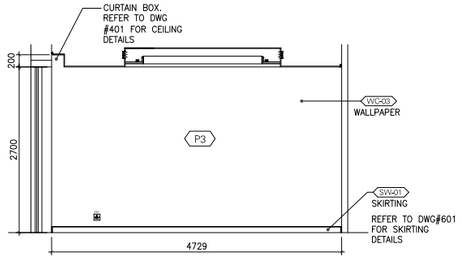

4 - ELEVATION
SCALE 1:50

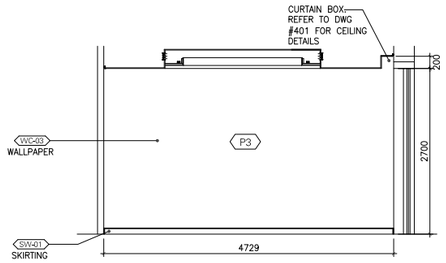

2 - ELEVATION
SCALE 1:50

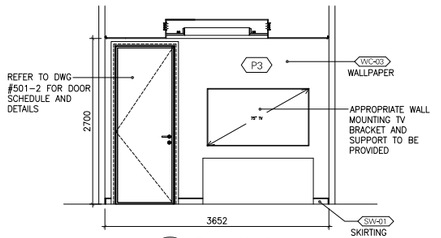

1 - ELEVATION
SCALE 1:50

GENERAL NOTES

1. This drawing shall be read in conjuction with all other relevant architectural,structural & electrical drawings including those of other consultants.
2. It is the responsability of contractors & manufacturers to check all relevant site dimensions prior to the start of construction or manufacture.
3. All materials and components must be installed on site in accordance with manufacturer's instructions , shop drawings and standard details.
4. All dimensions are in millemeters unless noted otherwise.
5. Full working drawings, specifications and samples are to be provided by Contractor/Supplier for approval prior to manufacture.

FINISHES

* Please Refer to Finishing Schedule for full specifications:
ARC08-1-3 FIN

KEY PLAN

REV.#	GENERAL NOTES	DRAWN BY	CHECKED BY	APPROVED BY	DATE
	INITIAL ISSUE	MP	AM	SM	2022.08.22

PROJECT TITLE	REFERENCE
ARC - ATLANTA	ARC08 G

DRAWING TITLE
MEETING ROOM (1-027)
PLAN AND ELEVATIONS

DRAWING NUMBER	REVISION
ID-311	-

SCALE	FORMAT	ADDITIONAL NOTES	DESIGN DEVELOPMENT
1:50	A1		

SIMA MALAK + ALSSAMOURE
DESIGN ASSOCIATES
P.O. Box 15707 - Riyadh 11454 KSA
Tel. 01 441 4963 - Fax. 01 441 3867
simals@simals.com

©SIMA MALAK + ALSSAMOURE DESIGN ASSOCIATES (سما) 2003
This document including all drawing and text is the property and copyright of SIMA MALAK + ALSSAMOURE DESIGN ASSOCIATES for use solely with respect to this Project and shall not be copied or reproduced by any means except by agreement in writing from SIMA MALAK + ALSSAMOURE DESIGN ASSOCIATES.

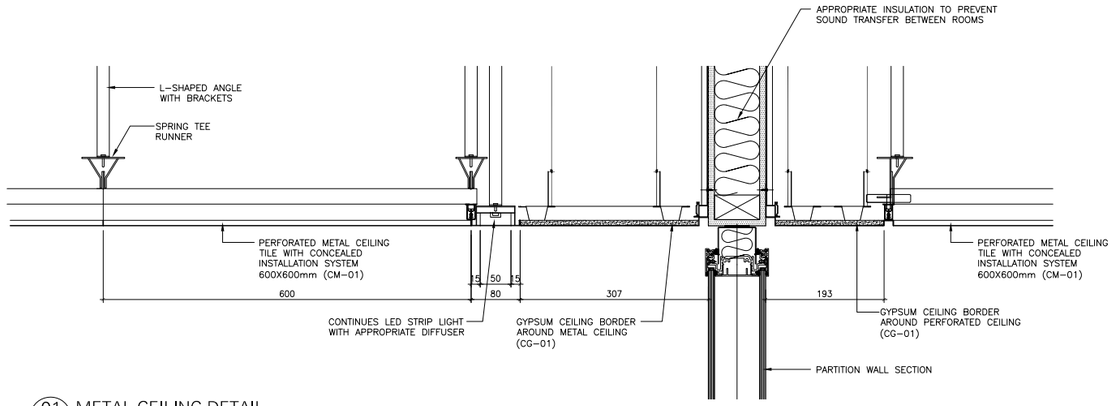

01 — METAL CEILING DETAIL
SC. 1:5

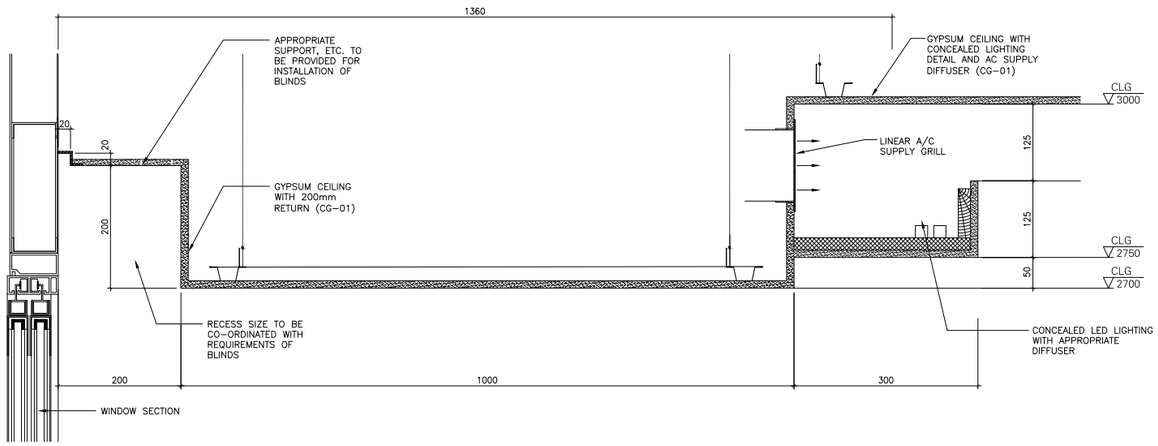

02 — TYPICAL GYPSUM CEILING DETAIL WITH CONCEALED LED LIGHT AND CURTAIN BOX @ MEETING ROOMS
SC. 1:5

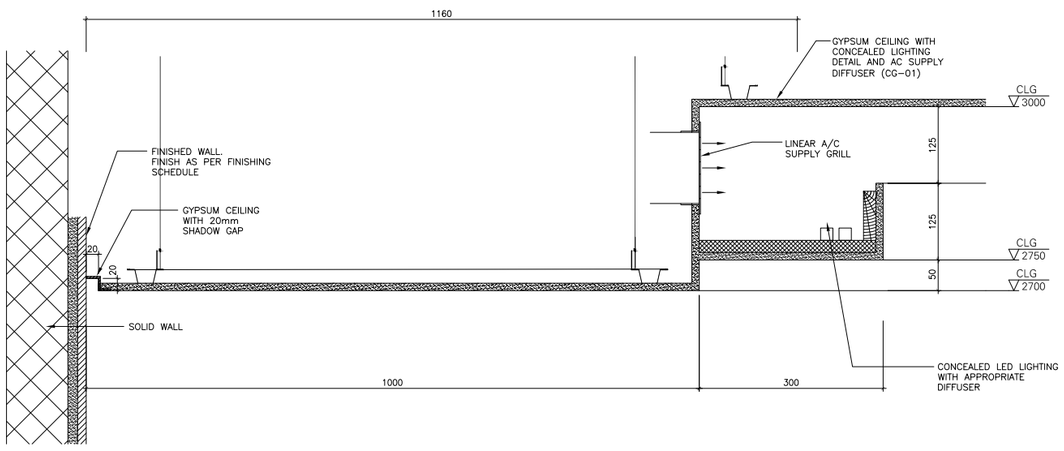

03 — TYPICAL GYPSUM CEILING DETAIL WITH CONCEALED LED LIGHT @ RECEPTION
SC. 1:5

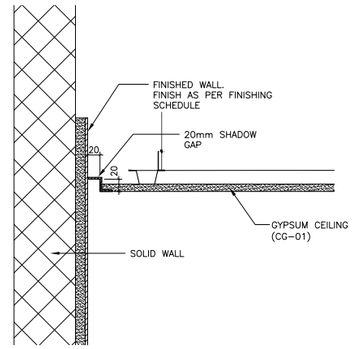

04 — TYPICAL GYPSUM FLAT CEILING DETAIL
SC. 1:5

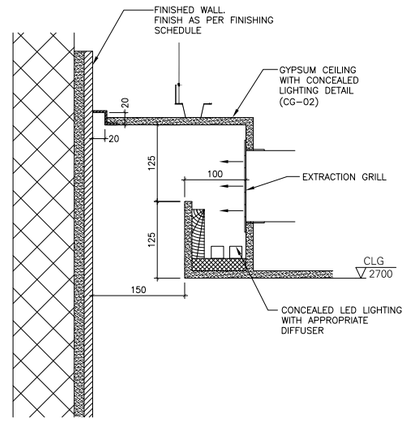

05 — CEILING DETAIL WITH CONCEALED LED LIGHTS @ RESTROOM
SC. 1:5

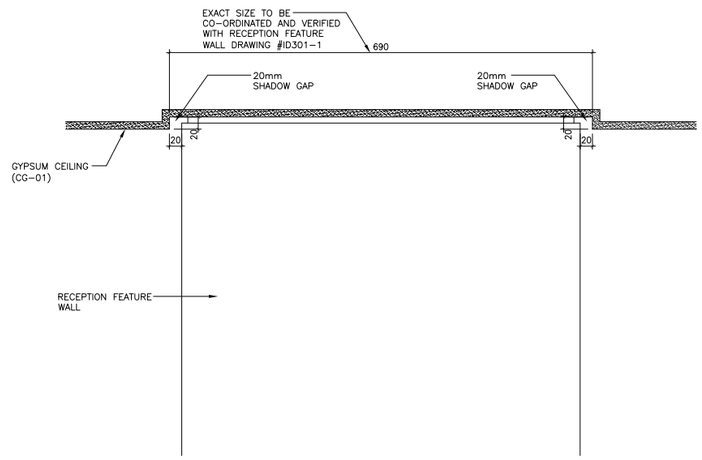

06 — DETAIL AT RECEPTION FEATURE WALL
SC. 1:5

GENERAL NOTES

1. This drawing shall be read in conjuction with all other relevant architectural,structural & electrical drawings including those of other consultants.
2. It is the responsability of contractors & manufacturers to check all relevant site dimensions prior to the start of construction or manufacture.
3. All materials and components must be installed on site in accordance with manufacturer's instructions , shop drawings and standard details.
4. All dimensions are in millemeters unless noted otherwise.
5. Full working drawings, specifications and samples are to be provided by Contractor/Supplier for approval prior to manufacture.

NOTES FOR MANUFACTURE:

* Construction methods shown on drawings are suggested methods only.
* Full working drawings and samples are to be provided by contractor for approval prior to manufacture.

*Please refer to relevant sub consultants drawings for Audio visual, security and I.T. requirements.

FINISHES

* All Elements of the ceiling including AC Grill and ceiling mounted devices should be Ral 9016.
* Samples of all finishes are to be provided by the contractor to be approved by the designer prior to manufacture / construction.

Full Shop drawings and details to be provided by Contractor / Manufacturer.

KEY PLAN

REV.#	GENERAL NOTES	DRAWN BY	CHECKED BY	APPROVED BY	DATE
	INITIAL ISSUE	MP	AM	SM	2022.08.17

PROJECT TITLE	REFERENCE
ARC - ATLANTA	ARC08 G

DRAWING TITLE: TYPICAL CEILING DETAILS

DRAWING NUMBER	REVISION
ID-401	-

SCALE	FORMAT	ADDITIONAL NOTES	DESIGN DEVELOPMENT
1:5	A1		

SIMA MALAK + ALSSAMOURE
DESIGN ASSOCIATES
P.O. Box 15707 - Riyadh 11454 KSA
Tel. 01 441 4963 - Fax. 01 441 3867
simals@simals.com

©SIMA MALAK + ALSSAMOURE DESIGN ASSOCIATES (سما) 2003
This document including all drawing and text is the property and copyright of SIMA MALAK + ALSSAMOURE DESIGN ASSOCIATES for use solely with respect to this Project and shall not be copied or reproduced by any means except by agreement in writing from SIMA MALAK + ALSSAMOURE DESIGN ASSOCIATES.

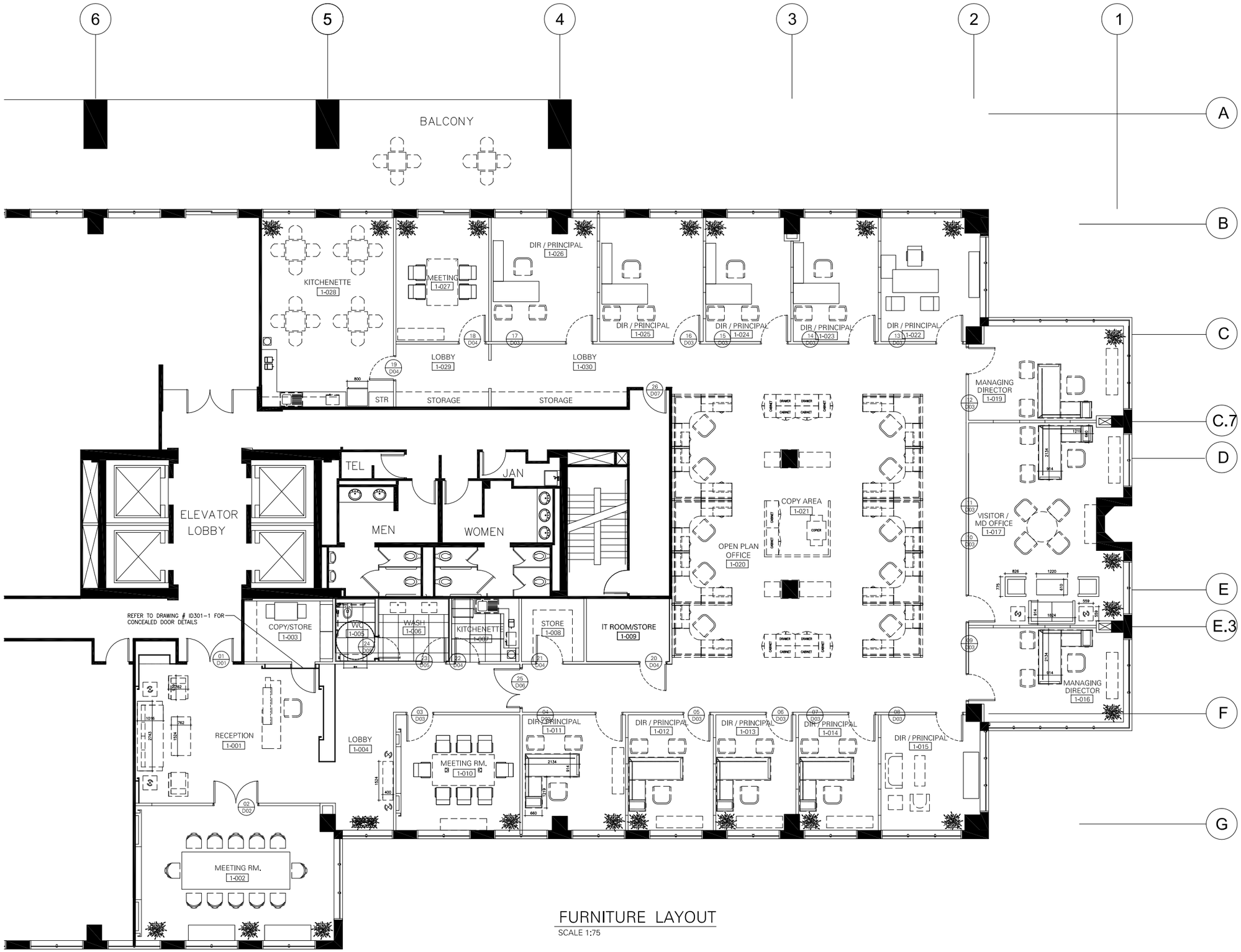

FURNITURE LAYOUT

SCALE 1:75

GENERAL NOTES

1. This drawing shall be read in conjuction with all other relevant architectural,structural & electrical drawings including those of other consultants.
2. It is the responsability of contractors & manufacturers to check all relevant site dimensions prior to the start of construction or manufacture.
3. All materials and components must be installed on site in accordance with manufacturer's instructions , shop drawings and standard details.
4. All dimensions are in millemeters unless noted otherwise.
5. Full working drawings, specifications and samples are to be provided by Contractor/Supplier for approval prior to manufacture.

KEY PLAN

REV.#	GENERAL NOTES	DRAWN BY	CHECKED BY	APPROVED BY	DATE
	INITIAL ISSUE	MP	AM	SM	2022.08.18

PROJECT TITLE: ARCAPITA - ATLANTA

REFERENCE: ARC08 G

DRAWING TITLE: DOORS KEY PLAN

DRAWING NUMBER: ID-501-1

REVISION: -

SCALE	FORMAT	ADDITIONAL NOTES	DESIGN DEVELOPMENT
1:75	A1		

SIMA MALAK + ALSSAMOURE
DESIGN ASSOCIATES
P.O. Box 15707 - Riyadh 11454 KSA
Tel. 01 441 4963 - Fax. 01 441 3867
simals@simals.com

©SIMA MALAK + ALSSAMOURE DESIGN ASSOCIATES (سما) 2003
This document including all drawing and text is the property and copyright of SIMA MALAK + ALSSAMOURE DESIGN ASSOCIATES for use solely with respect to this Project and shall not be copied or reproduced by any means except by agreement in writing from SIMA MALAK + ALSSAMOURE DESIGN ASSOCIATES.

D01

Qty. 01

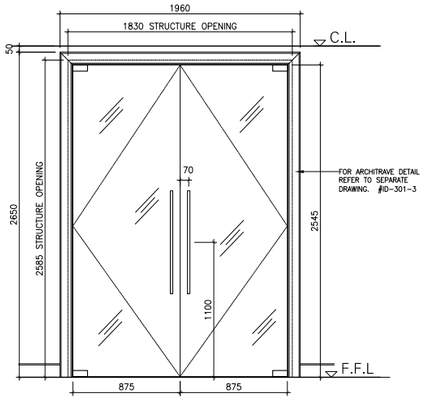

DOOR DESCRIPTION : 12mm THICK TOUGHENED CLEAR GLASS DOUBLE DOOR. WITH STAINLESS STEEL PATCH FITTINGS AND PULL HANDLES. GLASS SIZE: H875 x W2460mm EACH PANEL (EXACT DIMENSIONS TO BE CONFIRMED ON SITE.)
CLEAR PLASTIC SEAL TO BE PROVIDED ALL ROUND.

REQUIREMENTS FOR ACCESS CONTROL AND OTHER HARDWARE TO BE CO-ORDINATED WITH SECURITY/IT CONSULTANT.

DOOR HARDWARE: REFER TO SEPARATE SCHEDULE – ARC08-1-3 DH01

D02

Qty. 01

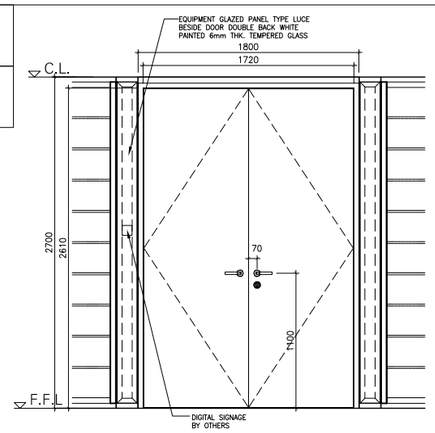

OFFICE PARTITION SYSTEM FLAT LEAF DOUBLE DOOR WITH EQUIPMENT PANEL ON ONE SIDE. DOOR PANELS WITH REAL STRAIGHT GRAINED OAK WOOD VENEER WITH TINTED SATIN FINISH. FRAME AS PER SELECTED PARTITION SYSTEM SUPPLIER TO PROVIDE FULL DETAILS

REQUIREMENTS FOR DIGITAL SIGNAGE TO BE CO-ORDINATED WITH IT/AV CONSULTANT.

DOOR HARDWARE: REFER TO SEPARATE SCHEDULE – ARC08-1-3 DH01

D03

Qty. 15

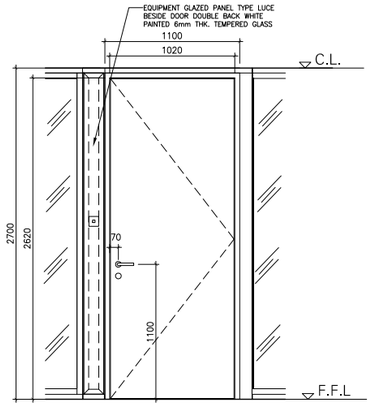

OFFICE PARTITION SYSTEM FLAT LEAF SINGLE DOOR WITH EQUIPMENT PANEL ON ONE SIDE. DOOR PANEL WITH REAL STRAIGHT GRAINED OAK WOOD VENEER WITH TINTED SATIN FINISH. FRAME AS PER SELECTED PARTITION SYSTEM SUPPLIER TO PROVIDE FULL DETAILS

REQUIREMENTS FOR DIGITAL SIGNAGE TO BE CO-ORDINATED WITH IT/AV CONSULTANT.

DOOR HARDWARE: REFER TO SEPARATE SCHEDULE – ARC08-1-3 DH01

D04

Qty. 05

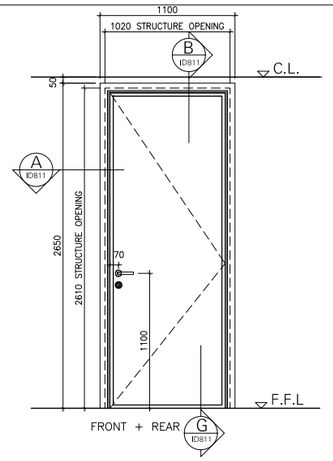

DOOR DESCRIPTION : FLAT LEAF SOLID WOOD SINGLE DOOR WITH REAL STRAIGHT GRAINED OAK WOOD VENEER AND GREY TINTED SATIN FINISH. SOLID WOOD FRAME AND ARCHITRAVE TO MATCH DOOR LEAF.

DOOR FRAME DETAIL : REFER TO SEPARATE DRAWING – ID811
DOOR HARDWARE: REFER TO SEPARATE SCHEDULE – ARC08-1-3 DH01

D05

Qty. 02

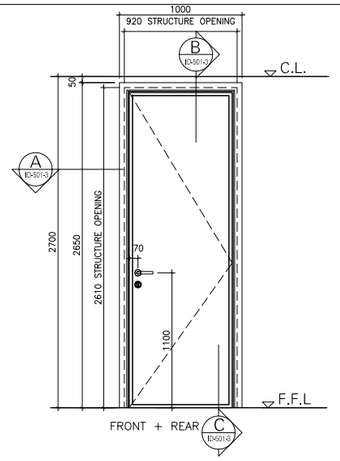

DOOR DESCRIPTION : WATER RESISTANT FLAT LEAF SOLID WOOD SINGLE DOOR WITH REAL STRAIGHT GRAINED LIGHT OAK WOOD VENEER AND GREY TINTED SATIN FINISH. SOLID WOOD FRAME AND ARCHITRAVE TO MATCH DOOR LEAF.

DOOR FRAME DETAIL : REFER TO SEPARATE DRAWING – ID811
DOOR HARDWARE: REFER TO SEPARATE SCHEDULE – ARC08-1-3 DH01

D06

Qty. 01

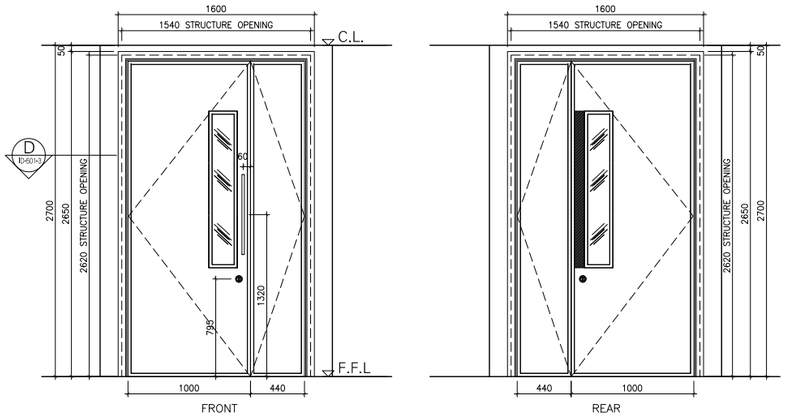

DOOR DESCRIPTION : FLAT LEAF SOLID WOOD DOUBLE DOOR SET WITH REAL STRAIGHT GRAINED LIGHT OAK WOOD VENEER AND GREY TINTED SATIN FINISH. SOLID WOOD FRAME AND ARCHITRAVE TO MATCH DOOR LEAF. WITH VISION PANEL. VISION PANEL WITH CLEAR GLASS.

DOOR AND FRAME DETAIL : REFER TO SEPARATE DRAWING – ID811
DOOR HARDWARE: REFER TO SEPARATE SCHEDULE – ARC08-1-3 DH01

D07

Qty. 01

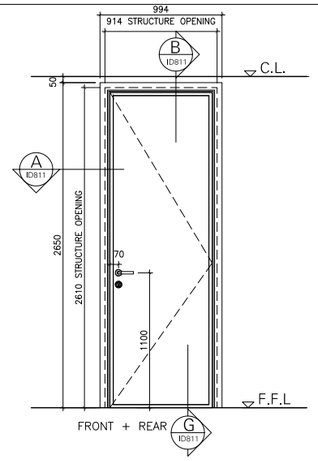

DOOR DESCRIPTION : FLAT LEAF SOLID WOOD SINGLE DOOR WITH REAL STRAIGHT GRAINED OAK WOOD VENEER AND GREY TINTED SATIN FINISH. SOLID WOOD FRAME AND ARCHITRAVE TO MATCH DOOR LEAF.

REQUIREMENTS FOR ACCESS CONTROL AND OTHER HARDWARE TO BE CO-ORDINATED WIT SECURITY/IT CONSULTANT.

DOOR DETAIL : REFER TO SEPARATE DRAWING – ID-301-3
DOOR HARDWARE: REFER TO SEPARATE SCHEDULE – ARC08-1-3 DH01

GENERAL NOTES

1. This drawing shall be read in conjuction with all other relevant architectural,structural & electrical drawings including those of other consultants.
2. It is the responsability of contractors & manufacturers to check all relevant site dimensions prior to the start of construction or manufacture.
3. All materials and components must be installed on site in accordance with manufacturer's instructions , shop drawings and standard details.
4. All dimensions are in millemeters unless noted otherwise.
5. Full working drawings, specifications and samples are to be provided by Contractor/Supplier for approval prior to manufacture.

NOTES:

- All dimensions are structural opening sizes.
- All office doors to be rated at 30dB R_W Accoustic door seals to jamb and head and threshold drop seals are required.
- All woodwork finishes should be as per approved samples. Contractor to submit samples for approval prior to manufacturing commences.

* Requirements for Access Control and other Hardware to be Co-Ordinated with Security/IT Consultant.

* Requirements for Digital Signage to be Co-Ordinated with IT/AV Consultant.

FINISHES

* Please Refer to Finishing Schedule for full specifications;
ARC08-1-3 FIN

KEY PLAN

REV.#	GENERAL NOTES	DRAWN BY	CHECKED BY	APPROVED BY	DATE
	INITIAL ISSUE	MP	AM	SM	2022.08.18

PROJECT TITLE: ARCAPITA - ATLANTA
REFERENCE: ARC08 G

DRAWING TITLE: DOORS KEY PLAN

DRAWING NUMBER: ID-501-3
REVISION: -

SCALE	FORMAT	ADDITIONAL NOTES	DESIGN DEVELOPMENT
1:75	A1		

SIMA MALAK + ALSSAMOURE
DESIGN ASSOCIATES
P.O. Box 15707 - Riyadh 11454 KSA
Tel. 01 441 4963 - Fax. 01 441 3867
simals@simals.com

©SIMA MALAK + ALSSAMOURE DESIGN ASSOCIATES (سما) 2003
This document including all drawing and text is the property and copyright of SIMA MALAK + ALSSAMOURE DESIGN ASSOCIATES for use solely with respect to this Project and shall not be copied or reproduced by any means except by agreement in writing from SIMA MALAK + ALSSAMOURE DESIGN ASSOCIATES.

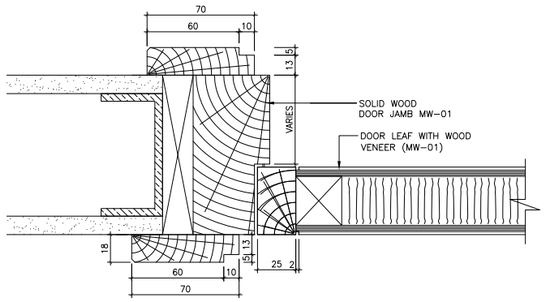

A SECTION (TYPICAL DOOR FRAME DETAIL)
SC.1:2

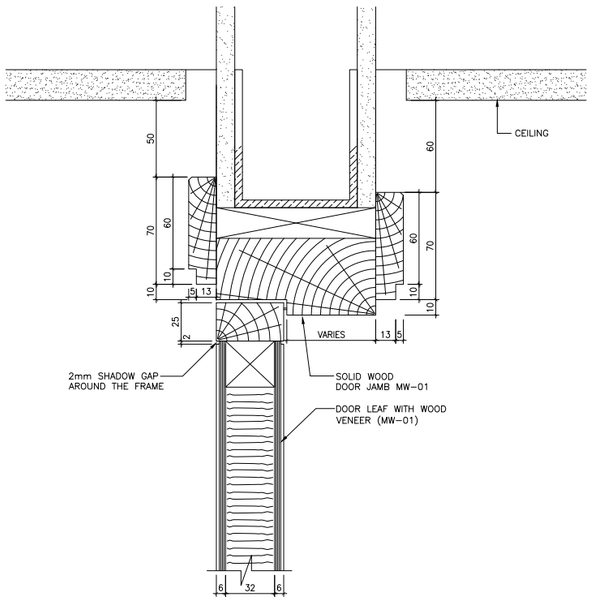

B SECTION (TYPICAL DOOR FRAME DETAIL)
SC.1:2

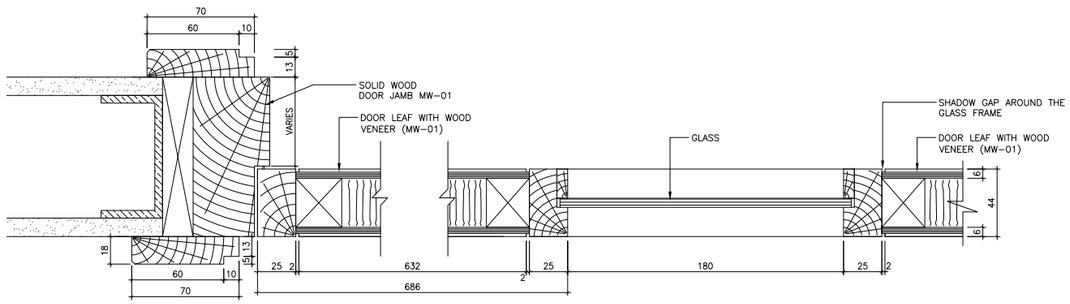

D SECTION (TYPICAL DOOR FRAME DETAIL)
SC.1:2

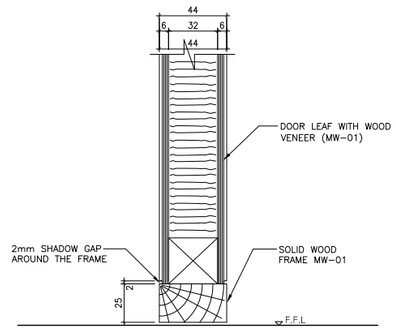

C SECTION (TYPICAL DOOR DETAIL)
SC.1:2

GENERAL NOTES

1. This drawing shall be read in conjuction with all other relevant architectural,structural & electrical drawings including those of other consultants.
2. It is the responsability of contractors & manufacturers to check all relevant site dimensions prior to the start of construction or manufacture.
3. All materials and components must be installed on site in accordance with manufacturer's instructions , shop drawings and standard details.
4. All dimensions are in millemeters unless noted otherwise.
5. Full working drawings, specifications and samples are to be provided by Contractor/Supplier for approval prior to manufacture.

NOTES:

- All dimensions are structural opening sizes.
- All office doors to be rated at 30dB R_W Accoustic door seals to jamb and head and threshold drop seals are required.
- All woodwork finishes should be as per approved samples. Contractor to submit samples for approval prior to manufacturing commences.

FINISHES

* Please Refer to Finishing Schedule for full specifications;
ARC08-1-3 FIN

KEY PLAN

REV.#	GENERAL NOTES	DRAWN BY	CHECKED BY	APPROVED BY	DATE
	INITIAL ISSUE	MP	AM	SM	2022.08.18

PROJECT TITLE: ARCAPITA - ATLANTA
REFERENCE: ARC08 G

DRAWING TITLE: DOORS TYPICAL DETAILS

DRAWING NUMBER: ID-501-3
REVISION: -

SCALE	FORMAT	ADDITIONAL NOTES	DESIGN DEVELOPMENT
1:75	A1		

SIMA MALAK + ALSSAMOURE
DESIGN ASSOCIATES
P.O. Box 15707 - Riyadh 11454 KSA
Tel. 01 441 4963 - Fax. 01 441 3867
simals@simals.com

©SIMA MALAK + ALSSAMOURE DESIGN ASSOCIATES (سما) 2003
This document including all drawing and text is the property and copyright of SIMA MALAK + ALSSAMOURE DESIGN ASSOCIATES for use solely with respect to this Project and shall not be copied or reproduced by any means except by agreement in writing from SIMA MALAK + ALSSAMOURE DESIGN ASSOCIATES.

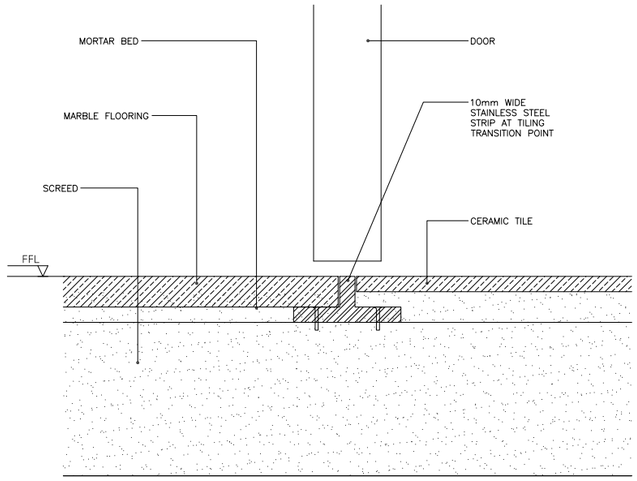

01 FLOOR TRANSITION DETAIL (MARBLE + CERAMIC TILE DETAIL)
SC. 1:2

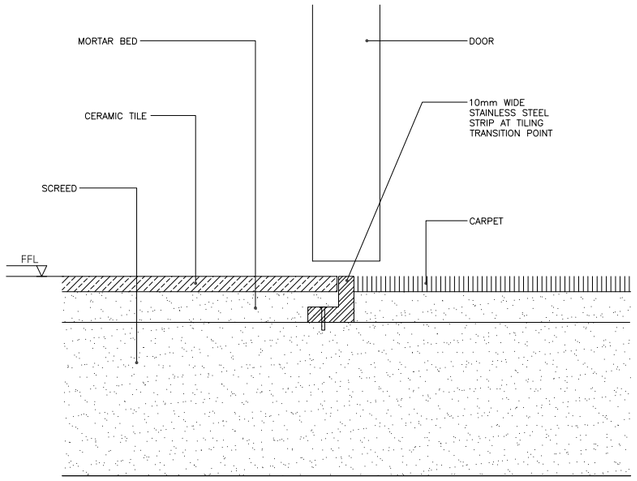

02 FLOOR TRANSITION DETAIL (CERAMIC TILE DETAIL)
SC. 1:2

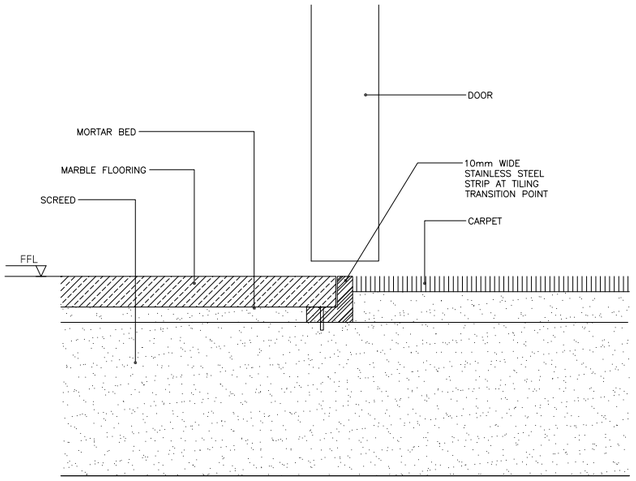

03 FLOOR TRANSITION DETAIL (MARBLE & CARPET DETAIL)
SC. 1:2

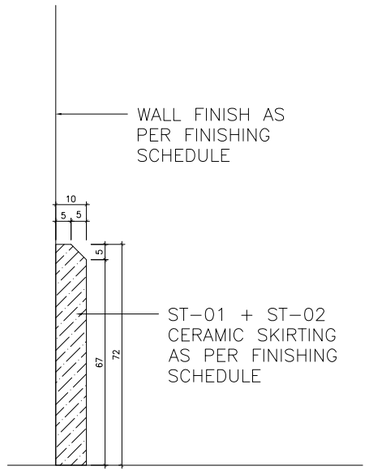

01 TYPICAL CERAMIC SKIRTING DETAIL (ST-01 + ST-02)
SC.1:1

KITCHENETTE (1-028) AND RESTROOM (1–05,1-006)

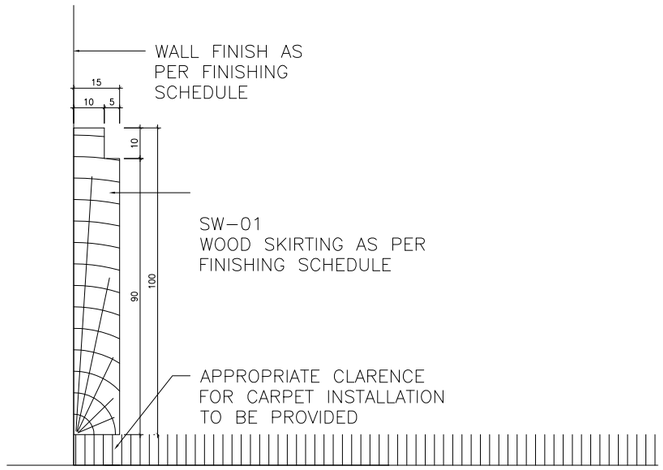

02 TYPICAL WOOD SKIRTING DETAIL (SW-01)
SC.1:1

ALL AREAS (EXCEPT RECEPTION, KITCHENETTE AND RESTROOM)

GENERAL NOTES

1. This drawing shall be read in conjuction with all other relevant architectural,structural & electrical drawings including those of other consultants.
2. It is the responsability of contractors & manufacturers to check all relevant site dimensions prior to the start of construction or manufacture.
3. All materials and components must be installed on site in accordance with manufacturer's instructions , shop drawings and standard details.
4. All dimensions are in millemeters unless noted otherwise.
5. Full working drawings, specifications and samples are to be provided by Contractor/Supplier for approval prior to manufacture.

NOTES FOR MANUFACTURER:

* Construction methods shown on drawings are suggested methods only.
* Construction methods must be discussed between designer and manufacturer prior to Fabrication.
* All details must be adhered to any deviation must be discussed with the designer prior to manufacture.
* Structure to be specified by manufacturer considering practicalities and the aesthetics of the design.

FINISHES

* Please Refer to Finishing Schedule for full specifications:
ARC08-1-3 FIN

KEY PLAN

REV.#	GENERAL NOTES	DRAWN BY	CHECKED BY	APPROVED BY	DATE
X	INITIAL ISSUE	MP	AM	SM	2022.08.18

PROJECT TITLE: ARCAPITA - ATLANTA
REFERENCE: ARC08 G

DRAWING TITLE: TYPICAL DETAILS

DRAWING NUMBER: ID-601
REVISION: -

SCALE	FORMAT	ADDITIONAL NOTES	DESIGN DEVELOPMENT
1:75	A1		

SIMA MALAK + ALSSAMOURE
DESIGN ASSOCIATES
P.O. Box 15707 - Riyadh 11454 KSA
Tel. 01 441 4963 - Fax. 01 441 3867
simals@simals.com

©SIMA MALAK + ALSSAMOURE DESIGN ASSOCIATES (ـــــــ) 2003
This document including all drawing and text is the property and copyright of SIMA MALAK + ALSSAMOURE DESIGN ASSOCIATES for use solely with respect to this Project and shall not be copied or reproduced by any means except by agreement in writing from SIMA MALAK + ALSSAMOURE DESIGN ASSOCIATES.

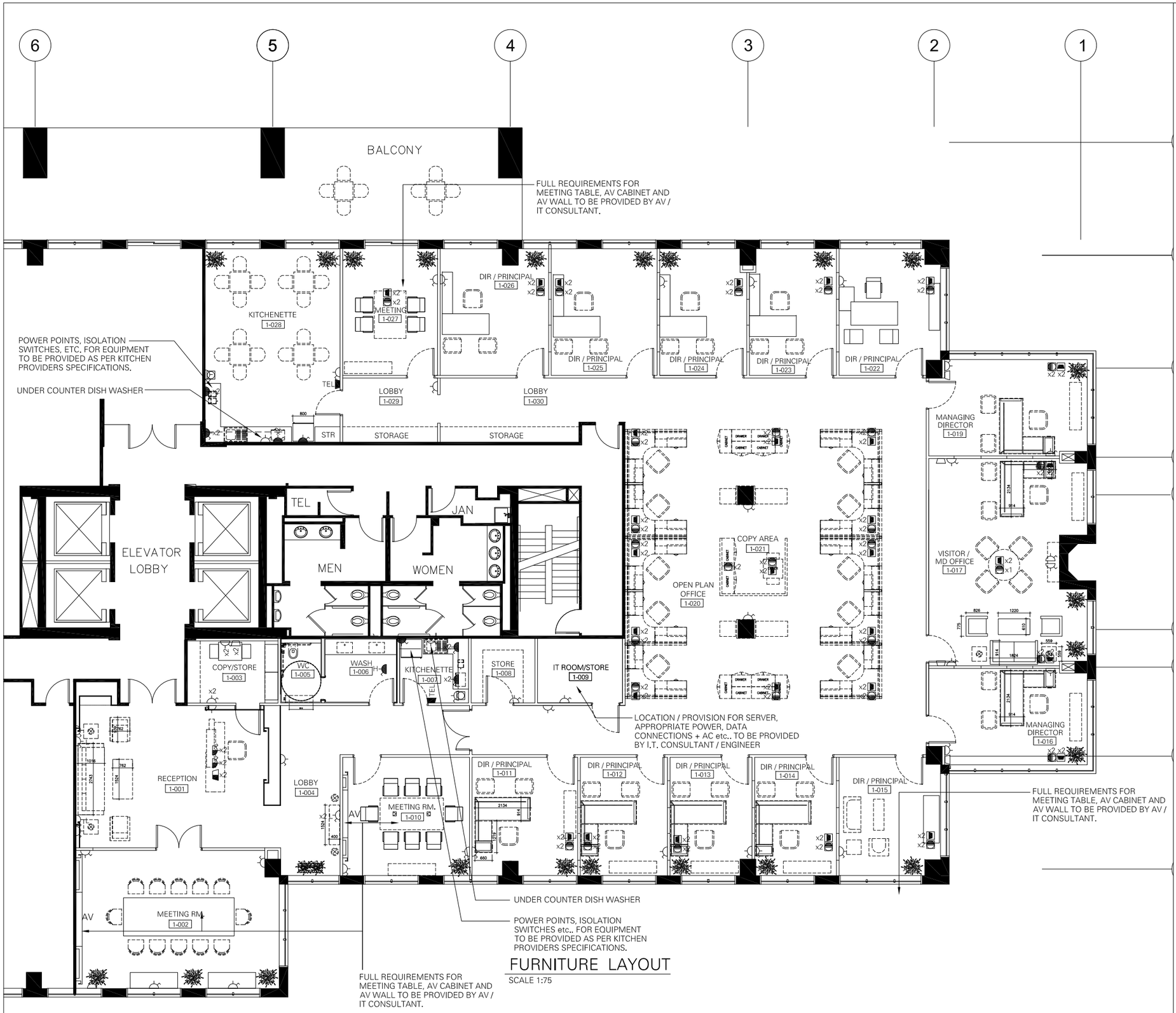

FURNITURE LAYOUT

SCALE 1:75

NOTES FOR MANUFACTURE:

* Construction methods shown on drawings are suggested methods only.

* Full working drawings and samples are to be provided by contractor for approval prior to manufacture.

FINISHES

* Samples of all finishes are to be provided by the contractor to be approved by the designer prior to manufacture / construction.

ELECTRICAL SYMBOLS:

- 220 OUTLET
- DATA OUTLET
- SURFACE MOUNTED POWER OUTLET INCORPORATED INTO DESKING
- 220 OUTLET @ HIGH LEVEL
- H — 220 OUTLET FOR HAND DRYER
- DATA OUTLET @ HIGH LEVEL
- x2 — DOUBLE SOCKET 220 OUTLET
- x2 — DOUBLE SOCKET 220 OUTLET @ HIGH LVL.
- L — WALL SOCKET POWER IN LIGHTING CIRCUIT - SINGLE
- x2 L — WALL SOCKET POWER IN LIGHTING CIRCUIT - DOUBLE
- TEL — WALL MOUNTED TELEPHONE OUTLET
- CONCEALED POWER OUTLET INCORPORATED INTO FURNITURE
- CONCEALED DATA OUTLET-NETWORK INCORPORATED INTO FURNITURE
- FLOOR POWER OUTLET
- FLOOR DATA OUTLET-NETWORK

ALL OUTLETS
Supplier: MK
Range: ASPECT
Cover plate: Brushed stainless steel
Black Inserts
Rocker Switches: Brushed stainless steel

Requirement for Control devices to be provided by Security consultant.

TYPICAL SOCKET POSITIONS:

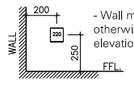

- Wall mounted sockets (unless otherwise specified on plan or elevation)

SKIRTING AS PER ELEVATION

TYPICAL LIGHT SWITCHES POSITIONS:

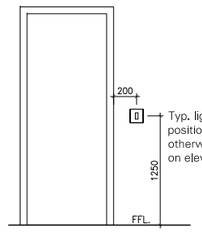

Typ. light switch position unless otherwise shown on elevation

NOTES

1. For details of requirements for meeting / conference tables av cabinets and av wall refer to consultants AV drawings and specifications.

2. TV and telephone connections are provided through data points.

3. Please refer to relevant sub consultants drawings and specifications for audio visual, Security and IT requirements.

GENERAL NOTES

1. This drawing shall be read in conjuction with all other relevant architectural,structural & electrical drawings including those of other consultants.

2. It is the responsability of contractors & manufacturers to check all relevant site dimensions prior to the start of construction or manufacture.

3. All materials and components must be installed on site in accordance with manufacturer's instructions , shop drawings and standard details.

4. All dimensions are in millemeters unless noted otherwise.

5. Full working drawings, specifications and samples are to be provided by Contractor/Supplier for approval prior to manufacture.

NOTES FOR MANUFACTURE:

* Construction methods shown on drawings are suggested methods only.
* Full working drawings and samples are to be provided by contractor for approval prior to manufacture.

*Please refer to relevant sub consultants drawings and Specifications for Audio visual, security and I.T. requirements.

KEY PLAN

REV.#	GENERAL NOTES	DRAWN BY	CHECKED BY	APPROVED BY	DATE
A	GEN. REV.	AC	AM	SM	2022.06.27
	INITIAL ISSUE	AC	AM	SM	2022.06.15

PROJECT TITLE	REFERENCE
ARCAPITA - ATLANTA	ARC08 G

DRAWING TITLE: POWER AND COMMUNICATION LAYOUT

DRAWING NUMBER	REVISION
E-101	A

SCALE	FORMAT	ADDITIONAL NOTES	DESIGN DEVELOPMENT
1:75	A1		

SIMA MALAK + ALSSAMOURE DESIGN ASSOCIATES
P.O. Box 15707 - Riyadh 11454 KSA
Tel. 01 441 4963 - Fax. 01 441 3867
simals@simals.com

©SIMA MALAK + ALSSAMOURE DESIGN ASSOCIATES (سما) 2003
This document including all drawing and text is the property and copyright of SIMA MALAK + ALSSAMOURE DESIGN ASSOCIATES for use solely with respect to this Project and shall not be copied or reproduced by any means except by agreement in writing from SIMA MALAK + ALSSAMOURE DESIGN ASSOCIATES.

ARC08 - ARCAPITA - ATLANTA

INTERIOR DESIGN PROPOSAL

5 JULY 2022

SIMA MALAK + ALSSAMOURE
DESIGN ASSOCIATES

P.O. Box 15707 - Riyadh 11454 KSA
Tel. 01 441 4963 - Fax. 01 441 3867
simals@simals.com

WOOD PANELING
(WITH LIGHTER FINISH)

RECEPTION DESK
(WITH LIGHTER FINISH)

REAR WALL (WITH GLASS CENTRAL PANEL)

FINISH FOR RECEPTION DESK

ARC08 - ARCAPITA - ATLANTA

INTERIOR PROPOSAL - PROPOSED RECEPTION CONCEPTS

P101A - 27 JUNE 2022

SIMA MALAK + ALSSAMOURE
DESIGN ASSOCIATES
P.O. Box 15707 - Riyadh 11454 KSA
Tel. 01 441 4903 - Fax. 01 441 3867
SIMALS@SIMALS.COM

SOFA

TABLE LAMP

CEILING LIGHT

ARM CHAIR

SIDE TABLE

COFFEE TABLE

RECEPTION CHAIR

ARC08 - ARCAPITA - ATLANTA

INTERIOR PROPOSAL - FURNITURE SELECTION - RECEPTION

P411B - 5 JULY 2022

SIMA MALAK + ALSSAMOURE
DESIGN ASSOCIATES
P.O. Box 15707 - Riyadh 11454 KSA.
Tel. 01 441 4963 - Fax. 01 441 3867
SIMALS@SIMALS.COM

ARC08 – ARCAPITA – ATLANTA

PROPOSED MATERIAL SELECTION - RECEPTION (1-001)

P201A – 27 JUNE 2022

SIMA MALAK + ALSSAMOURE
DESIGN ASSOCIATES
P.O. Box 15707 - Riyadh 11454 KSA
Tel. 01 441 4863 - Fax. 01 441 3867
SIMALS@SIMALS.COM

UPHOLSTERY FOR SOFA AND CHAIRS IN RECEPTION AREA

UPHOLSTERY FOR BENCH IN LOBBY (1-004)

ARC08 – ARCAPITA – ATLANTA

PROPOSED FABRIC SELECTION - AREA (1-001) + LOBBY (1-004)

P201B – 5 JUNLY 2022

SIMA MALAK + ALBSAMOURE
DESIGN ASSOCIATES
P.O. Box 15707 - Riyadh 11454 KSA
Tel. 01 441 4063 - Fax. 01 441 3887
SIMAL5@SIMALS.COM

CONSOLE

FLOOR STANDING LAMP

BENCH

SIMA MALAK + ALSSAMOURE
DESIGN ASSOCIATES
P.O. Box 15707 - Riyadh 11454 KSA.
Tel. 01 441 4983 - Fax. 01 441 3867
SIMALS@SIMALS.COM

AV WALL (WITH LIGHTER FINISH)

AV WALL (WITH LIGHTER FINISH)

CEILING

CEILING

AV WALL

CEILING / LIGHTING

AV WALL

PARTITION WITH FROSTED FINISH

ARC08 - ARCAPITA - ATLANTA

INTERIOR PROPOSAL - MEETING / CONFERENCE ROOM CONCEPTS

P102A - 27 JUNE 2022

SIMA MALAK + ALSSAMOURE
DESIGN ASSOCIATES
P.O. Box 15707 - Riyadh 11454 KSA
Tel. 01 441 4903 - Fax. 01 441 3867
SIMALS@SIMALS.COM

MEETING TABLE

CREDENZA

MEETING CHAIR

THICKET ! M75, PALDAO, MATTE
WOOD FINISHES

BRUSHED STAINLESS STEEL

ARC08 - ARCAPITA - ATLANTA

INTERIOR PROPOSAL - FURNITURE SELECTION - CONFERENCEROOM (1-002)

P413B - 5 JULY 2022

SIMA MALAK + ALSSAMOURE
DESIGN ASSOCIATES
P.O. Box 15707 - Riyadh 11454 KSA
Tel. 01 441 4983 - Fax. 01 441 3867
SIMALS@SIMALS.COM

MEETING TABLE

CREDENZA

MEETING CHAIR

THICKET | M75, PALDAO, MATTE
WOOD FINISHES

BRUSHED STAINLESS STEEL

ARC08 - ARCAPITA - ATLANTA

INTERIOR PROPOSAL - FURNITURE SELECTION - MEETING ROOM (1-010) AND (1-027)
P414B - 5 JULY 2022

SIMA MALAK + ALSSAMOURE
DESIGN ASSOCIATES
P.O. Box 15707 - Riyadh 11454 KSA.
Tel. 01 441 4983 - Fax. 01 441 3867
SIMALS@SIMALS.COM

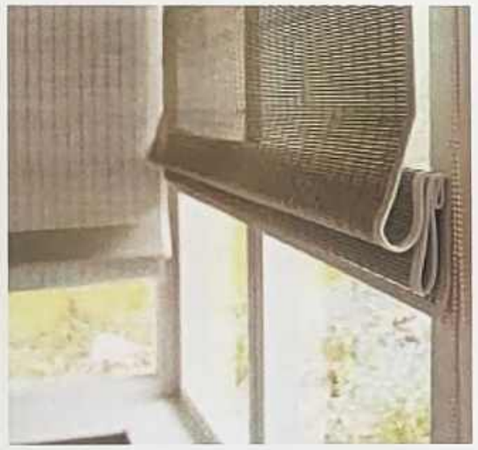

ROMAN BLINDS

ROLLER BLINDS

ROMAN BLINDS FABRIC

FOR ALL AREAS

ROLLER BLINDS MATERIAL
(OPTION – 01)

FOR MEETING ROOMS

ROLLER BLINDS MATERIAL
(OPTION – 02)

ARC08 – ARCAPITA – ATLANTA

PROPOSED MATERIAL SELECTION – ROMAN AND ROLLER BLINDS

P202A – 27 JUNE 2022

SIMA MALAK + ALSSAMOURE
DESIGN ASSOCIATES
P.O. Box 15707 - Riyadh 11454 - KSA
Tel. 01 441 6062 - Fax. 01 441 3987
SIMALS@SIMALS.COM

DESK

CREDENZA

DESK CHAIR

MEETING TABLE CHAIR

VISITOR CHAIR OPTIO - 01

MEETING TABLE - OPTION 02

SIMA MALAK + ALSSAMOURE
DESIGN ASSOCIATES
P.O. Box 15707 - Riyadh 11454 KSA.
Tel. 01 441 4983 - Fax. 01 441 3867
SIMALS@SIMALS.COM

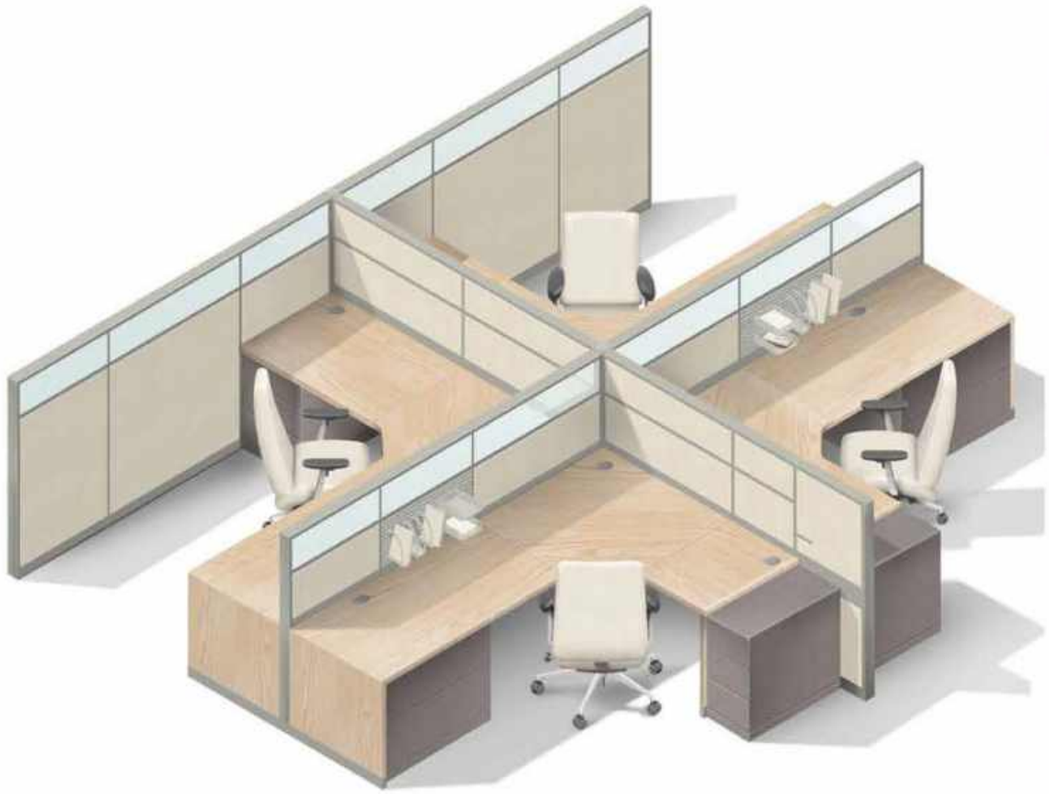

ARC08 - ARCAPITA - ATLANTA

INTERIOR PROPOSAL - FURNITURE SELECTION - OPEN PLAN OFFICE (1-020)

P360B - 5 JULY 2022

SIMA MALAK + ALSSAMOURE
DESIGN ASSOCIATES
P.O. Box 15707 - Riyadh 11454 KSA.
Tel. 01 441 4963 - Fax. 01 441 3867
SIMALS@SIMALS.COM

CARPET TILES

DOORS, SKIRTING + PANELLING

PARTITION FRAMING

WALL PAPER

ARC08 – ARCAPITA – ATLANTA

PROPOSED MATERIAL SELECTION - GENERAL OFFICE AREA

P203 – 15 JUN 2022

SIMA MALAK + ALSSAMOURE
DESIGN ASSOCIATES
P.O. Box 15707 - Riyadh 11454 KSA
Tel. 01 441 4903 - Fax. 01 441 3867
SIMALS@SIMALS.COM

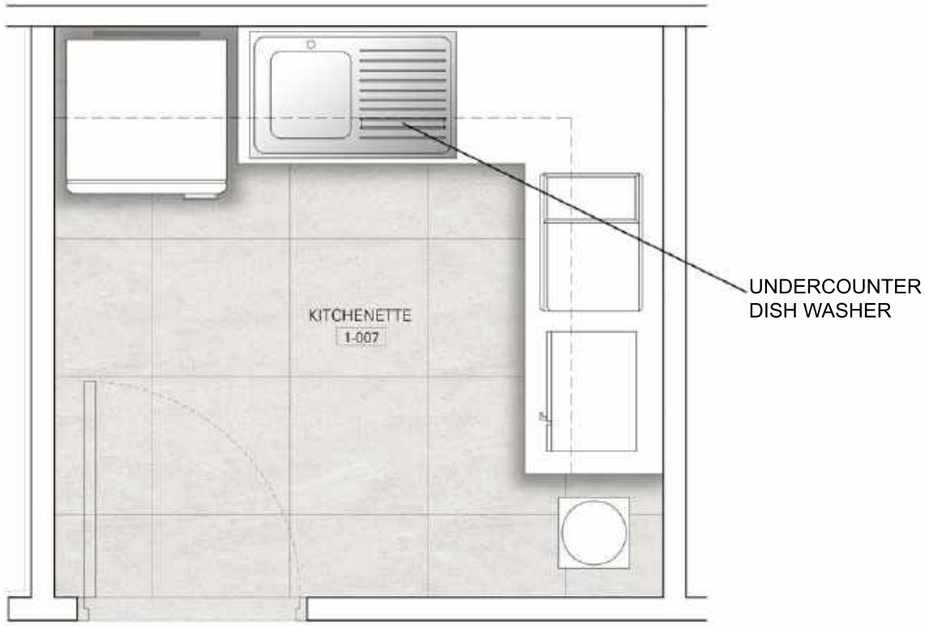

KITCHENETTE PLAN

ELEVATION-1

ELEVATION-2

ARC08

INTERIOR PROPOSAL - KITCHENETTE (1-007) CONCEPT

P114A - 27 JUNE 2022

SIMA MALAK + ALSSAMOURE
DESIGN ASSOCIATES
P.O. Box 15707 - Riyadh 11454 KSA
Tel. 01 441 4963 - Fax. 01 441 3867
SIMALS@SIMALS.COM

CHAIR

TABLE

ARC08 - ARCAPITA - ATLANTA

INTERIOR PROPOSAL - FURNITURE SELECTION - KITCHENETTE (1-028)

P419B - 5 JULY 2022

SIMA MALAK + ALSSAMOURE
DESIGN ASSOCIATES
P.O. Box 15707 - Riyadh 11454 KSA.
Tel. 01 441 4983 - Fax. 01 441 3867
SIMALS@SIMALS.COM

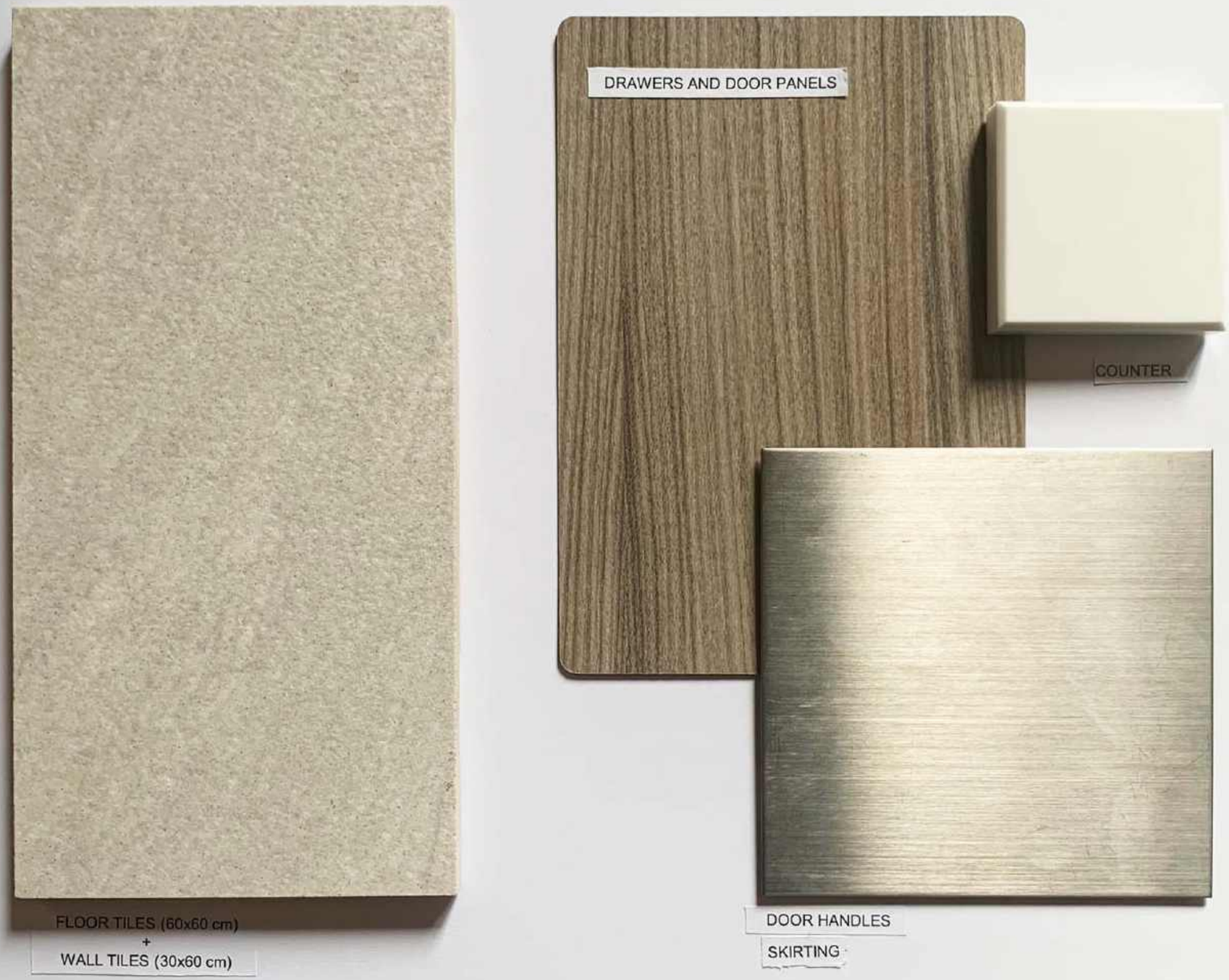

ARC08 – ARCAPITA – ATLANTA

PROPOSED MATERIAL SELECTION – KITCHENETTE (1-007)

P206 – 15 JUN 2022

SIMA MALAK + ALSSAMOURE
DESIGN ASSOCIATES
P.O. Box 15707 - Riyadh 11454 - KSA
Tel. 01 441 4063 - Fax. 01 441 3867
SIMALS@SIMALS.COM

ARC08 - ARCAPITA - ATLANTA

INTERIOR PROPOSAL - FURNITURE SELECTION - TERRACE

P420A - 27 JUNE 2022

SIMA MALAK + ALSSAMOURE
DESIGN ASSOCIATES
P.O. Box 15707 - Riyadh 11454 KSA
Tel. 01 441 4983 - Fax. 01 441 3867
SIMALS@SIMALS.COM

ARC08

INTERIOR PROPOSAL - PROPOSED WC(1-005) + WASH(1-006) PLAN AND ELEVATIONS

P115B - 5 JULY 2022

SIMA MALAK + ALSSAMOURE
DESIGN ASSOCIATES
P.O. Box 15707 - Riyadh 11454 KSA.
Tel. 01 441 4963 - Fax. 01 441 3867
SIMALS@SIMALS.COM

UNDER-MOUNTED SINK

FAUCET

SOAP DISPENSER

PAPER TOWEL DISPENSER
AND WASTE RECEPTACLE

ACTUATOR

HANDSPRAY

HOOK

TOILET PAPER HOLDER

CONCEALED CISTERN

TOILET SEAT

BRUSH HOLDER

HAND DRYER

ARC08

INTERIOR PROPOSAL - SANITARY FIXTURES SELECTION

P501A - 5 JULY 2022

SIMA MALAK + ALSSAMOURE
DESIGN ASSOCIATES
P.O. Box 15707 - Riyadh 11454 KSA.
Tel. 01 441 4963 - Fax. 01 441 3867
SIMALS@SIMALS.COM

WALLS AND FLOORS

VANITY COUNTER

VANITY WOODWORK

WASHROOM WALL

ARC08 – ARCAPITA – ATLANTA

PROPOSED MATERIAL SELECTION - WC (1-005) & WASH (1-006)

P202 – 15 JUN 2022

SIMA MALAK + ALSSAMOURE
DESIGN ASSOCIATES
P.O. Box 15707 - Riyadh 11454 KSA
Tel. 01 441 4963 - Fax. 01 441 3867
SIMALS@SIMALS.COM

ARC08 - ARCAPITA - ATLANTA

INTERIOR PROPOSAL - STORAGE UNIT LOBBY(1-029+1-030) CONCEPTS

P105 - 27 JUNE 2022

SIMA MALAK + ALSSAMOURE
DESIGN ASSOCIATES
P.O. Box 16707 - Riyadh 11464 KSA
Tel. 01 441 4903 - Fax. 01 441 3867
SIMALS@SIMALS.COM

STORAGE UNITS ELEVATION

WOOD FINISH

WALLPAPER

ARC08 - ARCAPITA - ATLANTA

INTERIOR PROPOSAL - STORAGE UNITS (1-029 + 1-030)

P113A - 27 JUNE 2022

SIMA MALAK + ALSSAMOURE
DESIGN ASSOCIATES
P.O. Box 15707 - Riyadh 11454 KSA
Tel. 01 441 4903 - Fax. 01 441 3867
SIMALS@SIMALS.COM