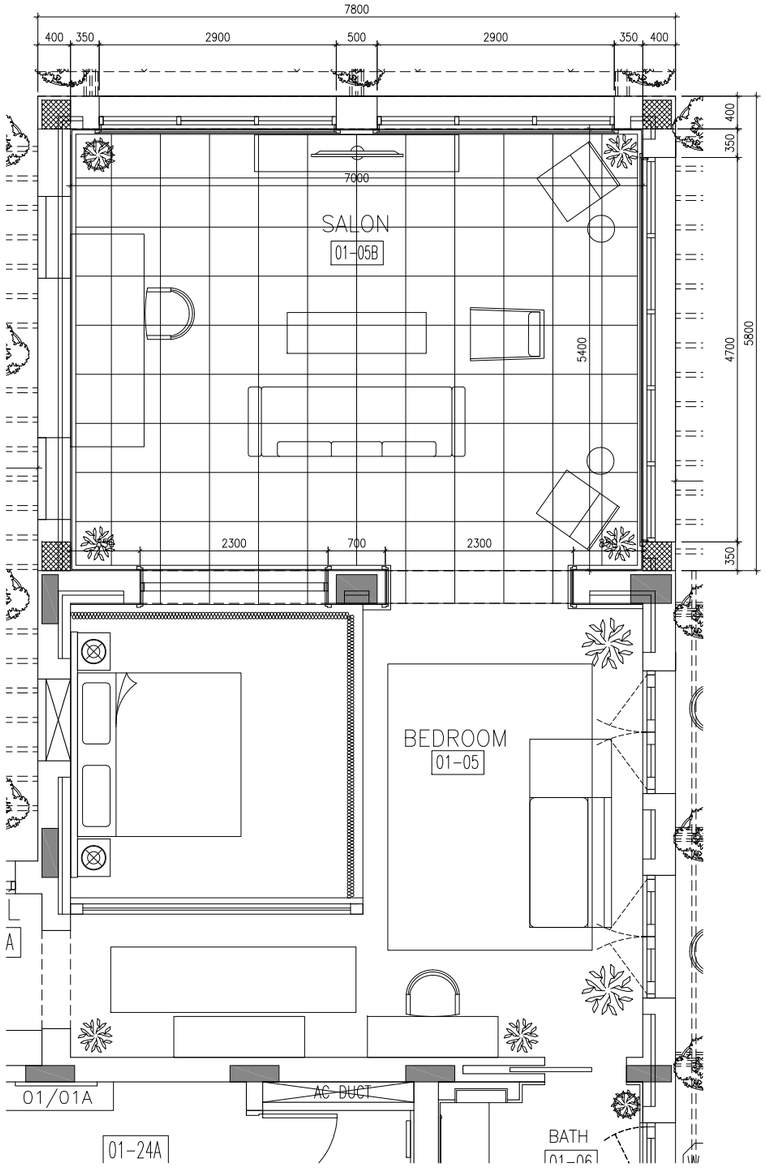

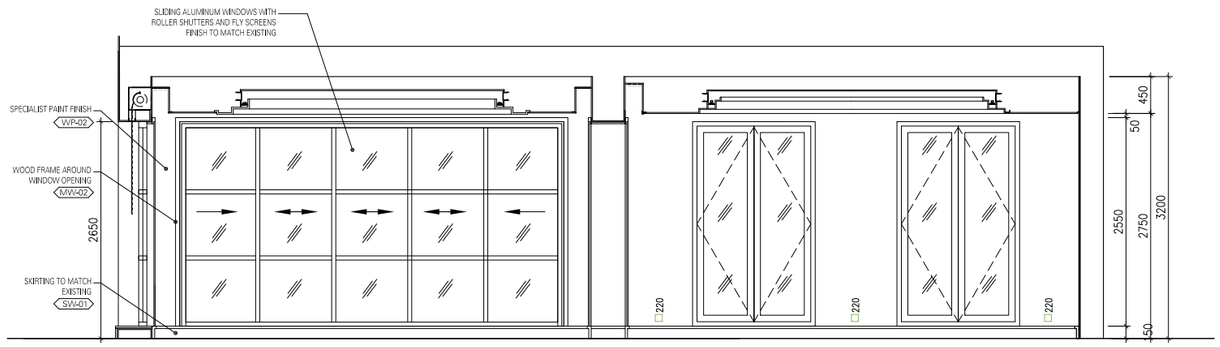

ELEVATION -2

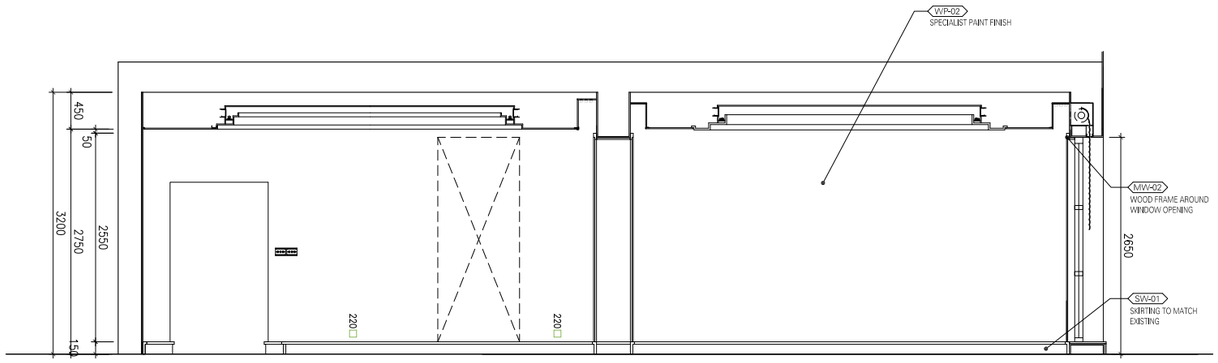

ELEVATION -4

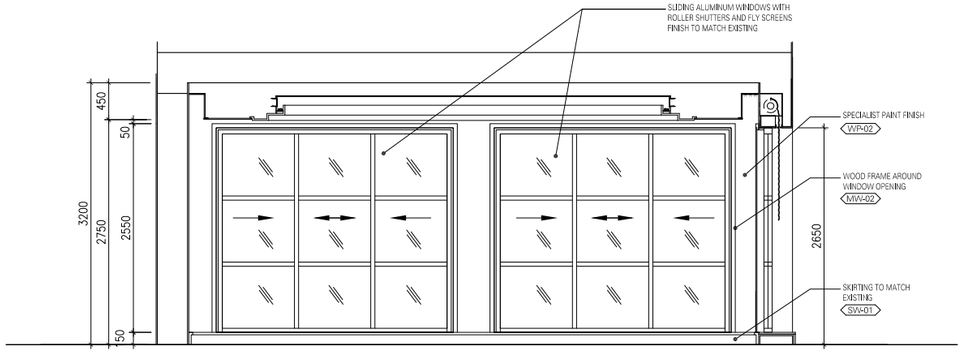

ELEVATION -1

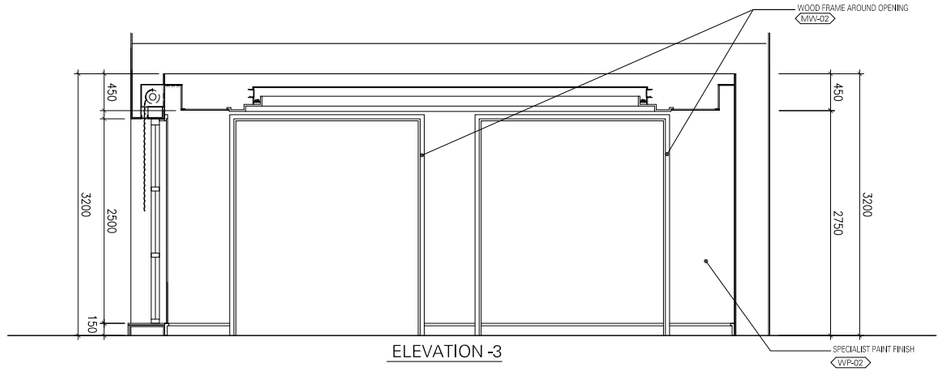

ELEVATION -3

GENERAL NOTES

1. This drawing shall be read in conjuction with all other relevant architectural,structural & electrical drawings including those of other consultants.
2. It is the responsability of contractors & manufacturers to check all relevant site dimensions prior to the start of construction or manufacture.
3. All materials and components must be installed on site in accordance with manufacturer's instructions , shop drawings and standard details.
4. All dimensions are in millemeters unless noted otherwise.
5. Full working drawings, specifications and samples are to be provided by Contractor/Supplier for approval prior to manufacture.

LEGEND :

- Finish Transition / Change in Material

KEY PLAN

REV.#	GENERAL NOTES	DRAWN BY	CHECKED BY	APPROVED BY	DATE
	INITIAL ISSUE	AC	AM	AM	2024.05.09

PROJECT TITLE: SAF-RIYADH — REFERENCE: SAF01 G

DRAWING TITLE: FIRST FLOOR SALON (01-05B) PLAN AND ELEVATIONS

DRAWING NUMBER: SK-128 — REVISION: -

SCALE	FORMAT	ADDITIONAL NOTES	DESIGN DEVELOPMENT
1:75	A1		

SIMA MALAK + ALSSAMOURE
DESIGN ASSOCIATES
P.O. Box 15707 - Riyadh 11454 KSA
Tel. 01 441 4963 - Fax. 01 441 3867
simals@simals.com

©SIMA MALAK + ALSSAMOURE DESIGN ASSOCIATES (سما) 2003
This document including all drawing and text is the property and copyright of SIMA MALAK + ALSSAMOURE DESIGN ASSOCIATES for use solely with respect to this Project and shall not be copied or reproduced by any means except by agreement in writing from SIMA MALAK + ALSSAMOURE DESIGN ASSOCIATES.

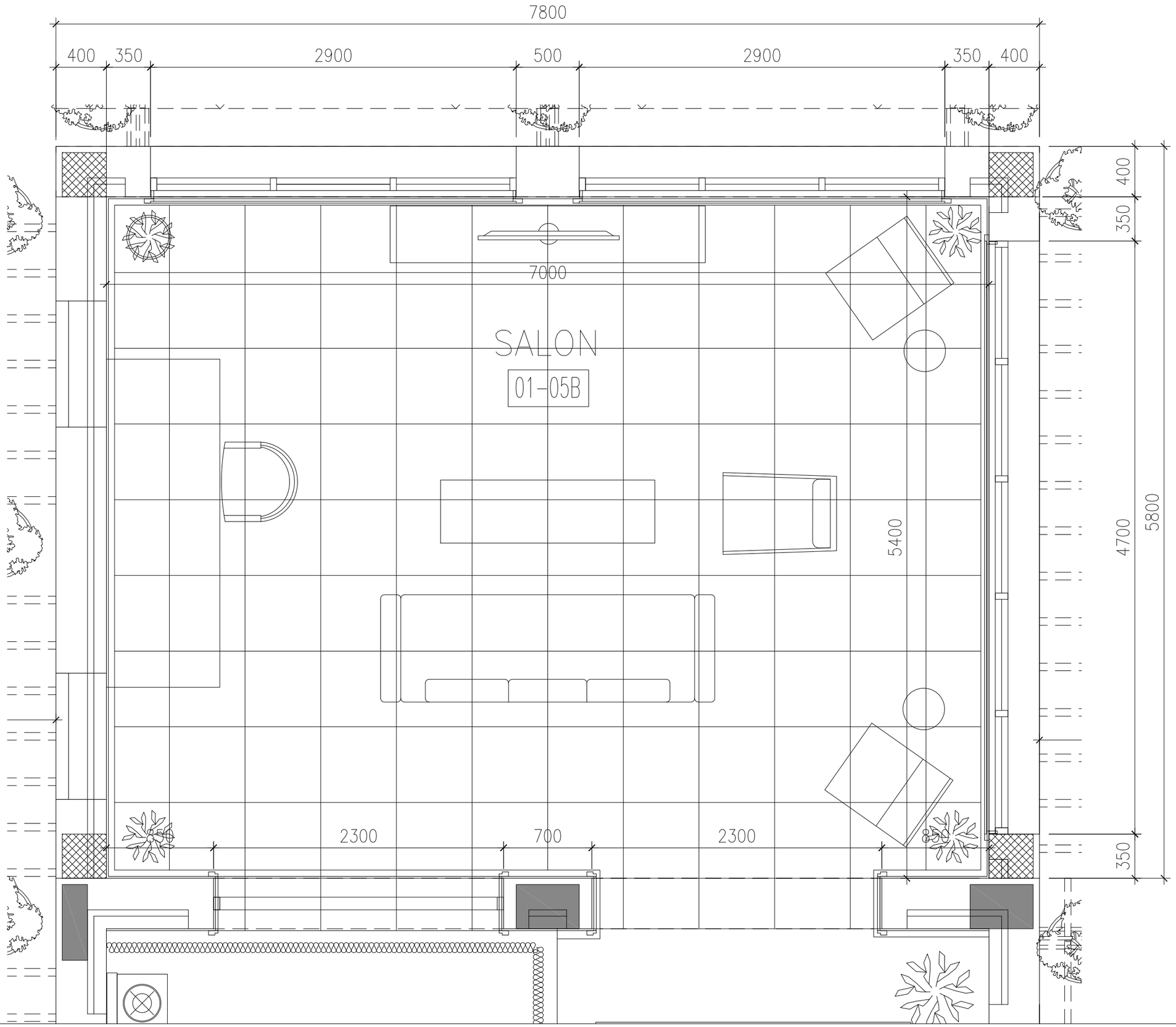

GENERAL NOTES

1. This drawing shall be read in conjuction with all other relevant architectural,structural & electrical drawings including those of other consultants.
2. It is the responsability of contractors & manufacturers to check all relevant site dimensions prior to the start of construction or manufacture.
3. All materials and components must be installed on site in accordance with manufacturer's instructions , shop drawings and standard details.
4. All dimensions are in millemeters unless noted otherwise.
5. Full working drawings, specifications and samples are to be provided by Contractor/Supplier for approval prior to manufacture.

LEGEND :

- Finish Transition / Change in Material

KEY PLAN

REV.#	GENERAL NOTES	DRAWN BY	CHECKED BY	APPROVED BY	DATE
X	INITIAL ISSUE	AC	AM	AM	2025.01.15

PROJECT TITLE: SAF-RIYADH

REFERENCE: SAF01 G

DRAWING TITLE: FIRST FLOOR SALON (01-05B) PROPOSSED TILING LAYOUT

DRAWING NUMBER: SK-136

REVISION: -

SCALE	FORMAT	ADDITIONAL NOTES	DESIGN DEVELOPMENT
1:30	A1		

SIMA MALAK + ALSSAMOURE
DESIGN ASSOCIATES
P.O. Box 15707 - Riyadh 11454 KSA
Tel. 01 441 4963 - Fax. 01 441 3867
simals@simals.com

©SIMA MALAK + ALSSAMOURE DESIGN ASSOCIATES (سما) 2003
This document including all drawing and text is the property and copyright of SIMA MALAK + ALSSAMOURE DESIGN ASSOCIATES for use solely with respect to this Project and shall not be copied or reproduced by any means except by agreement in writing from SIMA MALAK + ALSSAMOURE DESIGN ASSOCIATES.

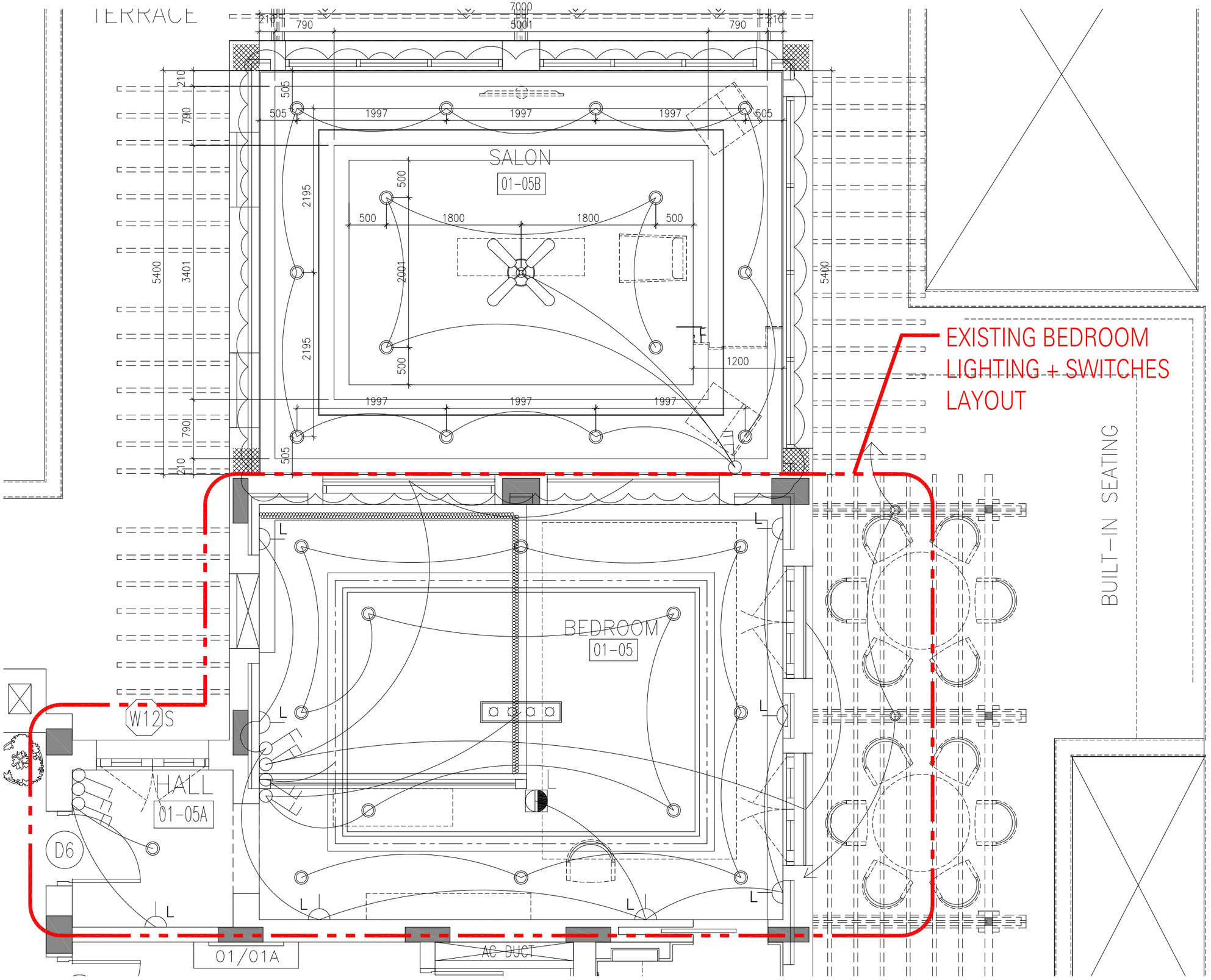

BEDROOM + SALON LIGHTING LAYOUT

SCALE 1:50

GENERAL NOTES

1. This drawing shall be read in conjuction with all other relevant architectural,structural & electrical drawings including those of other consultants.
2. It is the responsability of contractors & manufacturers to check all relevant site dimensions prior to the start of construction or manufacture.
3. All materials and components must be installed on site in accordance with manufacturer's instructions , shop drawings and standard details.
4. All dimensions are in millemeters unless noted otherwise.
5. Full working drawings, specifications and samples are to be provided by Contractor/Supplier for approval prior to manufacture.

LEGEND :

- Chandelier
- Recessed Downlight
- 3 Gang Switch

TYPICAL LAYOUT OF SWITCHES

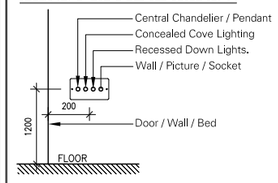

KEY PLAN

REV.#	GENERAL NOTES	DRAWN BY	CHECKED BY	APPROVED BY	DATE
B	CLG+LTG REV.	AC	AM	SM	2025.04.29
A	GENEAL REV.	MP	AM	SM	2024.07.03
X	INITIAL ISSUE	AC	AM	AM	2024.05.09

PROJECT TITLE: SAF-RIYADH

REFERENCE: SAF01 G

DRAWING TITLE: FIRST FLOOR - EXTENSION BEDROOM + SALON CEILING + LIGHTING LAYOUT

DRAWING NUMBER: SK-130

REVISION: B

SCALE	FORMAT	ADDITIONAL NOTES	DESIGN DEVELOPMENT
1:50	A1		

SIMA MALAK + ALSSAMOURE
DESIGN ASSOCIATES
P.O. Box 15707 - Riyadh 11454 KSA
Tel. 01 441 4963 - Fax. 01 441 3867
simals@simals.com

©SIMA MALAK + ALSSAMOURE DESIGN ASSOCIATES (صمم) 2003
This document including all drawing and text is the property and copyright of SIMA MALAK + ALSSAMOURE DESIGN ASSOCIATES for use solely with respect to this Project and shall not be copied or reproduced by any means except by agreement in writing from SIMA MALAK + ALSSAMOURE DESIGN ASSOCIATES.

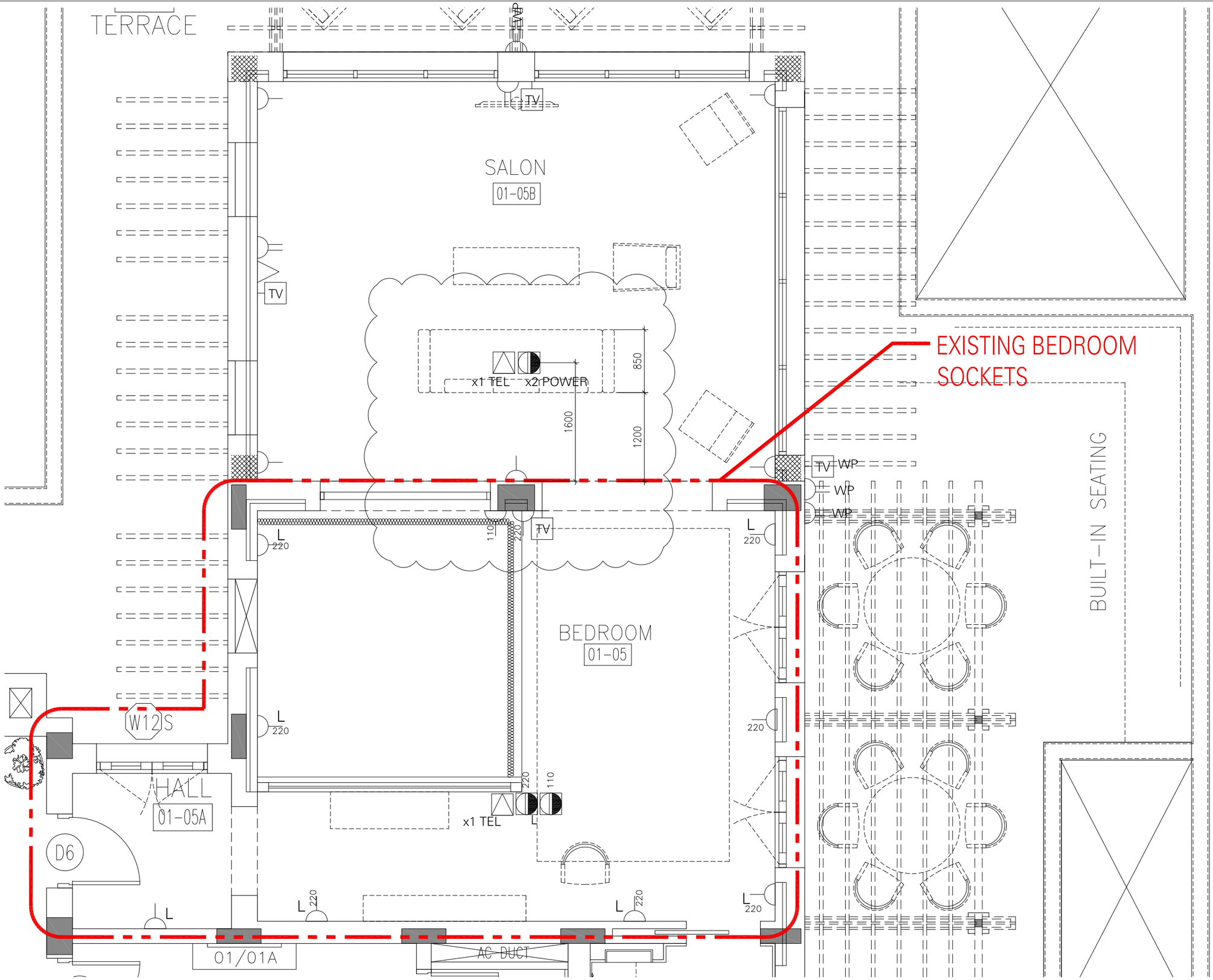

BEDROOM + SALON POWER & COMM. LAYOUT

SCALE 1:50

GENERAL NOTES

1. This drawing shall be read in conjuction with all other relevant architectural,structural & electrical drawings including those of other consultants.
2. It is the responsability of contractors & manufacturers to check all relevant site dimensions prior to the start of construction or manufacture.
3. All materials and components must be installed on site in accordance with manufacturer's instructions , shop drawings and standard details.
4. All dimensions are in millemeters unless noted otherwise.
5. Full working drawings, specifications and samples are to be provided by Contractor/Supplier for approval prior to manufacture.

LEGEND :

- TV — Double wall socket for satellite television system
- Wall socket power single
- Wall socket power double
- Wall socket telephone
- Floor socket telephone
- Floor socket power - Double

NOTE:
-All External sockets to be waterproof. Contractor to submit samples for Review/Approval.
-Appropriate provisions to be provided for security system, It system etc... Requirements and specifications to be provided by specialist consultants.

TYPICAL SOCKET POSITIONS :

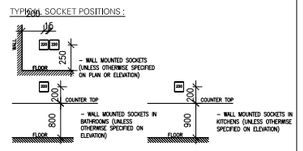

KEY PLAN

REV.#	GENERAL NOTES	DRAWN BY	CHECKED BY	APPROVED BY	DATE
B	SOCKET LOCATION REV.	AC	AM	SM	2025.01.30
A	GENERALREV.	MP	AM	SM	2024.07.03
	INITIAL ISSUE	AC	AM	AM	2024.05.09

PROJECT TITLE	REFERENCE
SAF-RIYADH	SAF01 G

DRAWING TITLE
FIRST FLOOR - EXTENSION
BEDROOM + SALON
POWER + COMMUNICATION LAYOUT

DRAWING NUMBER	REVISION
SK-129	B

SCALE	FORMAT	ADDITIONAL NOTES	DESIGN DEVELOPMENT
1:50	A1		

SIMA MALAK + ALSSAMOURE
DESIGN ASSOCIATES
P.O. Box 15707 - Riyadh 11454 KSA
Tel. 01 441 4963 - Fax. 01 441 3867
simals@simals.com

©SIMA MALAK + ALSSAMOURE DESIGN ASSOCIATES (صمم) 2003
This document including all drawing and text is the property and copyright of SIMA MALAK + ALSSAMOURE DESIGN ASSOCIATES for use solely with respect to this Project and shall not be copied or reproduced by any means except by agreement in writing from SIMA MALAK + ALSSAMOURE DESIGN ASSOCIATES.

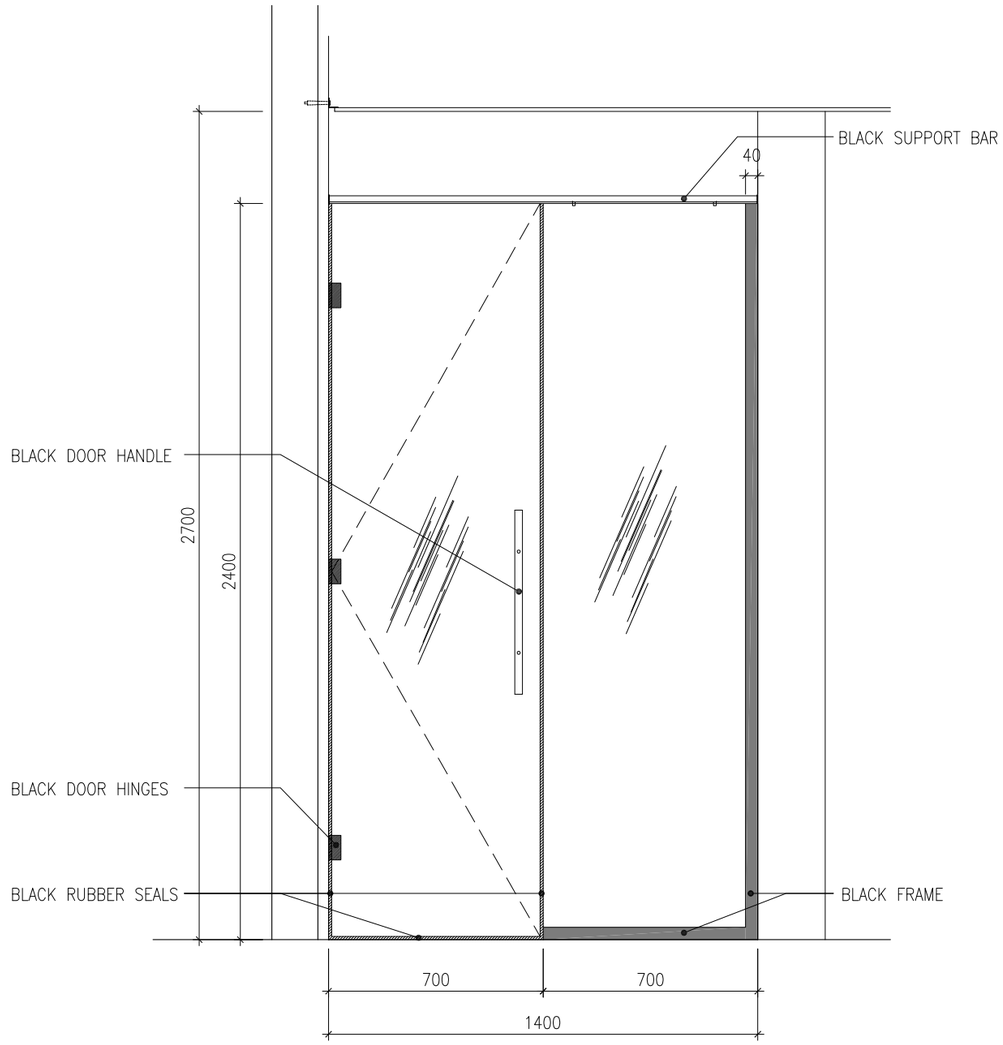

SHOWER DOOR ELEV. OPTION-1

SCALE 1:10

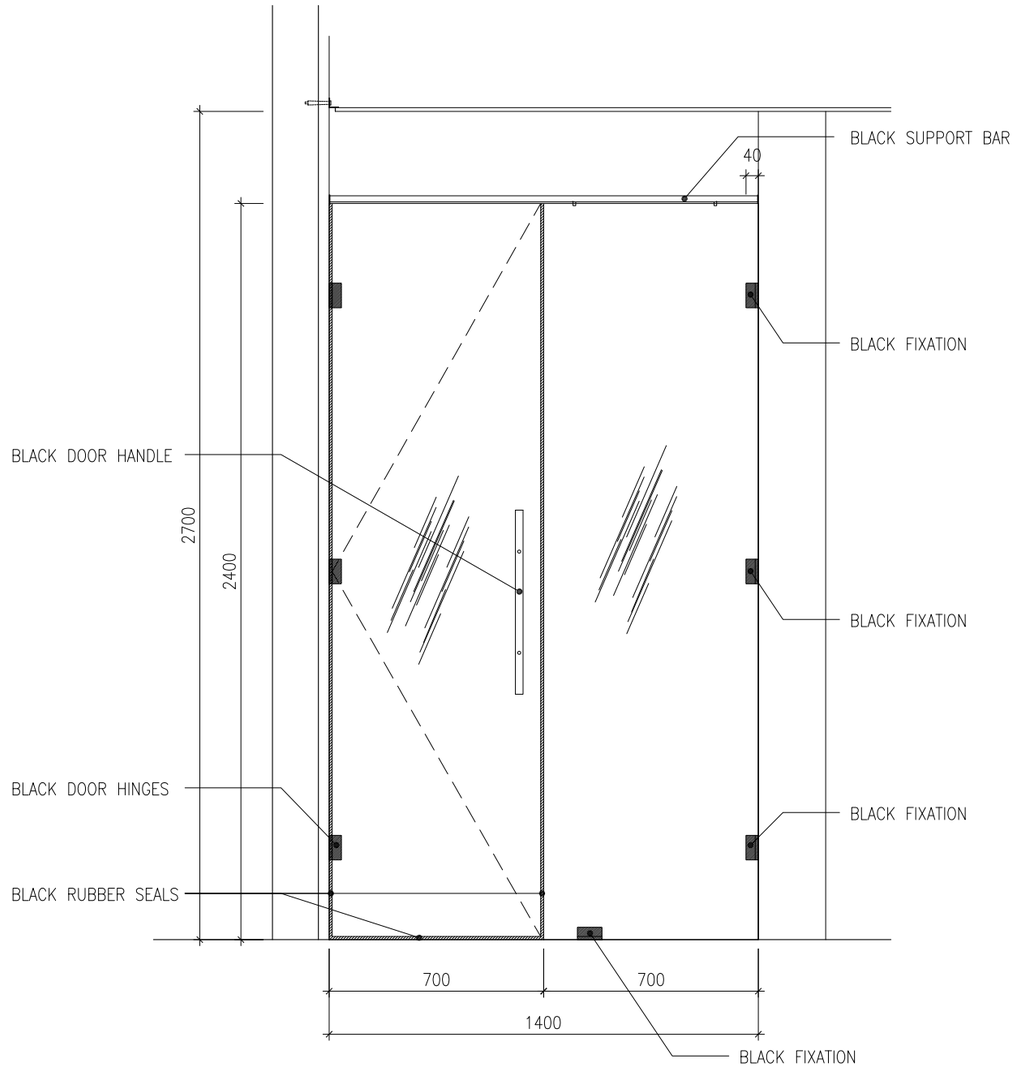

SHOWER DOOR ELEV. OPTION-2

SCALE 1:10

GENERAL NOTES

1. This drawing shall be read in conjuction with all other relevant architectural,structural & electrical drawings including those of other consultants.
2. It is the responsability of contractors & manufacturers to check all relevant site dimensions prior to the start of construction or manufacture.
3. All materials and components must be installed on site in accordance with manufacturer's instructions , shop drawings and standard details.
4. All dimensions are in millemeters unless noted otherwise.
5. Full working drawings, specifications and samples are to be provided by Contractor/Supplier for approval prior to manufacture.

KEY PLAN

REV.#	GENERAL NOTES	DRAWN BY	CHECKED BY	APPROVED BY	DATE
X	INITIAL ISSUE	AC	AM	AM	2025.04.17

PROJECT TITLE	REFERENCE
SAF-RIYADH	SAF01 G

DRAWING TITLE

FIRST FLOOR
BATHROOM (01-06)
SHOWER GLASS + DOOR ELEVATION

DRAWING NUMBER	REVISION
SK-106-2	-

SCALE	FORMAT	ADDITIONAL NOTES	DESIGN DEVELOPMENT
1:10	A1		

SIMA MALAK + ALSSAMOURE
DESIGN ASSOCIATES
P.O. Box 15707 - Riyadh 11454 KSA
Tel. 01 441 4963 - Fax. 01 441 3867
simals@simals.com

©SIMA MALAK + ALSSAMOURE DESIGN ASSOCIATES (سما) 2003
This document including all drawing and text is the property and copyright of SIMA MALAK + ALSSAMOURE DESIGN ASSOCIATES for use solely with respect to this Project and shall not be copied or reproduced by any means except by agreement in writing from SIMA MALAK + ALSSAMOURE DESIGN ASSOCIATES.

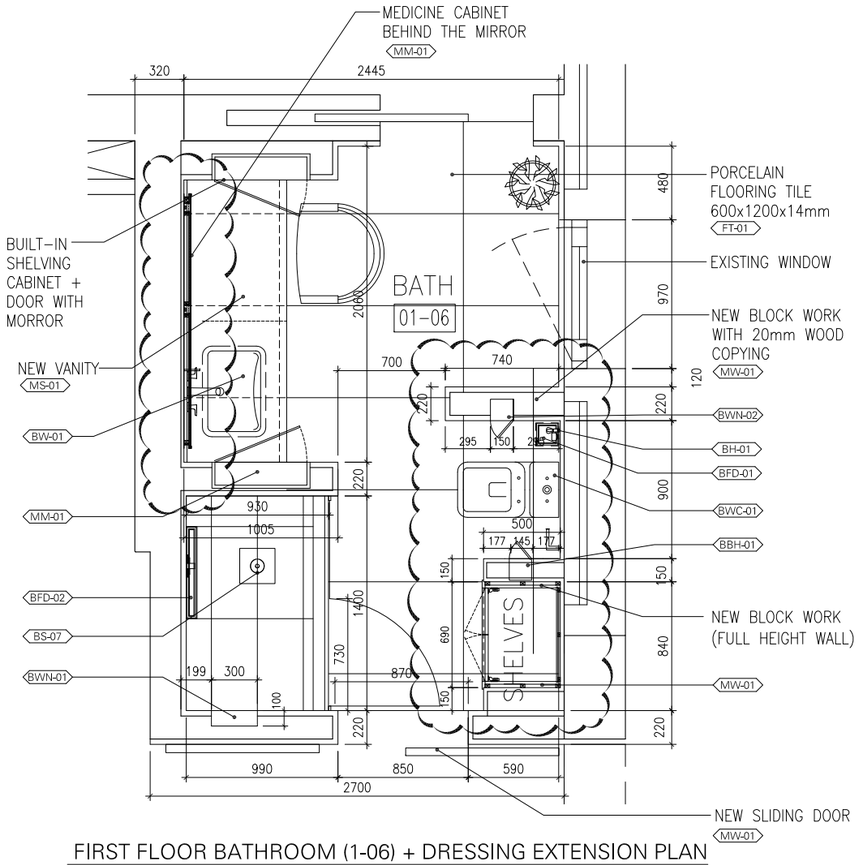

FIRST FLOOR BATHROOM (1-06) + DRESSING EXTENSION PLAN

SCALE 1:25

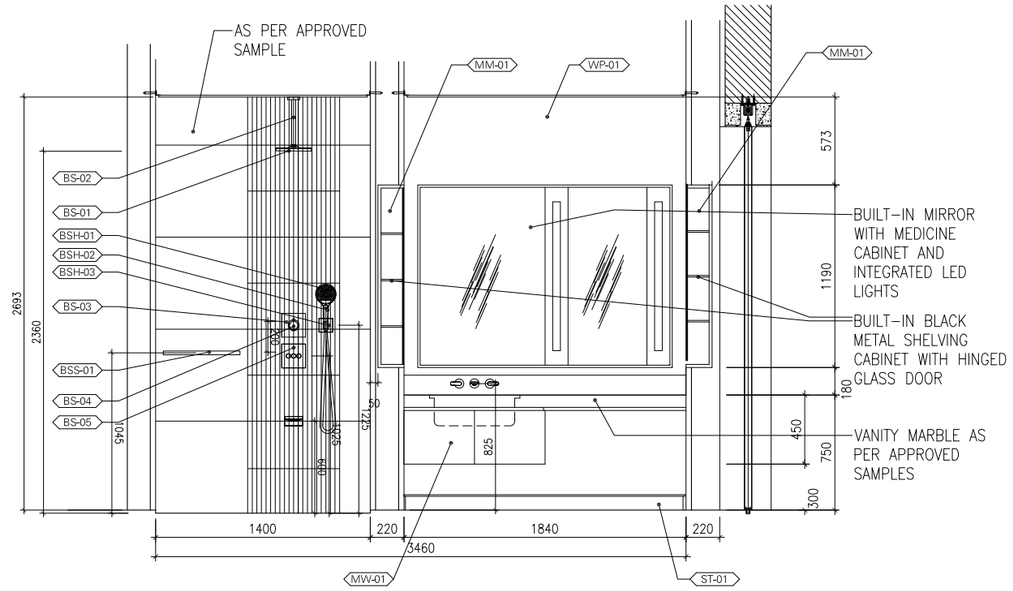

ELEVATION - 01

SCALE 1:25

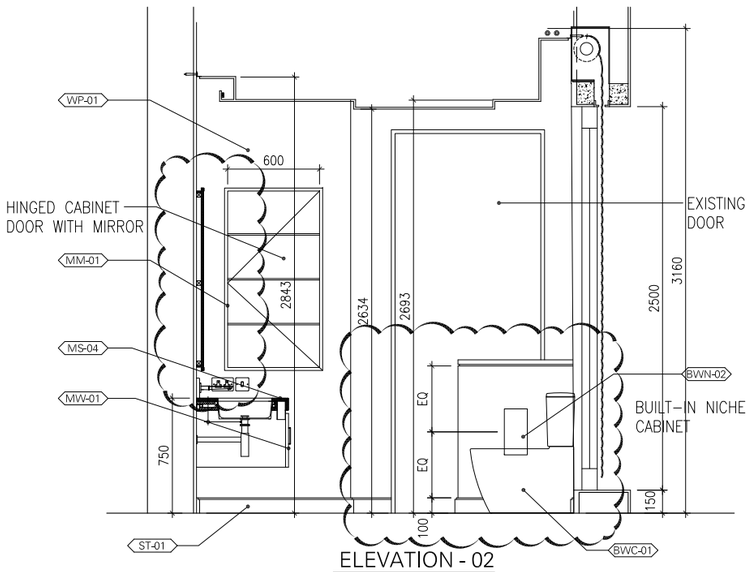

ELEVATION - 02

SCALE 1:25

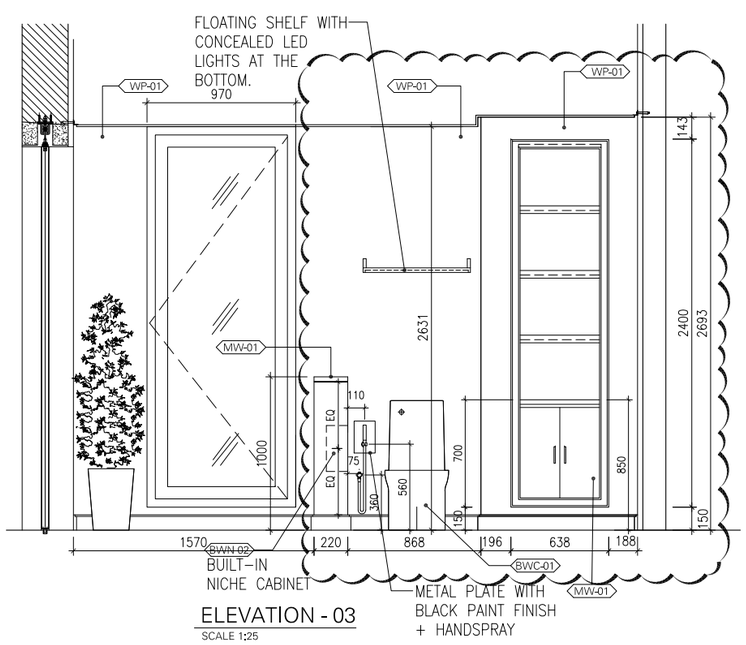

ELEVATION - 03

SCALE 1:25

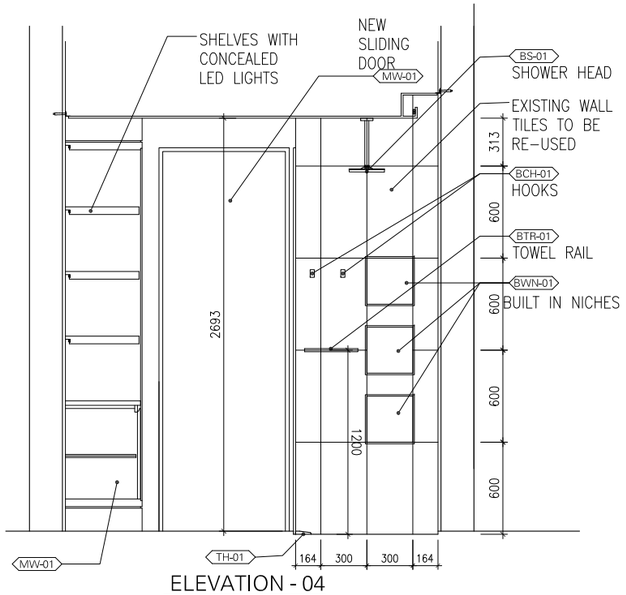

ELEVATION - 04

SCALE 1:25

GENERAL NOTES

1. This drawing shall be read in conjuction with all other relevant architectural,structural & electrical drawings including those of other consultants.
2. It is the responsability of contractors & manufacturers to check all relevant site dimensions prior to the start of construction or manufacture.
3. All materials and components must be installed on site in accordance with manufacturer's instructions , shop drawings and standard details.
4. All dimensions are in millemeters unless noted otherwise.
5. Full working drawings, specifications and samples are to be provided by Contractor/Supplier for approval prior to manufacture.

KEY PLAN

REV.#	GENERAL NOTES	DRAWN BY	CHECKED BY	APPROVED BY	DATE
E	REV. WITH CLOUD	AC	AM	AM	2024.12.12
D	VANITY+MIRROR REV.	AC	AM	AM	2024.12.11
C	REV. SANITARY FUX.	MP	AM	SM	2024.11.04
B	GENERAL REV.	MP	AM	SM	2024.10.13
A	GENERAL REV.	MP	AM	SM	2024.07.02
X	INITIAL ISSUE	AC/MP	AM	AM	2024.05.07

PROJECT TITLE	REFERENCE
SAF-RIYADH	SAF01 G

DRAWING TITLE

FIRST FLOOR BATHROOM (01-06) PROPOSED PLAN + ELEVATIONS

DRAWING NUMBER	REVISION
SK-106	D

SCALE	FORMAT	ADDITIONAL NOTES	DESIGN DEVELOPMENT
1:50	A1		

SIMA MALAK + ALSSAMOURE DESIGN ASSOCIATES

P.O. Box 15707 - Riyadh 11454 KSA
Tel. 01 441 4963 - Fax. 01 441 3867
simals@simals.com

©SIMA MALAK + ALSSAMOURE DESIGN ASSOCIATES (ـــــ) 2003
This document including all drawing and text is the property and copyright of SIMA MALAK + ALSSAMOURE DESIGN ASSOCIATES for use solely with respect to this Project and shall not be copied or reproduced by any means except by agreement in writing from SIMA MALAK + ALSSAMOURE DESIGN ASSOCIATES.

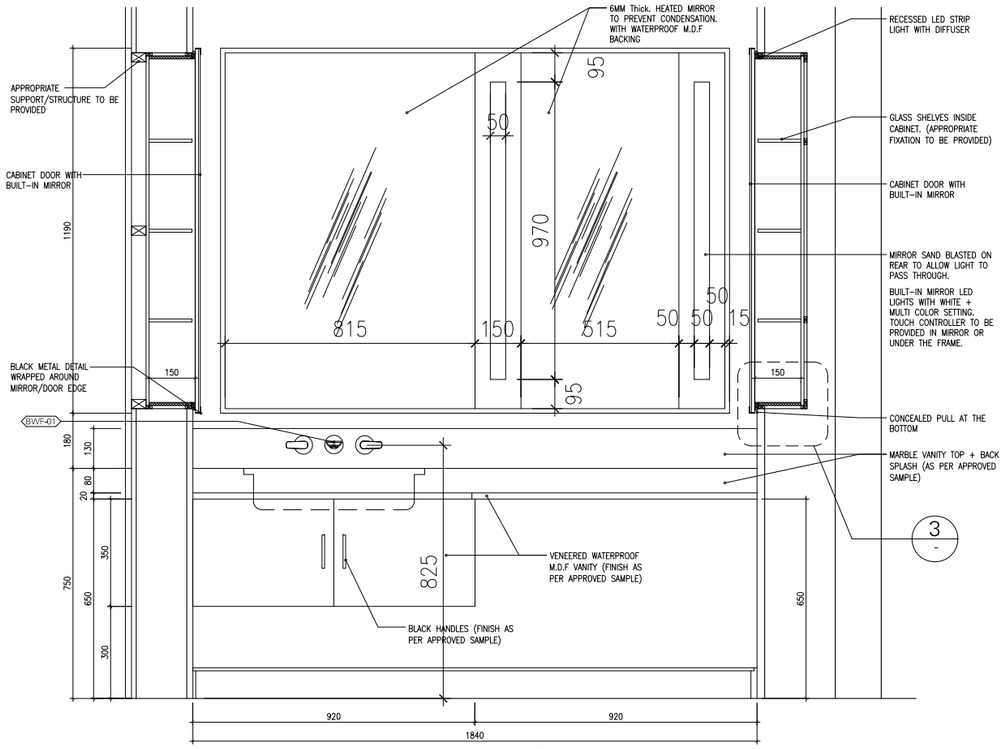

VANITY ELEVATION

SCALE 1:10

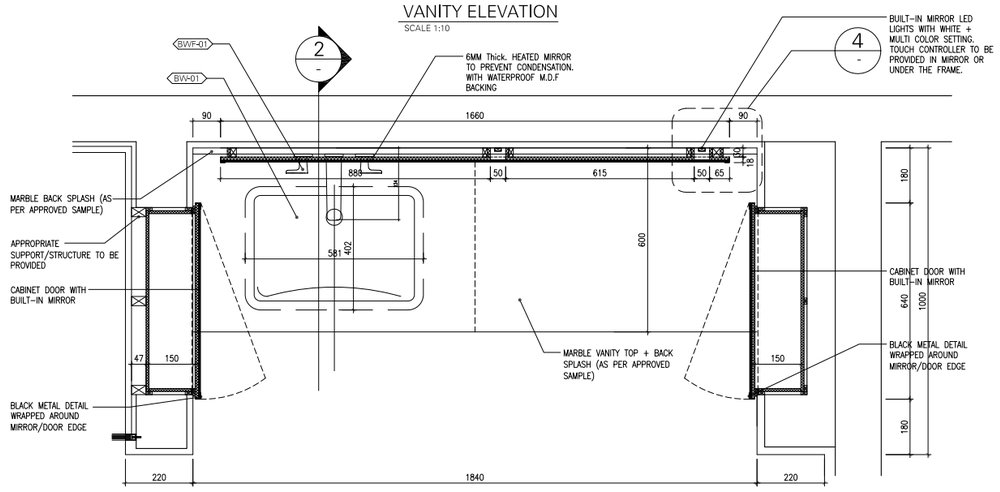

01 VANITY PLAN

Scale 1:10

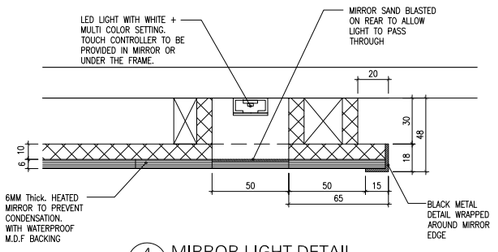

4 MIRROR LIGHT DETAIL

Scale 1:2

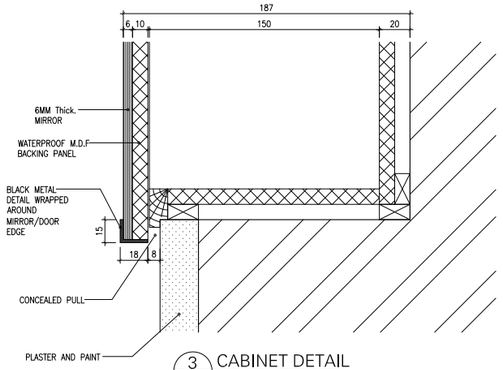

3 CABINET DETAIL

Scale 1:2

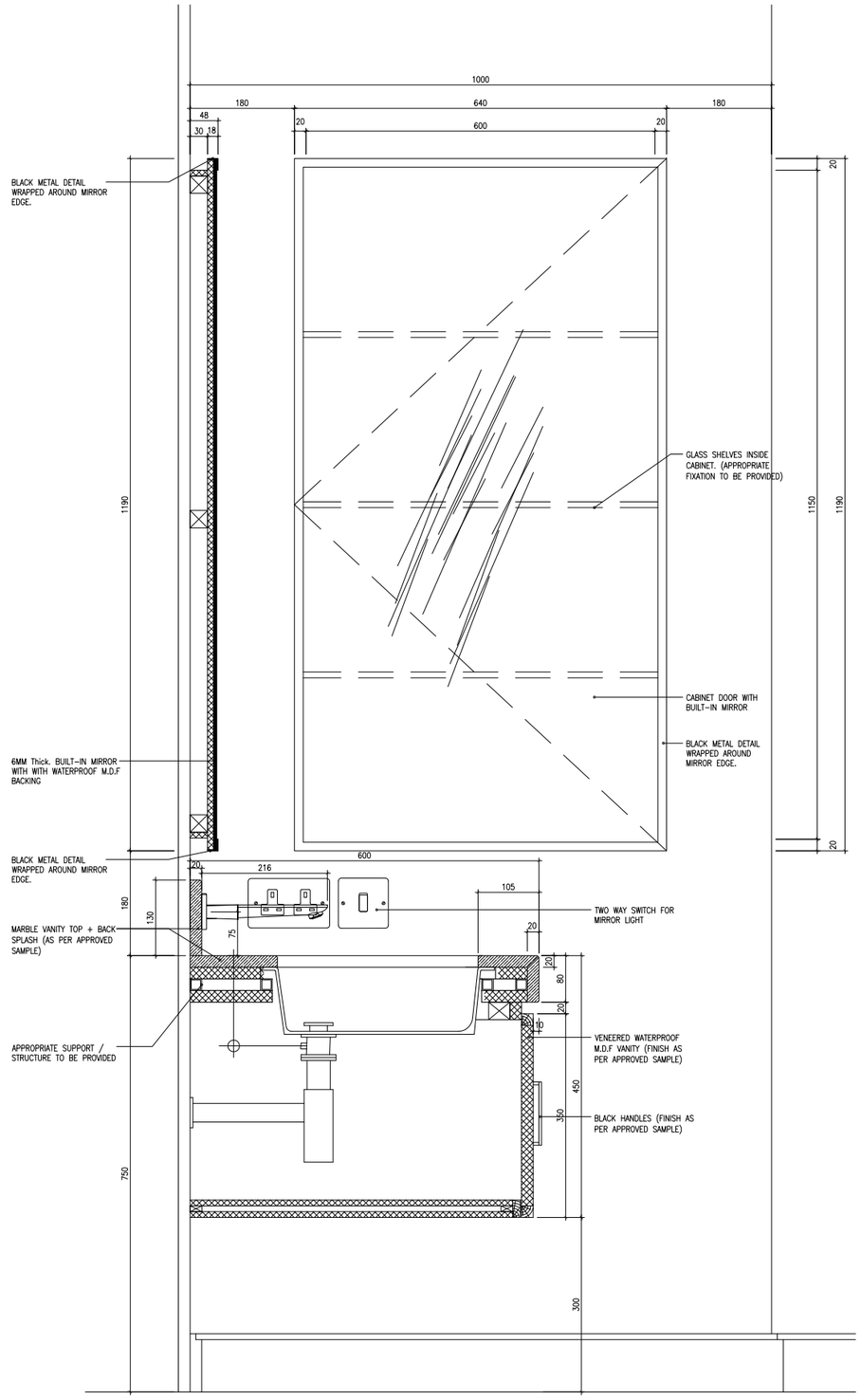

02 VANITY SECTION

Scale 1:5

GENERAL NOTES

1. This drawing shall be read in conjuction with all other relevant architectural,structural & electrical drawings including those of other consultants.
2. It is the responsability of contractors & manufacturers to check all relevant site dimensions prior to the start of construction or manufacture.
3. All materials and components must be installed on site in accordance with manufacturer's instructions , shop drawings and standard details.
4. All dimensions are in millemeters unless noted otherwise.
5. Full working drawings, specifications and samples are to be provided by Contractor/Supplier for approval prior to manufacture.

KEY PLAN

REV.#	GENERAL NOTES	DRAWN BY	CHECKED BY	APPROVED BY	DATE
A	VANITY+MIRROR REV.	AC	AM	AM	2024.12.11
	INITIAL ISSUE	AC/MP	AM	AM	2024.10.01

PROJECT TITLE: SAF-RIYADH — REFERENCE: SAF01 G

DRAWING TITLE: FIRST FLOOR BATHROOM (01-06) VANITY + CABINET DETAILS

DRAWING NUMBER: SK-106-2 — REVISION: S

SCALE	FORMAT	ADDITIONAL NOTES	DESIGN DEVELOPMENT
1:50	A1		

SIMA MALAK + ALSSAMOURE
DESIGN ASSOCIATES
P.O. Box 15707 - Riyadh 11454 KSA
Tel. 01 441 4963 - Fax. 01 441 3867
simals@simals.com

©SIMA MALAK + ALSSAMOURE DESIGN ASSOCIATES (سما) 2003
This document including all drawing and text is the property and copyright of SIMA MALAK + ALSSAMOURE DESIGN ASSOCIATES for use solely with respect to this Project and shall not be copied or reproduced by any means except by agreement in writing from SIMA MALAK + ALSSAMOURE DESIGN ASSOCIATES.

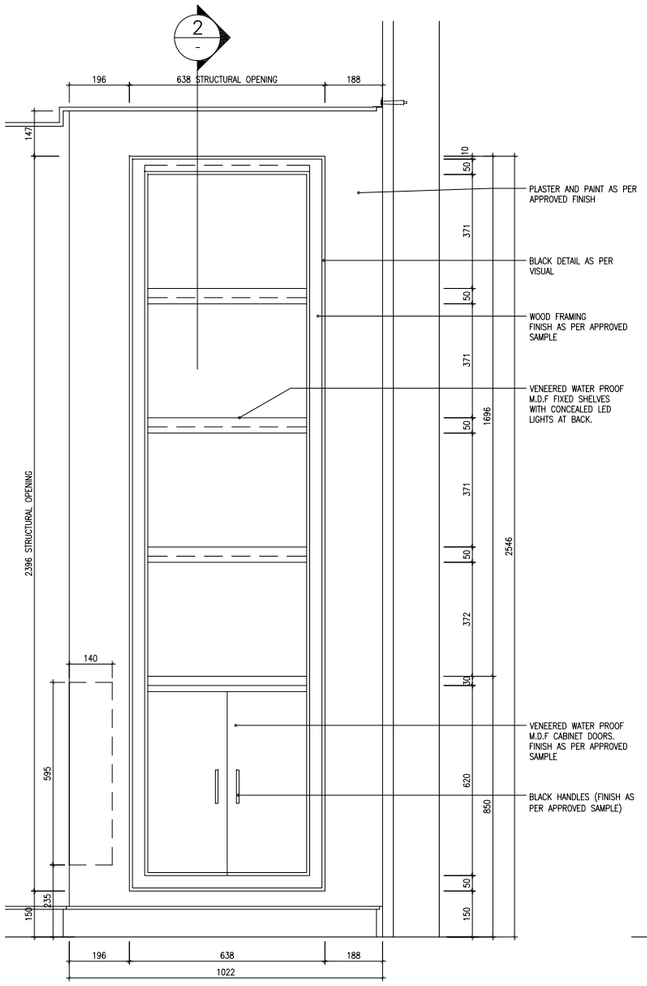

SHELVING + STORAGE UNIT ELEVATION
SCALE 1:10

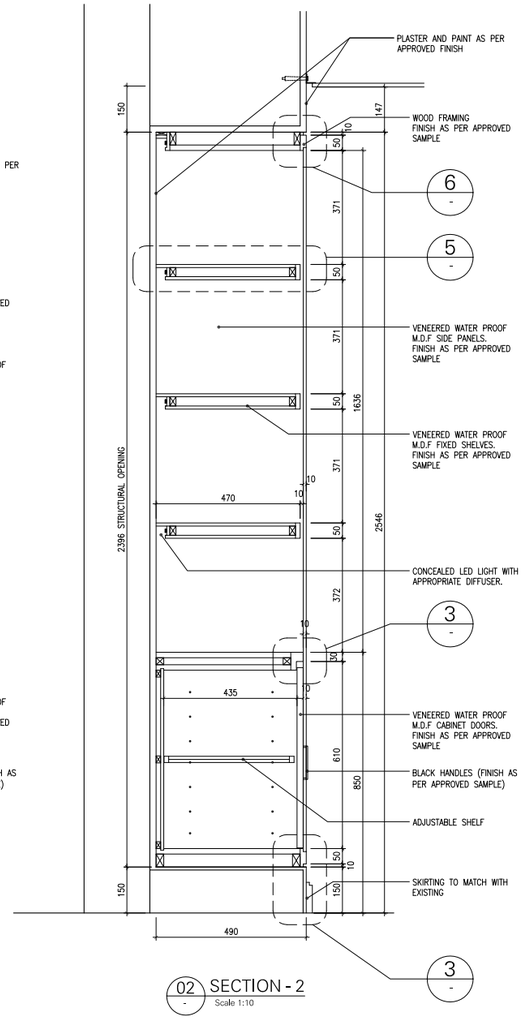

02 SECTION - 2
Scale 1:10

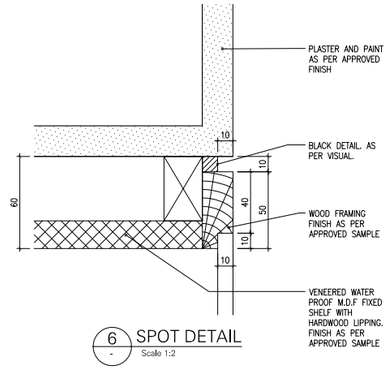

6 SPOT DETAIL
Scale 1:2

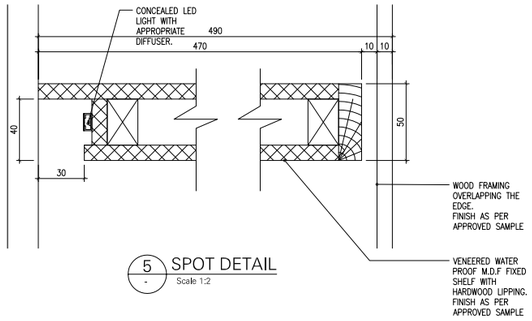

5 SPOT DETAIL
Scale 1:2

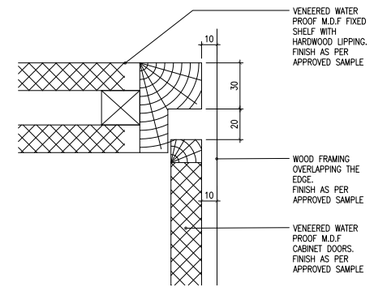

4 SPOT DETAIL
Scale 1:2

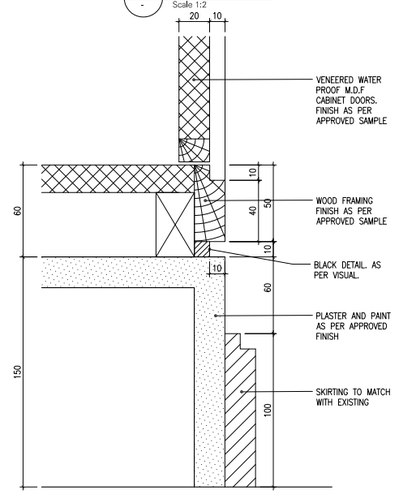

3 SPOT DETAIL
Scale 1:2

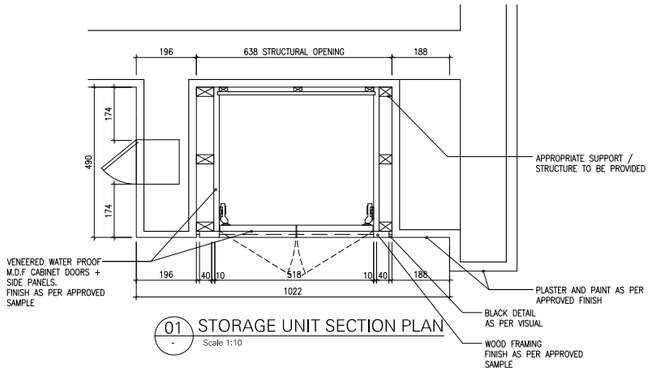

01 STORAGE UNIT SECTION PLAN
Scale 1:10

GENERAL NOTES

1. This drawing shall be read in conjuction with all other relevant architectural,structural & electrical drawings including those of other consultants.
2. It is the responsability of contractors & manufacturers to check all relevant site dimensions prior to the start of construction or manufacture.
3. All materials and components must be installed on site in accordance with manufacturer's instructions , shop drawings and standard details.
4. All dimensions are in millemeters unless noted otherwise.
5. Full working drawings, specifications and samples are to be provided by Contractor/Supplier for approval prior to manufacture.

KEY PLAN

REV.#	GENERAL NOTES	DRAWN BY	CHECKED BY	APPROVED BY	DATE
B	GENERAL REV.	MP	AM	SM	2025.06.24
A	REV. WITH CLOUD	AC	AM	AM	2024.12.12
	INITIAL ISSUE	AC/MP	AM	AM	2024.10.01

PROJECT TITLE: SAF-RIYADH
REFERENCE: SAF01 G

DRAWING TITLE: FIRST FLOOR BATHROOM (01-06) SHELVING + STORAGE UNIT DETAILS

DRAWING NUMBER: SK-106-3
REVISION: A

SCALE	FORMAT	ADDITIONAL NOTES	DESIGN DEVELOPMENT
1:50	A1		

SIMA MALAK + ALSSAMOURE DESIGN ASSOCIATES
P.O. Box 15707 - Riyadh 11454 KSA
Tel. 01 441 4963 - Fax. 01 441 3867
simals@simals.com

©SIMA MALAK + ALSSAMOURE DESIGN ASSOCIATES (سما) 2003
This document including all drawing and text is the property and copyright of SIMA MALAK + ALSSAMOURE DESIGN ASSOCIATES for use solely with respect to this Project and shall not be copied or reproduced by any means except by agreement in writing from SIMA MALAK + ALSSAMOURE DESIGN ASSOCIATES.

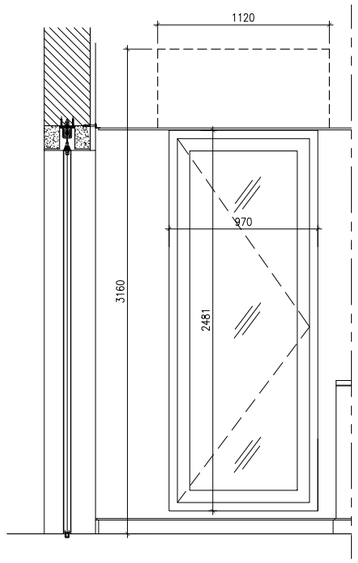

BATHROOM WINDOW ELEVATION

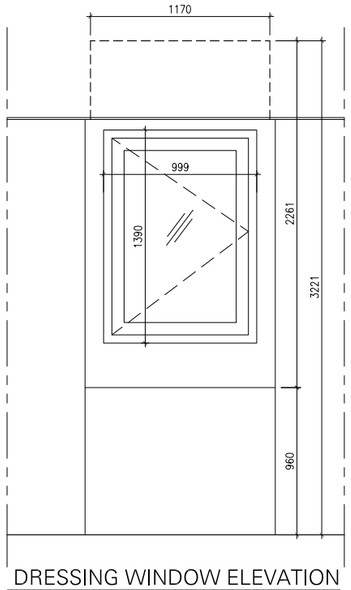

DRESSING WINDOW ELEVATION

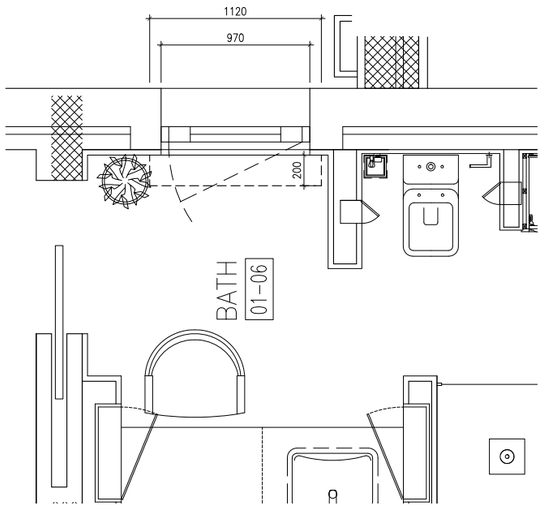

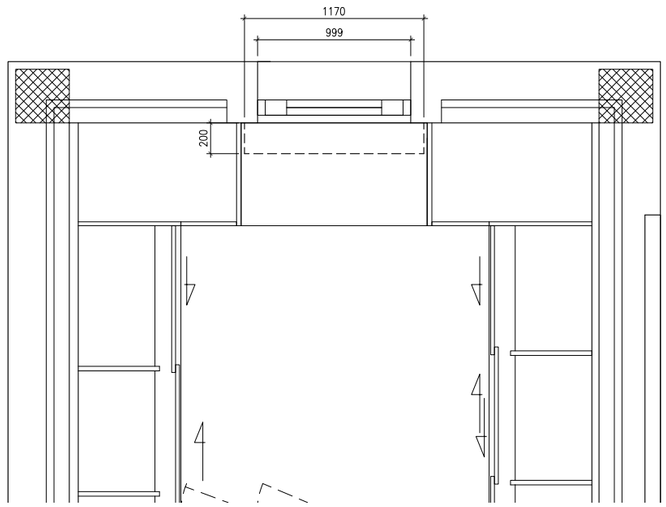

GENERAL NOTES

1. This drawing shall be read in conjuction with all other relevant architectural,structural & electrical drawings including those of other consultants.
2. It is the responsability of contractors & manufacturers to check all relevant site dimensions prior to the start of construction or manufacture.
3. All materials and components must be installed on site in accordance with manufacturer's instructions , shop drawings and standard details.
4. All dimensions are in millemeters unless noted otherwise.
5. Full working drawings, specifications and samples are to be provided by Contractor/Supplier for approval prior to manufacture.

KEY PLAN

REV.#	GENERAL NOTES	DRAWN BY	CHECKED BY	APPROVED BY	DATE
	INITIAL ISSUE	MP	AM	AM	2025.06.22

PROJECT TITLE: SAF-RIYADH

REFERENCE: SAF01 G

DRAWING TITLE: FIRST FLOOR BATHROOM (01-06) + DRESS (01-07A) WINDOWS PLAN AND ELEVATIONS

DRAWING NUMBER: SK-140

REVISION: -

SCALE	FORMAT	ADDITIONAL NOTES	DESIGN DEVELOPMENT
1:20	A1		

SIMA MALAK + ALSSAMOURE
DESIGN ASSOCIATES
P.O. Box 15707 - Riyadh 11454 KSA
Tel. 01 441 4963 - Fax. 01 441 3867
simals@simals.com

©SIMA MALAK + ALSSAMOURE DESIGN ASSOCIATES (سما ملك) 2003
This document including all drawing and text is the property and copyright of SIMA MALAK + ALSSAMOURE DESIGN ASSOCIATES for use solely with respect to this Project and shall not be copied or reproduced by any means except by agreement in writing from SIMA MALAK + ALSSAMOURE DESIGN ASSOCIATES.

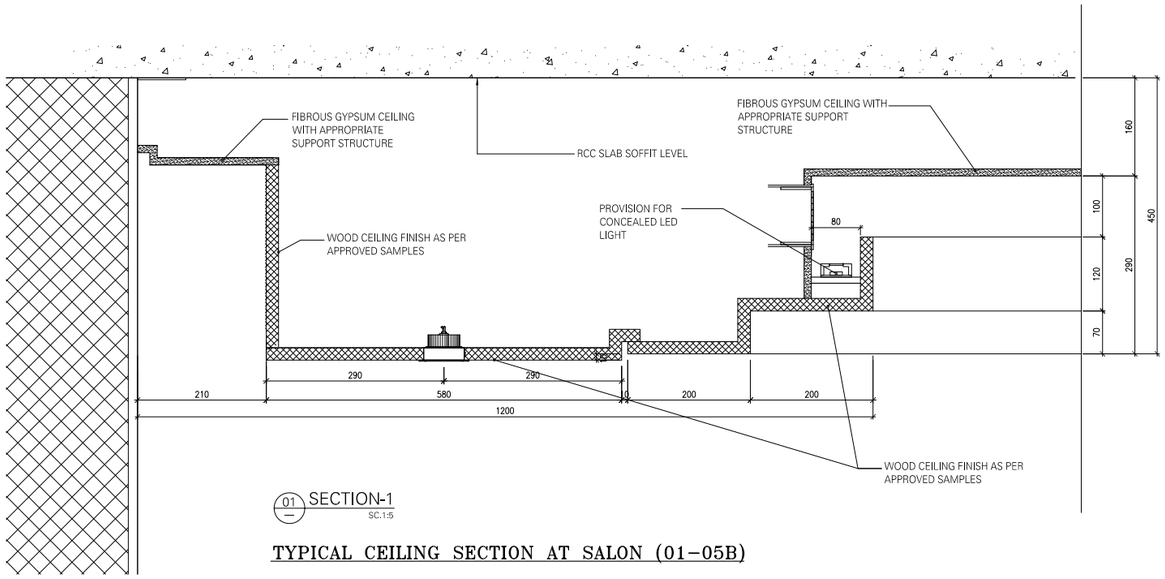

01 SECTION-1
SC.1:5

TYPICAL CEILING SECTION AT SALON (01-05B)

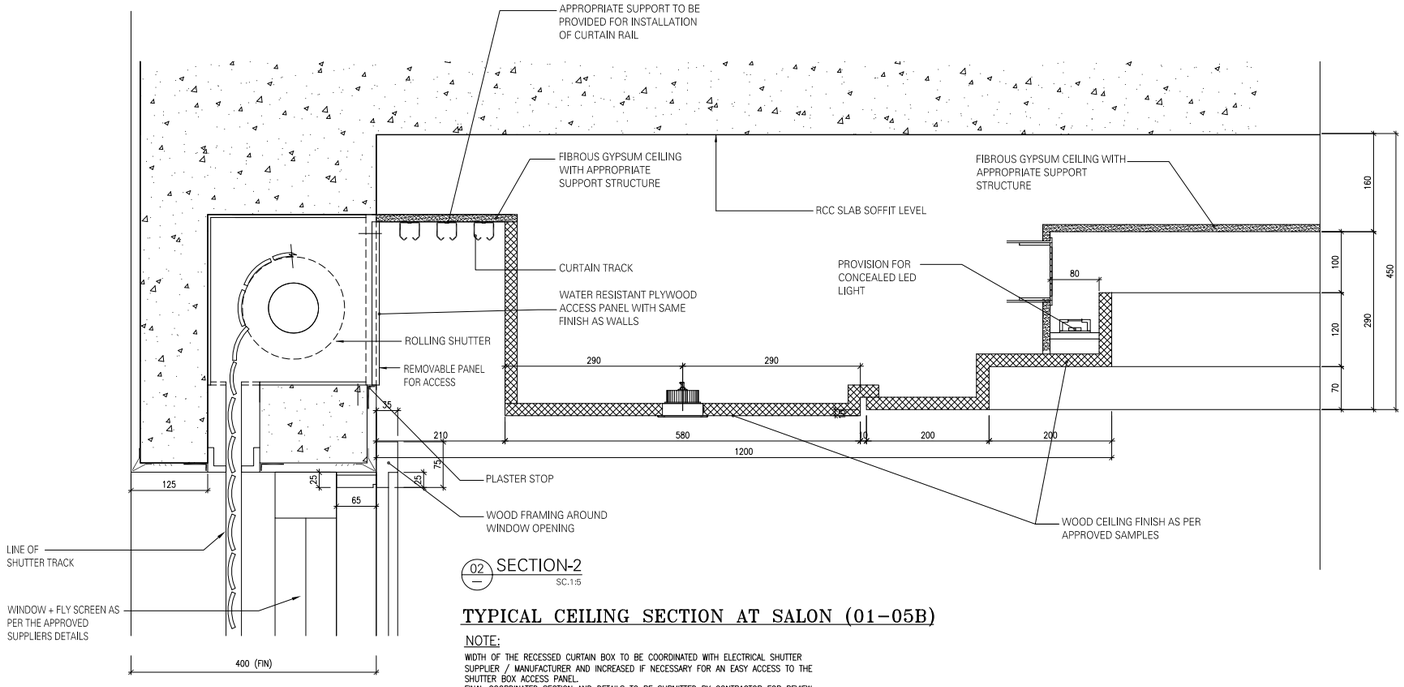

02 SECTION-2
SC.1:5

TYPICAL CEILING SECTION AT SALON (01-05B)

NOTE:

WIDTH OF THE RECESSED CURTAIN BOX TO BE COORDINATED WITH ELECTRICAL SHUTTER SUPPLIER / MANUFACTURER AND INCREASED IF NECESSARY FOR AN EASY ACCESS TO THE SHUTTER BOX ACCESS PANEL.
FINAL COORDINATED SECTION AND DETAILS TO BE SUBMITTED BY CONTRACTOR FOR REVIEW / APPROVAL.

GENERAL NOTES

1. This drawing shall be read in conjuction with all other relevant architectural,structural & electrical drawings including those of other consultants.
2. It is the responsability of contractors & manufacturers to check all relevant site dimensions prior to the start of construction or manufacture.
3. All materials and components must be installed on site in accordance with manufacturer's instructions , shop drawings and standard details.
4. All dimensions are in millemeters unless noted otherwise.
5. Full working drawings, specifications and samples are to be provided by Contractor/Supplier for approval prior to manufacture.

KEY PLAN

REV.#	GENERAL NOTES	DRAWN BY	CHECKED BY	APPROVED BY	DATE
A	DETS REV.	AC	AM	SM	2025.04.29
	INITIAL ISSUE	AC	AM	AM	2024.05.09

PROJECT TITLE: SAF-RIYADH
REFERENCE: SAF01 G

DRAWING TITLE: FIRST FLOOR SALON (01-05B) CEILING DETAILS

DRAWING NUMBER: SK-141
REVISION: A

SCALE	FORMAT	ADDITIONAL NOTES	DESIGN DEVELOPMENT
1:5	A1		

SIMA MALAK + ALSSAMOURE
DESIGN ASSOCIATES
P.O. Box 15707 - Riyadh 11454 KSA
Tel. 01 441 4963 - Fax. 01 441 3867
simals@simals.com

©SIMA MALAK + ALSSAMOURE DESIGN ASSOCIATES (سما) 2003
This document including all drawing and text is the property and copyright of SIMA MALAK + ALSSAMOURE DESIGN ASSOCIATES for use solely with respect to this Project and shall not be copied or reproduced by any means except by agreement in writing from SIMA MALAK + ALSSAMOURE DESIGN ASSOCIATES.

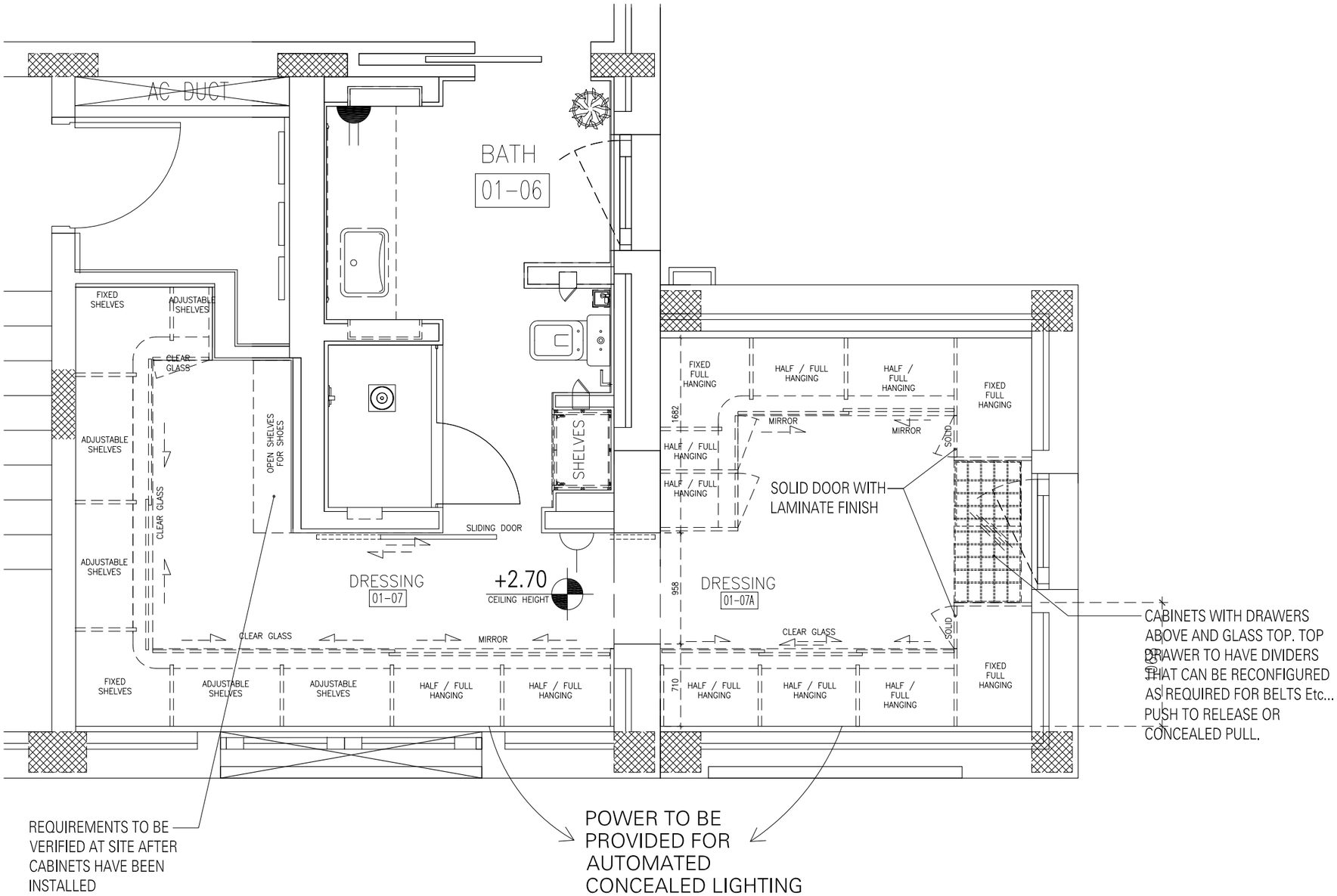

POWER + COMMUNICATION LAYOUT

SCALE 1:20

GENERAL NOTES

1. This drawing shall be read in conjuction with all other relevant architectural,structural & electrical drawings including those of other consultants.
2. It is the responsability of contractors & manufacturers to check all relevant site dimensions prior to the start of construction or manufacture.
3. All materials and components must be installed on site in accordance with manufacturer's instructions , shop drawings and standard details.
4. All dimensions are in millemeters unless noted otherwise.
5. Full working drawings, specifications and samples are to be provided by Contractor/Supplier for approval prior to manufacture.

LEGEND :

- Wall socket power single
- Wall socket power double
- Above counter Wall socket power double
- Wall socket telephone

NOTE:
-All External sockets to be waterproof. Contractor to submit samples for Review/Approval.
-Appropriate provisions to be provided for security system, It system etc... Requirements and specifications to be provided by specialist consultants.

TYPICAL SOCKET POSITIONS :

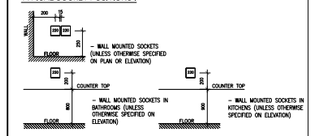

KEY PLAN

REV.#	GENERAL NOTES	DRAWN BY	CHECKED BY	APPROVED BY	DATE
A	PLAN REV.	AC	AM	SM	2025.04.22
	INITIAL ISSUE	AC	AM	AM	2024.05.22

PROJECT TITLE	REFERENCE
SAF-RIYADH	SAF01
	G

DRAWING TITLE

FIRST FLOOR DRESSING + BATH
POWER + COMMUNICATION LAYOUT

DRAWING NUMBER	REVISION
SK-131	A

SCALE	FORMAT	ADDITIONAL NOTES	DESIGN DEVELOPMENT
1:25	A1		

SIMA MALAK + ALSSAMOURE
DESIGN ASSOCIATES
P.O. Box 15707 - Riyadh 11454 KSA
Tel. 01 441 4963 - Fax. 01 441 3867
simals@simals.com

©SIMA MALAK + ALSSAMOURE DESIGN ASSOCIATES (سما) 2003
This document including all drawing and text is the property and copyright of SIMA MALAK + ALSSAMOURE DESIGN ASSOCIATES for use solely with respect to this Project and shall not be copied or reproduced by any means except by agreement in writing from SIMA MALAK + ALSSAMOURE DESIGN ASSOCIATES.

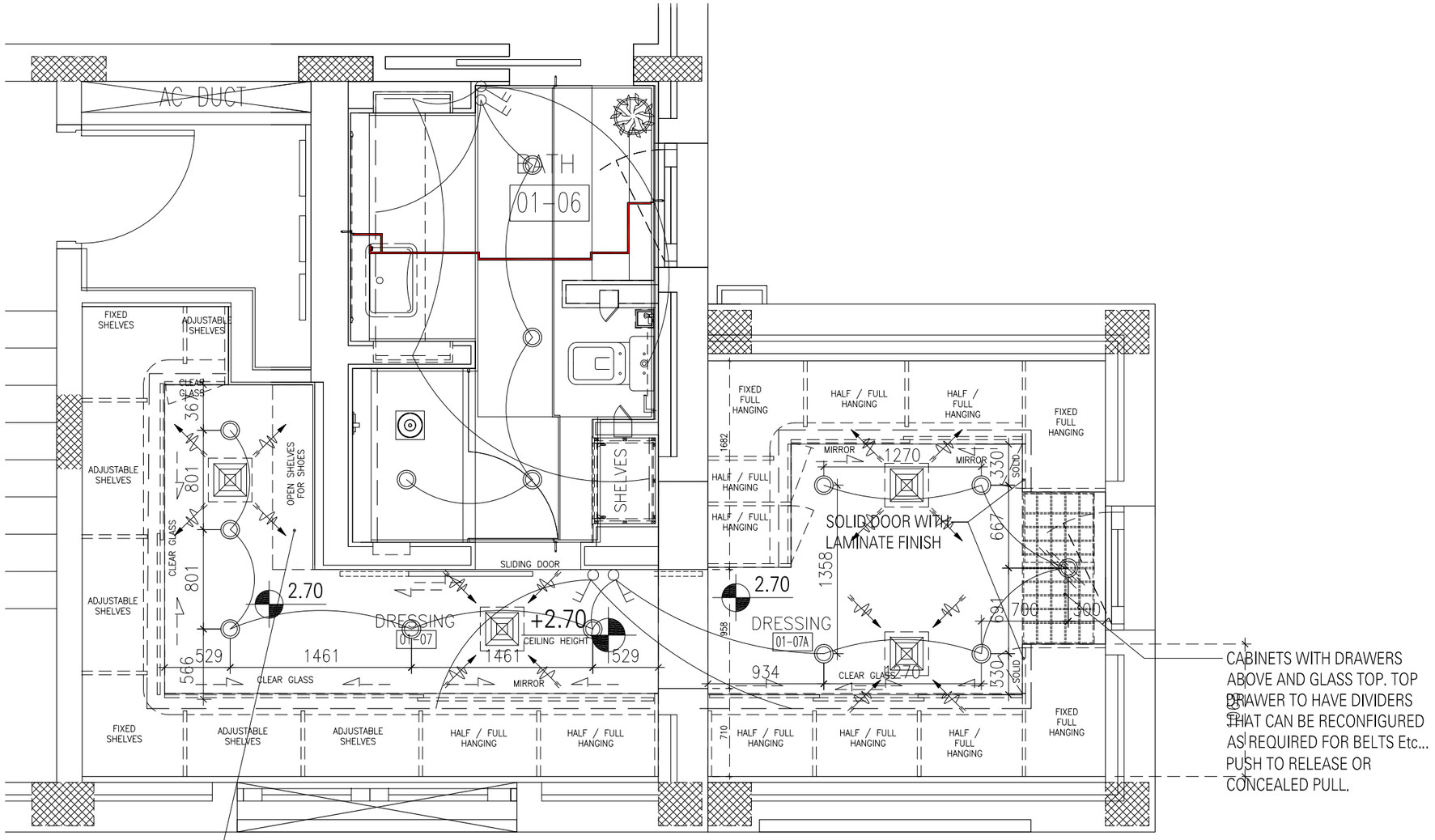

REQUIREMENTS TO BE VERIFIED AT SITE AFTER CABINETS HAVE BEEN INSTALLED

LIGHTING LAYOUT

SCALE 1:20

GENERAL NOTES

1. This drawing shall be read in conjuction with all other relevant architectural,structural & electrical drawings including those of other consultants.
2. It is the responsability of contractors & manufacturers to check all relevant site dimensions prior to the start of construction or manufacture.
3. All materials and components must be installed on site in accordance with manufacturer's instructions , shop drawings and standard details.
4. All dimensions are in millemeters unless noted otherwise.
5. Full working drawings, specifications and samples are to be provided by Contractor/Supplier for approval prior to manufacture.

LEGEND :

- Chandelier
- Recessed Downlight
- 3 Gang Switch

TYPICAL LAYOUT OF SWITCHES

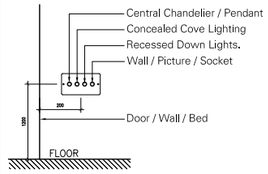

KEY PLAN

REV.#	GENERAL NOTES	DRAWN BY	CHECKED BY	APPROVED BY	DATE
B	GEN. REV.	AC	AM	SM	2025.04.22
A	GENERAL REV.	MP	AM	SM	2024.07.03
	INITIAL ISSUE	AC	AM	AM	2024.05.22

PROJECT TITLE	REFERENCE
SAF-RIYADH	SAF01 G

DRAWING TITLE: FIRST FLOOR DRESSING + BATH LIGHTING LAYOUT

DRAWING NUMBER	REVISION
SK-132	B

SCALE	FORMAT	ADDITIONAL NOTES	DESIGN DEVELOPMENT
1:25	A1		

SIMA MALAK + ALSSAMOURE
DESIGN ASSOCIATES
P.O. Box 15707 - Riyadh 11454 KSA
Tel. 01 441 4963 - Fax. 01 441 3867
simals@simals.com

©SIMA MALAK + ALSSAMOURE DESIGN ASSOCIATES (سما) 2003
This document including all drawing and text is the property and copyright of SIMA MALAK + ALSSAMOURE DESIGN ASSOCIATES for use solely with respect to this Project and shall not be copied or reproduced by any means except by agreement in writing from SIMA MALAK + ALSSAMOURE DESIGN ASSOCIATES.

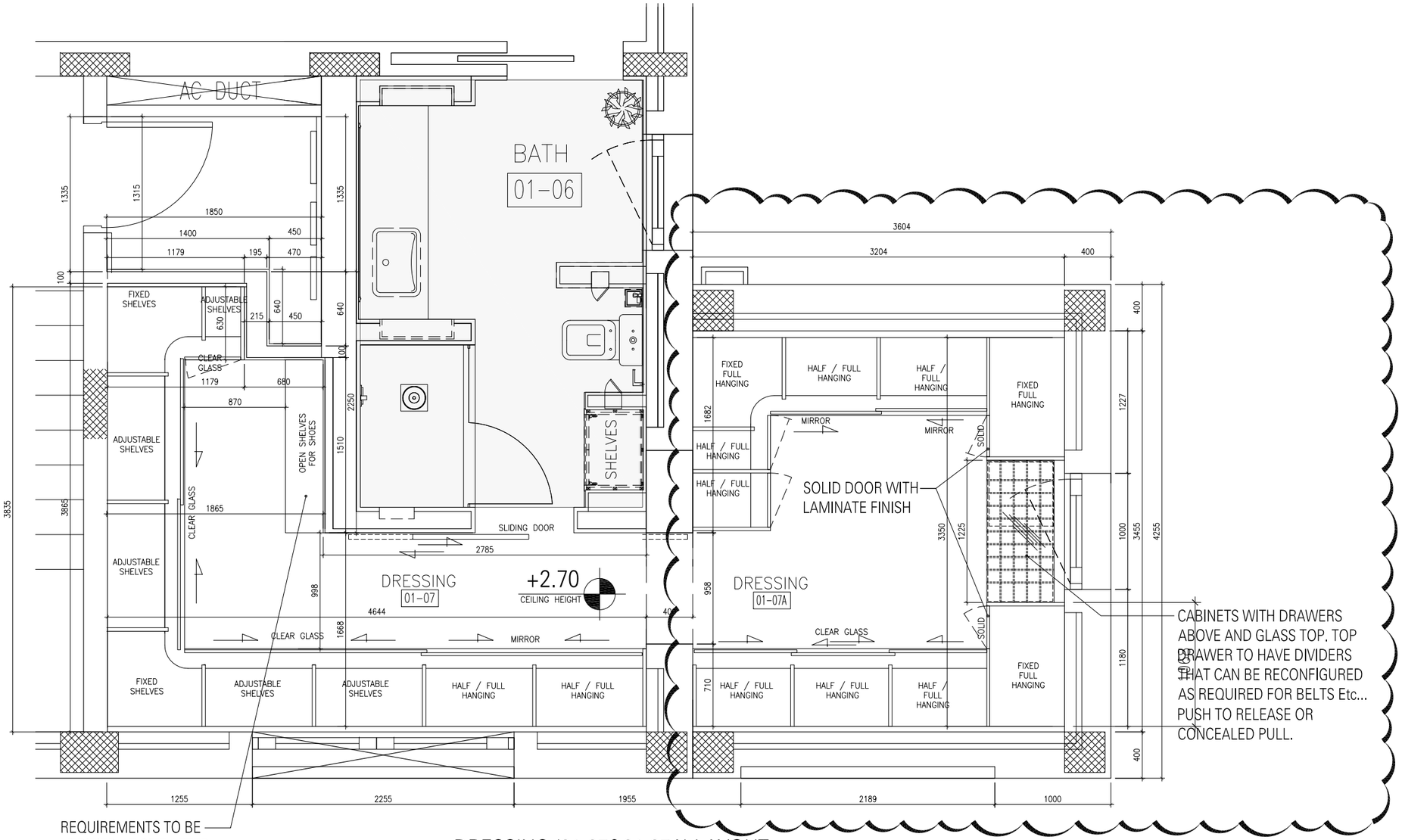

DRESSING (01-07&01-07A) LAYOUT

SCALE 1:20

NOTE:
GLASS TO BE SLIGHTLY TINTED

GENERAL NOTES

1. This drawing shall be read in conjuction with all other relevant architectural,structural & electrical drawings including those of other consultants.
2. It is the responsability of contractors & manufacturers to check all relevant site dimensions prior to the start of construction or manufacture.
3. All materials and components must be installed on site in accordance with manufacturer's instructions , shop drawings and standard details.
4. All dimensions are in millemeters unless noted otherwise.
5. Full working drawings, specifications and samples are to be provided by Contractor/Supplier for approval prior to manufacture.

KEY PLAN

REV.#	GENERAL NOTES	DRAWN BY	CHECKED BY	APPROVED BY	DATE
G	REV. WITH CLOUD	AC	AM	SM	2025.05.05
F	REV. AS PER SITE	AC	AM	SM	2025.03.20
E	GENERAL REV.	AC	AM	SM	2024.10.09
D	GENERAL REV.	MP	AM	SM	2024.10.13
C	GENERAL REV.	MP	AM	SM	2024.06.20
B	GENERAL REV.	MP	AM	SM	2024.06.13
A	GENERAL REV.	MP	AM	SM	2024.06.11
	INITIAL ISSUE	AC	AM	AM	2024.05.21

PROJECT TITLE	REFERENCE
SAF-RIYADH	SAF01
	G

DRAWING TITLE

FIRST FLOOR
DRESSING (01-07) LAYOUT - OP 01

DRAWING NUMBER	REVISION
SK-121	G

SCALE	FORMAT	ADDITIONAL NOTES	DESIGN DEVELOPMENT
1:20	A1		

SIMA MALAK + ALSSAMOURE
DESIGN ASSOCIATES
P.O. Box 15707 - Riyadh 11454 KSA
Tel. 01 441 4963 - Fax. 01 441 3867
simals@simals.com

©SIMA MALAK + ALSSAMOURE DESIGN ASSOCIATES (سما) 2003
This document including all drawing and text is the property and copyright of SIMA MALAK + ALSSAMOURE DESIGN ASSOCIATES for use solely with respect to this Project and shall not be copied or reproduced by any means except by agreement in writing from SIMA MALAK + ALSSAMOURE DESIGN ASSOCIATES.

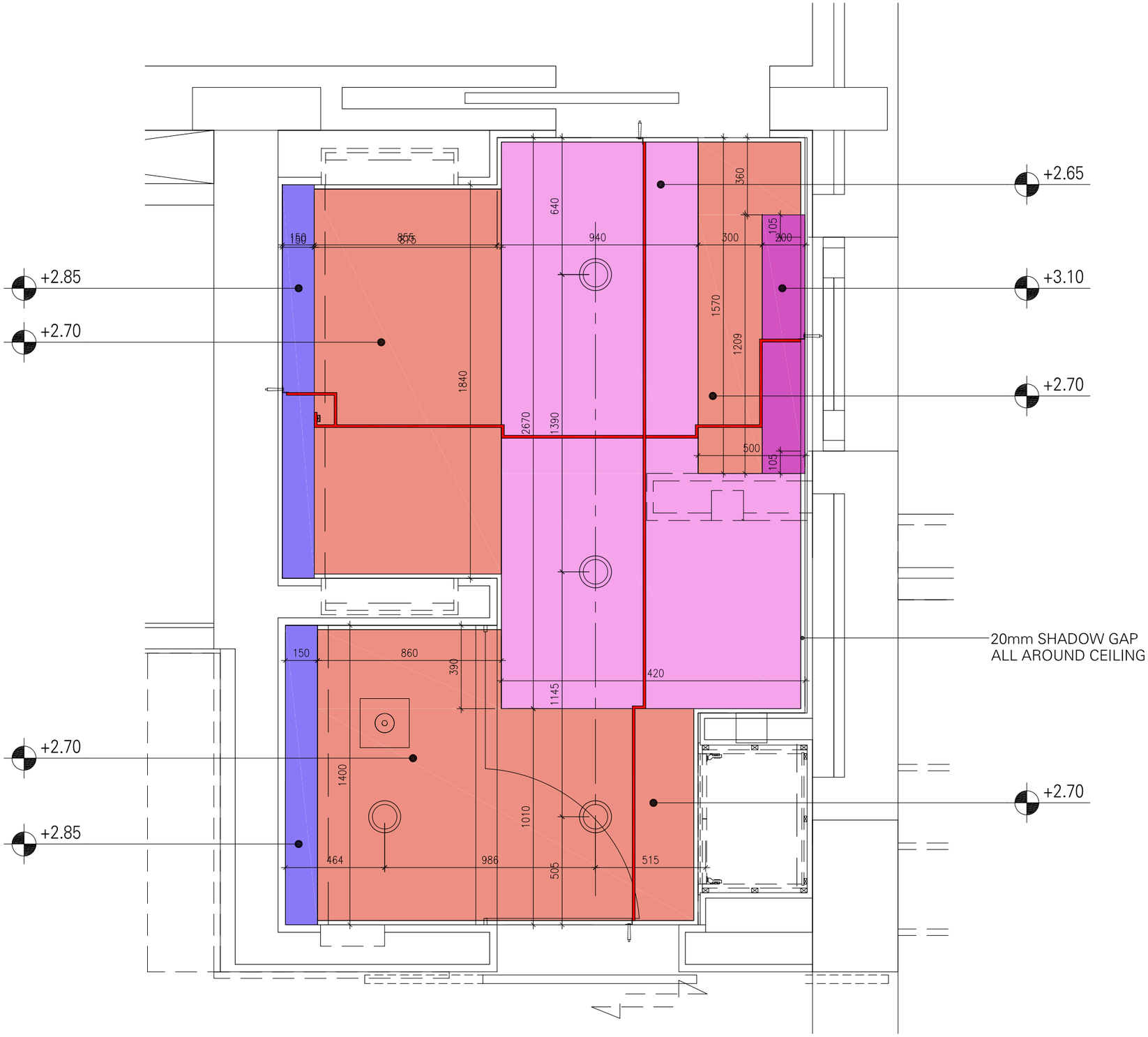

BATH (01-06) CEILING LAYOUT

SCALE 1:10

GENERAL NOTES

1. This drawing shall be read in conjuction with all other relevant architectural,structural & electrical drawings including those of other consultants.
2. It is the responsability of contractors & manufacturers to check all relevant site dimensions prior to the start of construction or manufacture.
3. All materials and components must be installed on site in accordance with manufacturer's instructions , shop drawings and standard details.
4. All dimensions are in millemeters unless noted otherwise.
5. Full working drawings, specifications and samples are to be provided by Contractor/Supplier for approval prior to manufacture.

LEGEND :

Chandelier

Recessed Downlight

KEY PLAN

REV.#	GENERAL NOTES	DRAWN BY	CHECKED BY	APPROVED BY	DATE
	INITIAL ISSUE	AC	AM	AM	2025.04.08

PROJECT TITLE: SAF-RIYADH

REFERENCE: SAF01 G

DRAWING TITLE: FIRST FLOOR BATH (01-06) CEILING LAYOUT

DRAWING NUMBER: SK-140

REVISION:

SCALE	FORMAT	ADDITIONAL NOTES	DESIGN DEVELOPMENT
1:10	A1		

SIMA MALAK + ALSSAMOURE
DESIGN ASSOCIATES
P.O. Box 15707 - Riyadh 11454 KSA
Tel. 01 441 4963 - Fax. 01 441 3867
simals@simals.com

©SIMA MALAK + ALSSAMOURE DESIGN ASSOCIATES (ـــــــ) 2003
This document including all drawing and text is the property and copyright of SIMA MALAK + ALSSAMOURE DESIGN ASSOCIATES for use solely with respect to this Project and shall not be copied or reproduced by any means except by agreement in writing from SIMA MALAK + ALSSAMOURE DESIGN ASSOCIATES.

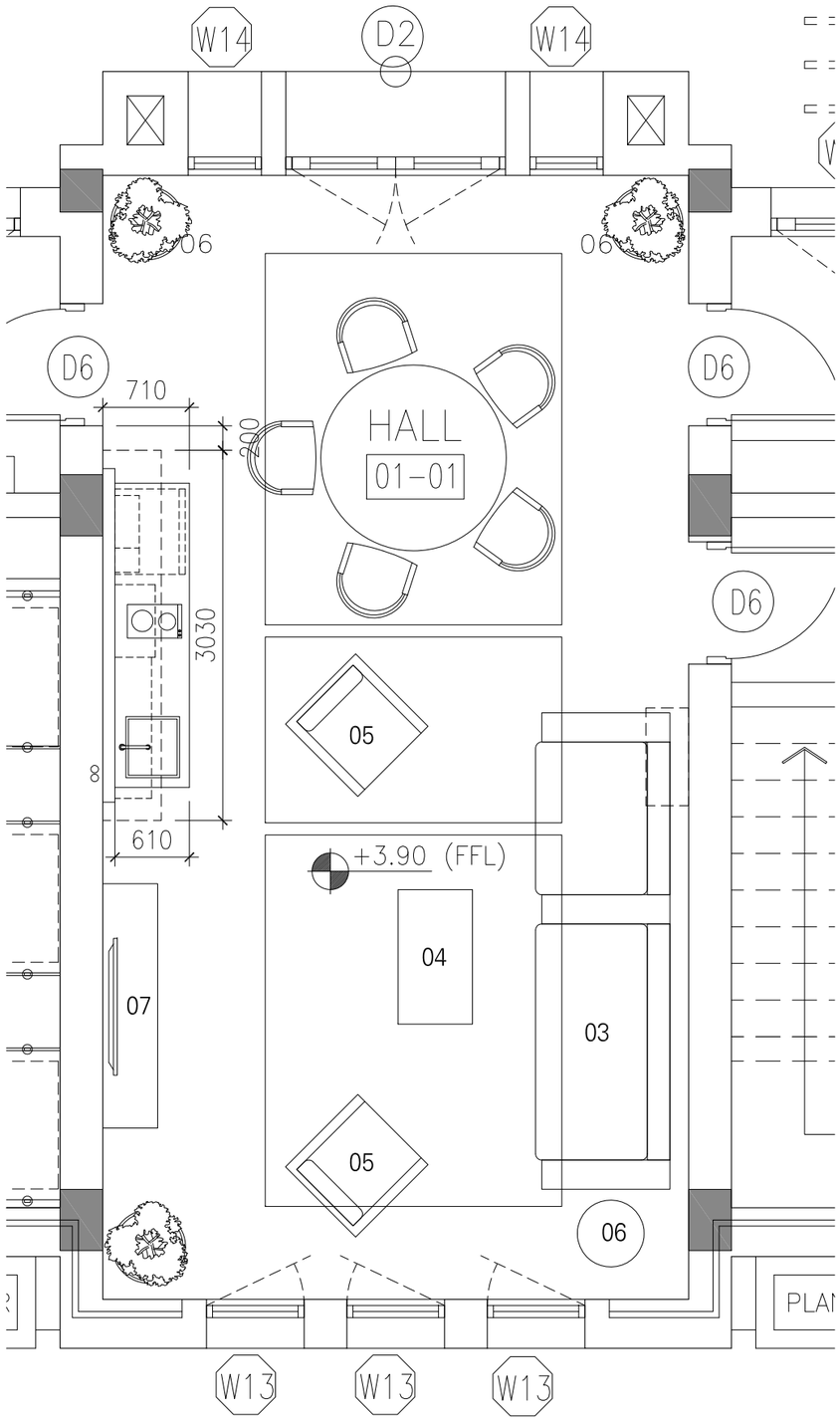

GENERAL NOTES

1. This drawing shall be read in conjuction with all other relevant architectural,structural & electrical drawings including those of other consultants.
2. It is the responsability of contractors & manufacturers to check all relevant site dimensions prior to the start of construction or manufacture.
3. All materials and components must be installed on site in accordance with manufacturer's instructions , shop drawings and standard details.
4. All dimensions are in millemeters unless noted otherwise.
5. Full working drawings, specifications and samples are to be provided by Contractor/Supplier for approval prior to manufacture.

KEY PLAN

REV.#	GENERAL NOTES	DRAWN BY	CHECKED BY	APPROVED BY	DATE
	INITIAL ISSUE	AC/MP	AM	AM	2024.06.10

PROJECT TITLE	REFERENCE
SAF-RIYADH	SAF01 G

DRAWING TITLE

PROPOSED FIRST FLOOR
HALL (01-01) KITCHENETTE
LAYOUT

DRAWING NUMBER	REVISION
SK-133	-

SCALE	FORMAT	ADDITIONAL NOTES	DESIGN DEVELOPMENT
1:25	A1		

SIMA MALAK + ALSSAMOURE
DESIGN ASSOCIATES
P.O. Box 15707 - Riyadh 11454 KSA
Tel. 01 441 4963 - Fax. 01 441 3867
simals@simals.com

©SIMA MALAK + ALSSAMOURE DESIGN ASSOCIATES (سما) 2003
This document including all drawing and text is the property and copyright of SIMA MALAK + ALSSAMOURE DESIGN ASSOCIATES for use solely with respect to this Project and shall not be copied or reproduced by any means except by agreement in writing from SIMA MALAK + ALSSAMOURE DESIGN ASSOCIATES.

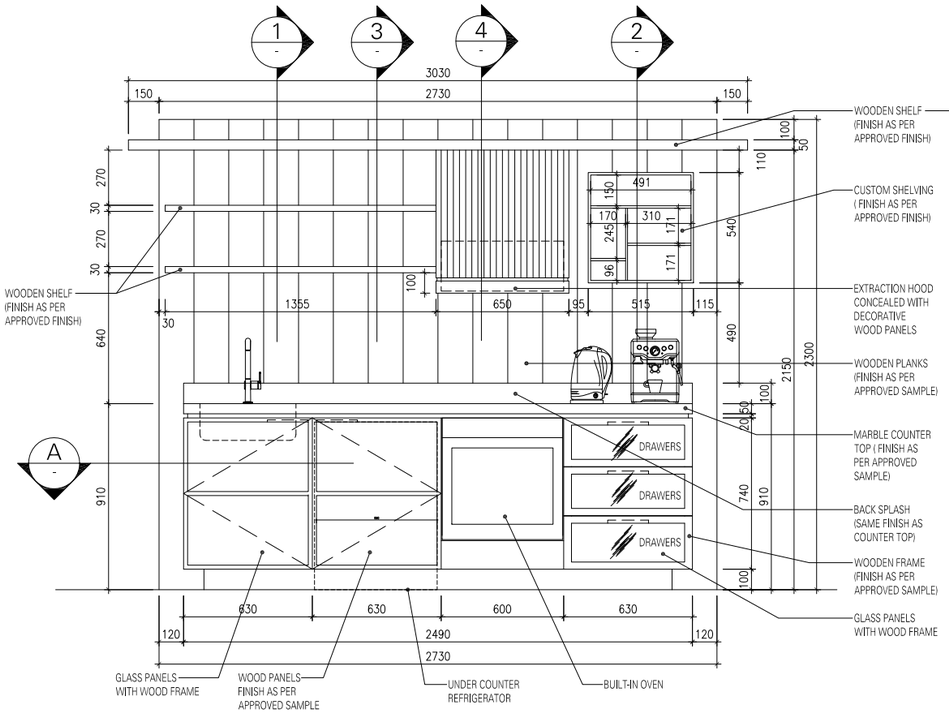

KITCHENETTE ELEVATION

SCALE 1:20

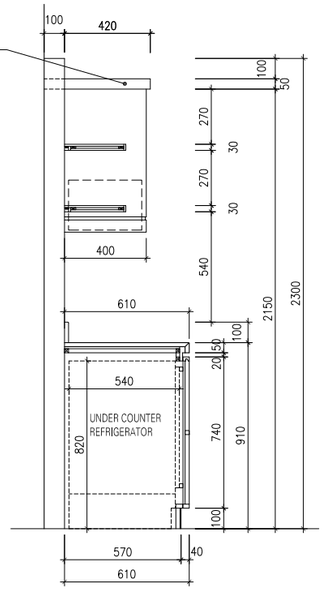

SECTION-1

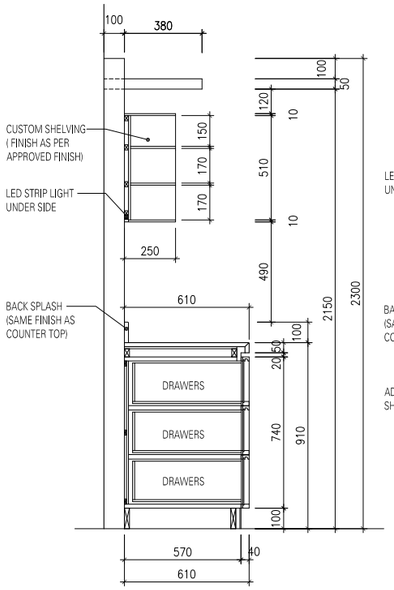

SECTION-2

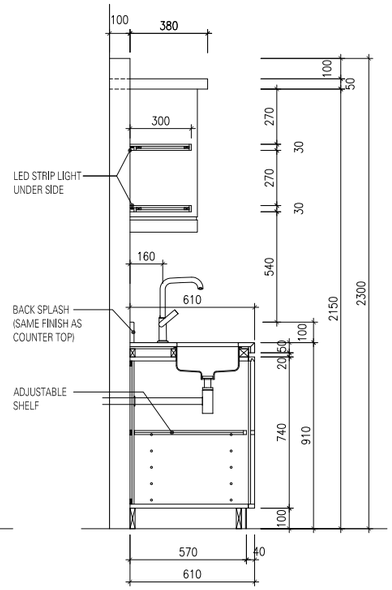

SECTION-3

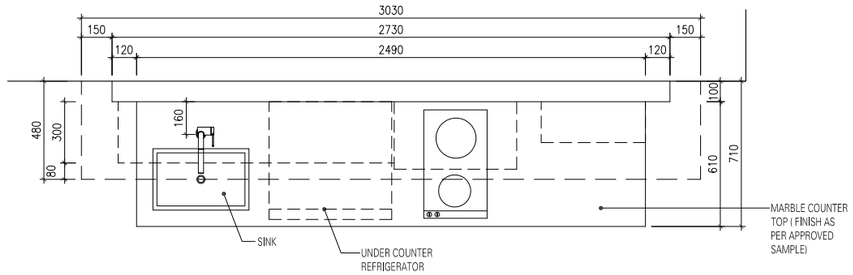

KITCHENETTE PLAN

SCALE 1:20

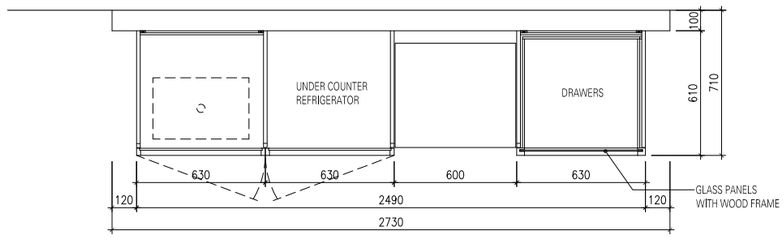

PLAN SECTION - A

SCALE 1:20

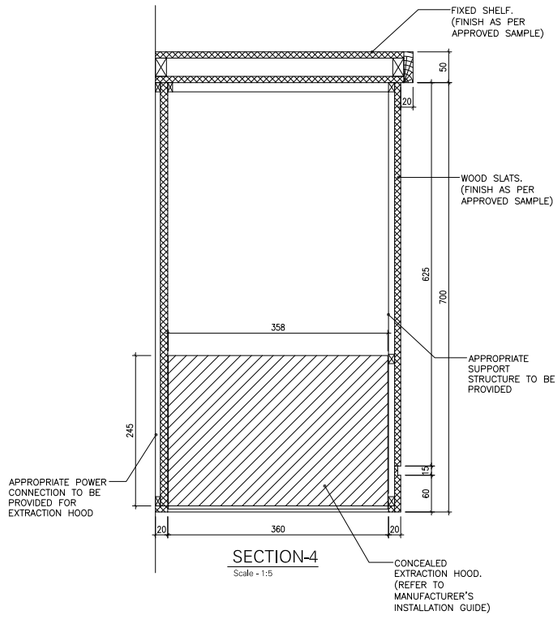

SECTION-4

Scale - 1:5

GENERAL NOTES

1. This drawing shall be read in conjuction with all other relevant architectural,structural & electrical drawings including those of other consultants.
2. It is the responsability of contractors & manufacturers to check all relevant site dimensions prior to the start of construction or manufacture.
3. All materials and components must be installed on site in accordance with manufacturer's instructions , shop drawings and standard details.
4. All dimensions are in millemeters unless noted otherwise.
5. Full working drawings, specifications and samples are to be provided by Contractor/Supplier for approval prior to manufacture.

KEY PLAN

REV.#	GENERAL NOTES	DRAWN BY	CHECKED BY	APPROVED BY	DATE
B	GENERAL REV.	MP	AM	SM	2025.08.21
A	GENERAL REV.	MP	AM	SM	2025.02.07
X	INITIAL ISSUE	AC	AM	AM	2025.01.05

PROJECT TITLE: SAF-RIYADH

REFERENCE: SAF01 G

DRAWING TITLE: FIRST FLOOR KITCHENETTE (01-01) PLAN, ELEVATION, SECTIONS

DRAWING NUMBER: SK-120

REVISION: B

SCALE	FORMAT	ADDITIONAL NOTES	DESIGN DEVELOPMENT
1:20	A1		

SIMA MALAK + ALSSAMOURE DESIGN ASSOCIATES
P.O. Box 15707 - Riyadh 11454 KSA
Tel. 01 441 4963 - Fax. 01 441 3867
simals@simals.com

©SIMA MALAK + ALSSAMOURE DESIGN ASSOCIATES (ـــــــ) 2003
This document including all drawing and text is the property and copyright of SIMA MALAK + ALSSAMOURE DESIGN ASSOCIATES for use solely with respect to this Project and shall not be copied or reproduced by any means except by agreement in writing from SIMA MALAK + ALSSAMOURE DESIGN ASSOCIATES.