USB TYPE C AUDIO +MIC CODEC

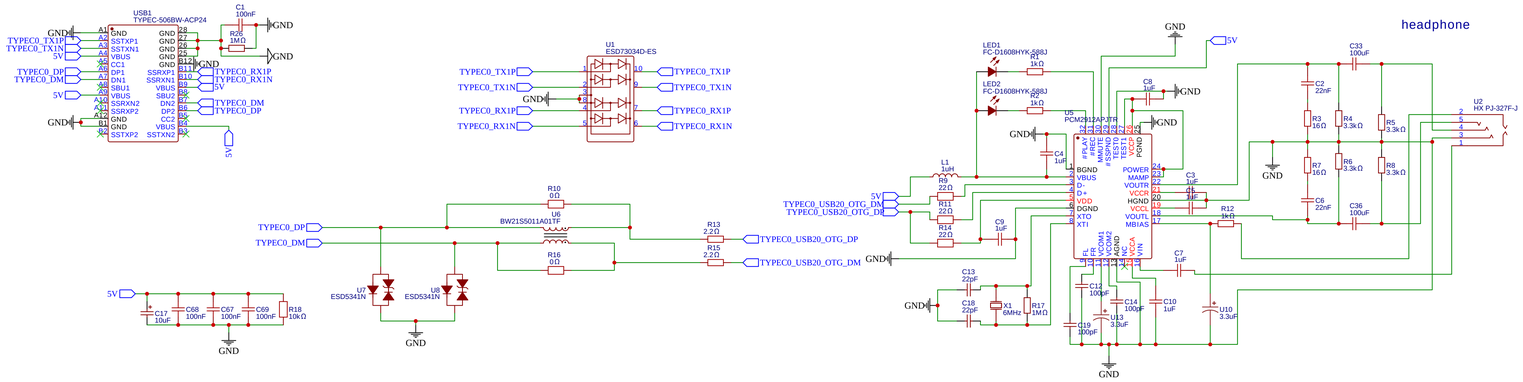

12V to 5V REGULATOR

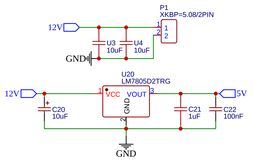

USB TYPE C TO USB TYPE A

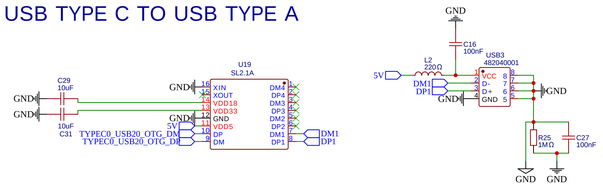

LAN7800 USB TO ETHERNET

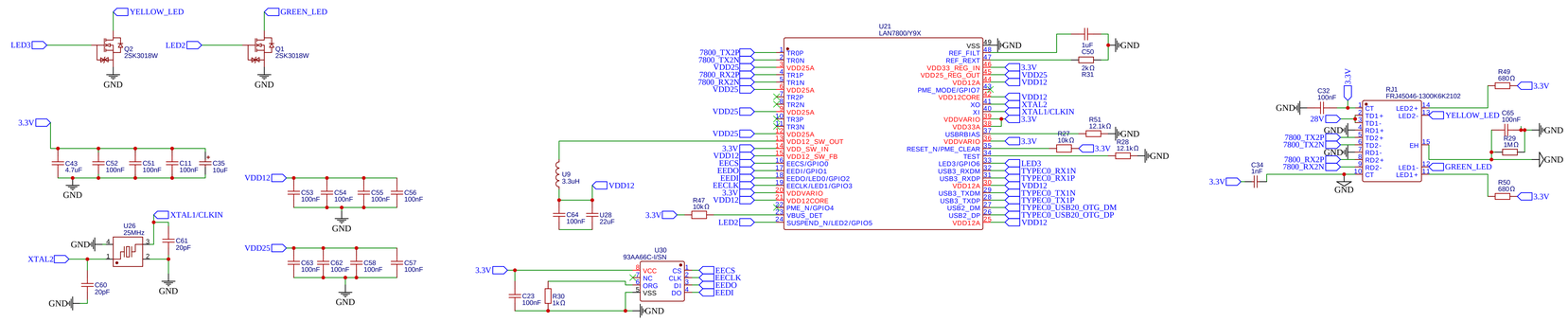

12V to 28V CONVERTER

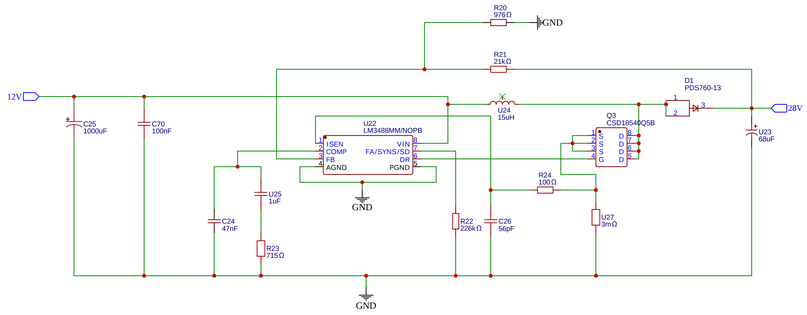

5V to 3.3V CONVERTER

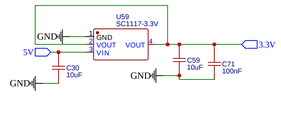

TITLE: Sheet_1	REV: 1.0
EasyEDA Company: Your Company	Sheet: 1/1
Date: 2024-10-18 Drawn By: muddessirarif140174	