Quantum Series™
ENGINEERING

QUANTUM *Series*

Semester - 6 Electrical & Electronics Engineering

Power Electronics

Session 2018-19 Even Semester

- Topic-wise coverage of entire syllabus in Question-Answer form.
- Short Questions (2 Marks)

Includes solution of following AKTU Question Papers:
2013-14 • 2014-15 • 2015-16 • 2016-17 • 2017-18

Includes Detailed Analysis of Previous AKTU Question Papers.

Scanned by TapScanner

CONTENTS

REE 601 : POWER ELECTRONICS

ANALYSIS OF AKTU PAPERS (2013-14 TO 2017-18) **(A–1 A to A–7 A)**

UNIT-1 : POWER SEMICONDUCTOR DEVICES **(1–1 A to 1–35 A)**

Introduction: Concept of Power Electronics, scope and applications, desired Characteristics of controllable switches
Power semiconductor switches and their characteristics: Power Diode, Power BJT, Power MOSFET, IGBT, SCR, TRIAC, GTO.

UNIT-2 : THYRISTOR & DC-DC CONVERTERS **(2–1 A to 2–33 A)**

Rating & protection, Methods of SCR commutation, Gate Drive Circuit, Series and Parallel operation.
DC-DC Converters: Introduction, Control Strategies, Buck converter, Boost Converter, Buck-Boost converter, Analysis of buck converter, Switched Mode power Supply (SMPS).

UNIT-3 : PHASE CONTROLLED CONVERTERS **(3–1 A to 3–36 A)**

Single phase half wave controlled rectifier with various loads, Effect of free wheeling diode. Single phase fully controlled and half controlled bridge converters with various loads. Performance Parameters of single phase uncontrolled and controlled converters. Three phase half wave converters, Three phase fully controlled and half controlled bridge converters, Effect of source impedance, Single phase and three phase dual converters.

UNIT-4 : AC VOLTAGE CONTROLLERS **(4–1 A to 4–30 A)**

Principle of On-Off and phase controls, Single phase ac voltage controller with resistive and inductive loads, sequence control, Introduction to Matrix converter.
Cyclo Converters: Basic principle of operation, single phase to single phase, three phase to single phase output voltage equation.

UNIT-5 : INVERTERS **(5–1 A to 5–28 A)**

Single phase and Three phase bridge inverters, VSI, CSI, Voltage control of single phaseinverters, PWM Techniques, Introduction to Multi level inverter.

SHORT QUESTIONS **(SQ-1A to SQ-16A)**

SOLVED PAPERS (2013-14 TO 2017-18) **(SP-1A to SP-20A)**

MI NOTE 9 PRO MAX

Scanned by TapScanner

Analysis of Previous AKTU Papers

Unit-1 : Power Semiconductor Devices

Part	Topics	2017-18	2016-17	2015-16	2014-15	2013-14	Que. No.
1.	Concept of power electronics	0	0	0	0	0	0
2.	Scope and applications	1	0	0	0	0	1.3
3.	Desired characteristics of controllabel switch	0	0	1	0	0	1.4
4.	Power diode	0	0	0	0	0	0
5.	Power BJT	0	0	0	2	0	1.8, 1.10
6.	Power MOSFET	1	1	0	1	0	1.13*
7.	IGBT	0	1	0	0	1	1.18*
8.	SCR	2	1	2	2	2	1.20, 1.21, 1.22*, 1.23*, 1.24, 1.25
9.	TRIAC	1	0	0	1	0	1.26*
10.	GTO	1	0	0	0	0	1.28
	Total Questions	6	3	3	6	3	

* = Asked in different years

Unit-2 : Thyristor and DC-DC Converter

Part	Topics	2017-18	2016-17	2015-16	2014-15	2013-14	Que. No.
1.	Rating and protection	1	1	0	0	1	2.1, 2.2, 2.4
2.	Methods of SCR commutation	0	1	0	1	1	2.7, 2.8, 2.9
3.	Gate drive circuit	0	0	0	0	0	0
4.	Series and parallel operation	0	1	1	1	1	2.11*, 2.13, 2.14
5.	DC-DC converter : Introduction and control strategies	0	0	0	0	0	0
6.	Buck converter, analysis of buck converter	0	0	0	0	0	0
7.	Boost converter	2	0	1	0	0	2.18, 2.19, 2.20
8.	Buck-boost converter	0	0	0	0	0	0
9.	Switched mode power supply (SMPS)	0	0	0	0	0	0
	Total Questions	3	3	2	2	3	

* = Asked in different years

Scanned by TapScanner

Unit-3 : Phase Controlled Converters

Part	Topics	2017-18	2016-17	2015-16	2014-15	2013-14	Que. No.
1.	Single phase half wave controlled rectifier with various loads, effect of free wheeling diode	0	1	0	1	1	3.1, 3.2, 3.7
2.	Single phase fully controlled and half bridge converter with various loads	0	1	2	0	1	3.9*, 3.11
3.	Performance parameters of single phase uncontrolled and controlled converter	0	0	0	0	0	0
4.	Three phase half wave converter	0	0	0	0	0	0
5.	Three phase fully controlled and half controlled bridge converter	0	0	0	0	0	0
6.	Effect of source impedance	0	0	1	1	0	3.19, 3.20
7.	Single phase and three phase dual converter	0	1	0	1	1	3.22*, 3.23
	Total Questions	0	3	3	3	3	

* = Asked in different years

Unit-4 : AC Voltage Controller

Part	Topics	2017-18	2016-17	2015-16	2014-15	2013-14	Que. No.
1.	Principle of ON-OFF and phase controls	1	0	1	0	1	4.1, 4.2, 4.4
2.	Single phase AC voltage controller with resitive and inductive load	0	0	1	1	2	4.6*, 4.7
3.	Sequence control of AC voltage controller	1	0	0	0	0	4.8
4.	Introduction of matrix converter	0	0	0	0	0	0
5.	Basic principle of operation of cycloconverter and single phase to single phase cycloconverter	2	0	0	1	1	4.11*, 4.12*
6.	Three phase to single phase output voltage equation	1	0	1	1	0	4.13*, 4.15
	Total Questions	5	0	3	3	4	

* = Asked in different years

Scanned by TapScanner

Unit-5 : Inverter							
Part	Topics	2017-18	2016-17	2015-16	2014-15	2013-14	Que. No.
1.	Single phase inverters and VSI	0	0	0	0	0	0
2.	Three phase bridge inverters	1	0	1	2	0	5.4*, 5.5, 5.6
3.	CSI	0	0	0	0	1	5.7
4.	Voltage control of single phase inverters	0	1	0	0	0	5.9
5.	PWM techniques	0	0	0	0	0	0
6.	Introduction to multi-level inverter	0	0	0	0	0	0
	Total Questions	1	1	1	2	1	

* = Asked in different years

2 Marks Questions						
Units \ Year	2017-18	2016-17	2015-16	2014-15	2013-14	Total Questions
Unit-1	3	4	2	0	0	9
Unit-2	2	4	2	0	0	8
Unit-3	1	1	2	0	0	4
Unit-4	4	0	2	0	0	6
Unit-5	0	0	2	0	0	2

Units	Ques. Asked (2013-14)
Unit-1	3
Unit-2	3
Unit-3	3
Unit-4	4
Unit-5	1

% Weightage of Units (2013-14)

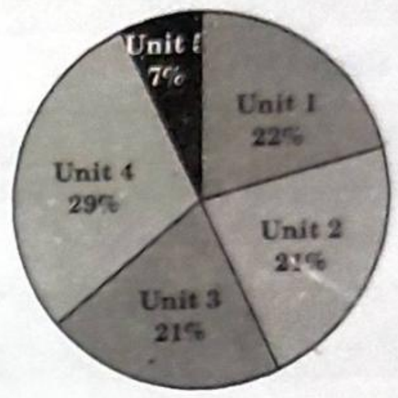

Units	Ques. Asked (2014-15)
Unit-1	6
Unit-2	2
Unit-3	3
Unit-4	3
Unit-5	2

% Weightage of Units (2014-15)

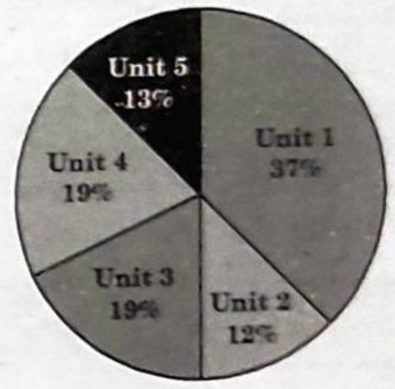

Units	Ques. Asked (2015-16)
Unit-1	3
Unit-2	2
Unit-3	3
Unit-4	3
Unit-5	1

% Weightage of Units (2015-16)

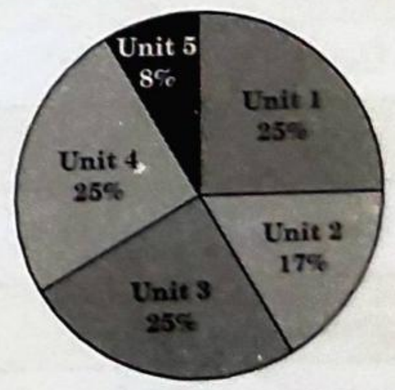

Scanned by TapScanner

Units	Ques. Asked (2016-17)	% Weightage of Units (2016-17)
Unit-1	3	
Unit-2	3	
Unit-3	3	
Unit-4	0	
Unit-5	1	

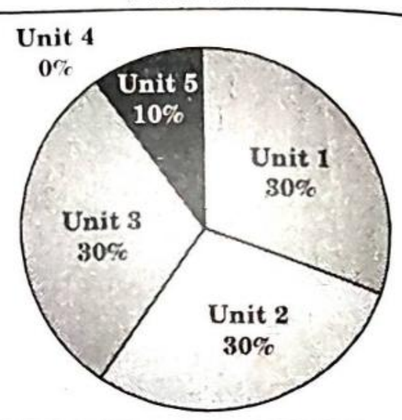

Units	Ques. Asked (2017-18)	% Weightage of Units (2017-18)
Unit-1	6	
Unit-2	3	
Unit-3	0	
Unit-4	5	
Unit-5	1	

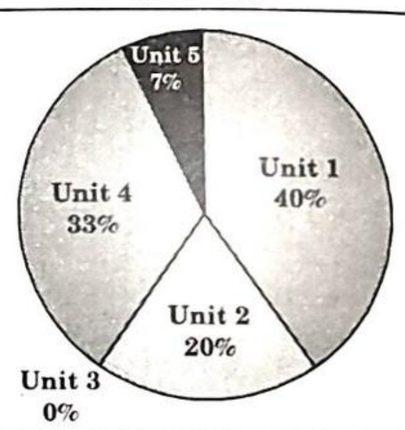

Units	Total Questions (2013-14 to 2017-18)	% Weightage of Units (2013-14 to 2017-18)
Unit-1	21	
Unit-2	13	
Unit-3	12	
Unit-4	15	
Unit-5	6	

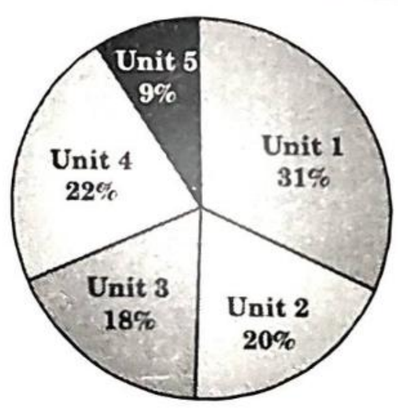

1 UNIT

Power Semiconductor Devices

CONTENTS

Part-1 : Concept of Power Electronics ..... **1–2A to 1–2A**

Part-2 : Scope and Applications ..... **1–3A to 1–4A**

Part-3 : Desired Characteristics of Controllable Switch ..... **1–4A to 1–5A**

Part-4 : Power Diode ..... **1–5A to 1–8A**

Part-5 : Power BJT ..... **1–8A to 1–13A**

Part-6 : Power MOSFET ..... **1–13A to 1–18A**

Part-7 : IGBT ..... **1–18A to 1–23A**

Part-8 : SCR ..... **1–23A to 1–31A**

Part-9 : TRIAC ..... **1–31A to 1–33A**

Part-10 : GTO ..... **1–33A to 1–35A**

Scanned by TapScanner

PART-1

Concept of Power Electronics.

Questions-Answers

Long Answer Type and Medium Answer Type Questions

Que 1.1. **What is power electronics ? Discuss briefly the concept of power electronics.**

Answer

1. Power electronics is a subject that concerns with the application of electronic principles into situations that are rated at power level rather than signal level.
2. It may also be defined as a subject that deals with the apparatus and equipment working on the principle of electronics but rated at power level rather than signal level.
3. For example, semiconductor power switches such as thyristors, GTOs etc.
4. The major components of a power electronic system are shown in the form of a block diagram in Fig. 1.1.1.
5. Main power source may be an AC supply system or a DC supply system.

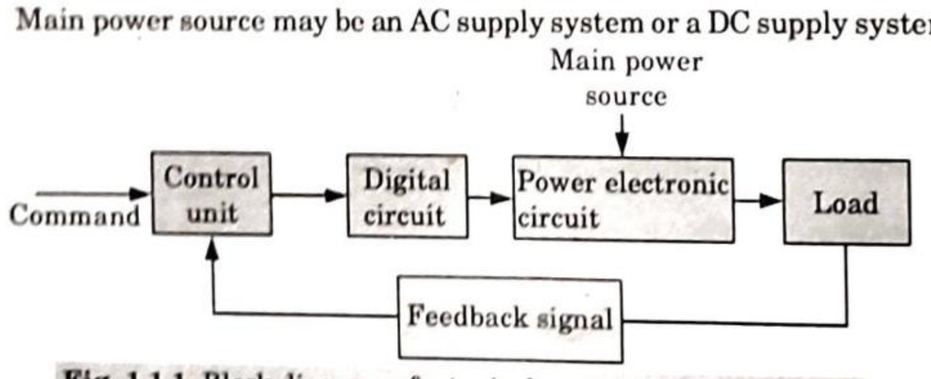

Fig. 1.1.1. Block diagram of a typical power electronic system.

6. The output from the power electronic circuit may be variable DC or AC voltage, or it may be a variable voltage and frequency.
7. In general the output of a power electronic convertor circuit depends upon the requirements of the load. For example, if the load is a DC motor, the converter output must be adjustable direct voltage.
8. The feedback component in Fig. 1.1.1 measures a parameter of the load and compares it with the command.

PART-2

Scope and Applications.

Questions-Answers

Long Answer Type and Medium Answer Type Questions

Que 1.2. **Explain different scopes of power electronics.**

Answer

1. **Switch-mode (DC) power supplies and uninterruptible power supplies :** Advances in microelectronics fabrication technology have led to the development of computers, communication equipment, and consumer electronics, all of which require regulated DC power supplies and uninterruptible power supplies.
2. **Energy conservation :** Increasing energy costs and the concern for the environment have combined to make energy conservation a priority.
3. **Process control and factory automation :** There is a growing demand for the enhanced performance offered by adjustable-speed-driven pumps and compressors in process control. Robots in automated factories are powered by electric servo drives.
4. **Transportation :** In many countries, electric trains have been in widespread use for a long time. Now, there is also a possibility of using electric vehicles in large metropolitan areas to reduce smog and pollution. Electric vehicles would also require battery chargers that utilize power electronics.
5. **Electro-technical applications :** These include equipment for welding, electroplating, and induction heating.
6. **Utility-related applications :** One such application is in transmission of power over high-voltage DC (HVDC) lines. At the sending end of the transmission line, line-frequency voltages and currents are converted into DC. This DC is converted back into the line-frequency AC at the receiving end of the line.

Que 1.3. **Write the applications of power electronics devices.**

AKTU 2017-18, Marks 10

Answer

1. **Aerospace :** Space shuttle power supplies, satellite power supplies, aircraft power systems.

Scanned by TapScanner

2. **Commercial :** Advertising, heating, airconditioning, central refrigeration, computer and office equipment, uninterruptible power supplies, elevators, light dimmers and flashers.
3. **Industrial :** Arc and industrial furnaces, blowers and fans, pumps and compressors, industrial lasers, transformer-tap changers, rolling mills, textile mills, excavators, cement mills, welding.
4. **Residential :** Airconditioning, cooking, lighting, space heating, refrigerators, electric-door openers, dryers, fans, personal computers, other entertainment equipment, vacuum cleaners, washing and sewing machines, food mixers, electric blankets, food-warmer trays.
5. **Telecommunication :** Battery chargers, power supplies (DC and UPS).
6. **Transportation :** Traction control of electric vehicles, electric locomotives, street cars, trolley buses, subways, automotive electronics.
7. **Utility systems :** High voltage DC transmission (HVDC), excitation systems, VAR compensation, static circuit breakers, fans and boiler-feed pumps, supplementary energy systems (solar, wind).

PART-3

Desired Characteristics of Controllable Switches.

Questions-Answers

Long Answer Type and Medium Answer Type Questions

Que 1.4. **What are the different desired characteristics of controllable switches ?**

OR

Write a short note on desired characteristics of a controllable switch. **AKTU 2015-16, Marks 05**

Answer

The following characteristics in a controllable switch are desirable :

1. Small leakage current in the off state.
2. Small on-state voltage V_{on} to minimize on-state power losses.
3. Short turn-on and turn-off times.
4. Large forward and reverse-voltage-blocking capability.
5. High on-state current rating.
6. Positive temperature coefficient of on-state resistance.

7. Small controlling power required to switch the device.
8. Capability to withstand rated voltage and rated current simultaneously while switching.
9. Large *dv/dt* and *di/dt* ratings.

PART-4

Power Diode.

Questions-Answers

Long Answer Type and Medium Answer Type Questions

Que 1.5. **What is power diode ? Also explain its *V-I* characteristics.**

Answer

A. Power Diode : Power diode is a two-layer, two terminal, *p-n* junction semiconductor device. It has one *p-n* junction formed by alloying diffusing or epitaxial growth. The two terminals of diode are shown in Fig. 1.5.1(*a*).

B. V-I Characteristics :

1. When anode is positive with respect to cathode, diode is said to be forward biased.
2. With increase of the source voltage V_s from zero value, initially diode current is zero.
3. From $V_s = 0$ to cut-in voltage, the forward-diode current is very small. Cut-in voltage is also known as threshold voltage or turn-on voltage.
4. Beyond cut-in voltage, the diode current rises rapidly and the diode is said to conduct.
5. When cathode is positive with respect to anode, the diode is said to be reverse biased.
6. In the reverse biased condition of the diode, a small reverse current, called leakage current, of microamperes or milliamperes flows.
7. The leakage current increases slowly with the reverse voltage until breakdown or avalanche voltage is reached. At this breakdown voltage, diode is turned on in the reversed direction.
8. If current in the reversed direction is not limited by a series resistance, the current will become quite high to destroy the diode.

Scanned by TapScanner

9. The reverse avalanche breakdown of a diode is avoided by operating the diode below specified peak repetitive reverse voltage V_{RRM}. Fig. 1.5.1(c) illustrates diode characteristics where V_{RRM} and cut-in voltage are shown.

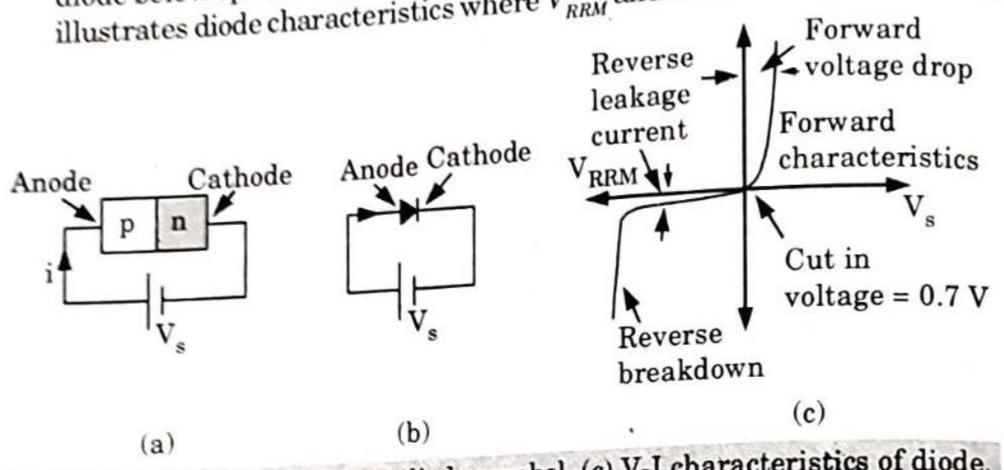

Fig. 1.5.1. (a) p-n junction, (b) diode symbol, (c) V-I characteristics of diode.

Que 1.6. **Classify power diodes.**

Answer

Types of power diodes : They are classified on the basis of their reverse recovery characteristics.

1. **General purpose diodes :**

i. These diodes have relatively high reverse recovery time, of about 25 μs. Their current rating vary from 1 A to several thousand amperes and the range of voltage rating is from 50 V to 5 kV.

ii. These are used in battery charging, electric traction, electroplating, welding and uninterrupted power supply.

2. **Fast recovery diodes :**

i. Low reverse recovery time, is about 5 μs or less. Their current rating vary from about 1 A to several thousand amperes and range of voltage rating is from 50 V to about 3 kV.

ii. These are used in choppers, commutation circuits, switching mode power supplies etc.

3. **Schottky diodes :**

i. This class of diodes uses metal to semiconductor junction for rectification purpose instead of *p-n* junction. These are characterized by very fast recovery time and low forward voltage drop.

ii. They have reverse voltage rating of 100 V and forward current ratings vary from 1 A to 300 A. Used in high frequency instrumentation and switching power supplies.

Que 1.7. **Explain the reverse recovery characteristic of power diodes. Also derive the expression for it.**

Answer

1. The current in a forward-biased junction diode is made up of majority carriers and minority carriers. Once there is a forward current, there will be free minority carriers.

2. A forward conducting diode whose forward current has been reduced to zero will continue to conduct for some small time after due to minority carriers stored in the *p-n*-junction and carriers stored in the bulk semiconductor material.

3. The forward current in a diode goes to zero if the diode goes from forward biased to reverse biased.

4. According to the characteristics of a diode, when reverse biased the diode does exhibit a reverse characteristic for a short duration of time due to the free carriers.

5. These minority carriers require some finite time, the reverse recovery time, to recombine with opposite charges in order to be neutralized. This time is called the reverse recovery time.

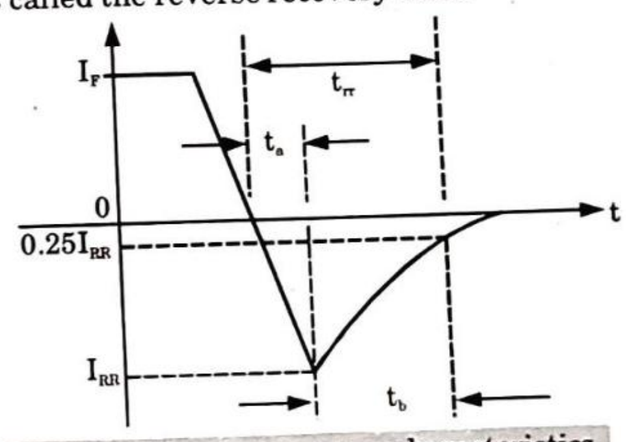

Fig. 1.7.1. Reverse recovery characteristics.

6. t_{rr} = Reverse recovery time, measured as the time between the initial zero crossing of the diode current to the time when this current reaches 25 % of the peak reverse current.

I_{RR} = Maximum reverse current

t_a = Time between zero crossing and the maximum reverse current and it is due to the charge stored in the depletion region of the junction

t_b = Time between maximum reverse current IRR and 25% of the of the maximum reverse current I_{RR} and is due to charge stored in the bulk semiconductor material

7. The reverse recovery time is measured from the initial zero crossing from forward conduction to reverse blocking condition of the diode current to 25 % of the maximum reverse current I_{RR}.

8. From Fig 1.7.1,

Scanned by TapScanner

$$t_{rr} = t_a + t_b \quad ...(1.7.1)$$

$$I_{RR} = t_a \frac{di}{dt} \quad ...(1.7.2)$$

$$\frac{t_a}{t_b} = \text{Softness factor (SF)}$$

9. **Reverse Recovery Charge :** This is the amount of charge carriers that flow across the diode in the reverse direction due to changeover from forward conduction to reverse blocking condition. Its value is determined from the area enclosed by the path of the reverse recovery.

$$Q_{RR} = \frac{1}{2} I_{RR} t_a + \frac{1}{2} I_{RR} t_b + \frac{1}{2} I_{RR} t_{rr} \quad ...(1.7.3)$$

$$I_{RR} = \frac{2Q_{RR}}{t_{rr}} \quad ...(1.7.4)$$

10. From eq. (1.7.2) and (1.7.4) we get

$$I_{RR} = \frac{2Q_{RR}}{t_{rr}} = t_a \frac{di}{dt}$$

$$t_a t_{rr} = \frac{2Q_{RR}}{di/dt} \quad ...(1.7.5)$$

11. If t_b is negligible in comparison to t_a, then

$$t_{rr} \approx t_a$$

12. Putting $t_{rr} = t_a$ in eq. (1.7.5)

$$t_{rr} = \sqrt{\frac{2Q_{RR}}{di/dt}}$$

$$\therefore \quad I_{RR} = \frac{2Q_{RR}}{t_{rr}} = \sqrt{2Q_{RR} \frac{di}{dt}} \quad ...(1.7.6)$$

PART-5

Power BJT.

Questions-Answers

Long Answer Type and Medium Answer Type Questions

Que 1.8. **What are the characteristics of an ideal power switching device ?**

AKTU 2014-15, Marks 05

Answer

1. Infinite forward current carrying capability.
2. Zero on-state voltage drop.
3. Zero on-state resistance.
4. Infinite forward or reverse blocking voltage capability.
5. Zero off-state leakage current.
6. Infinite off-state resistance.
7. Zero switching time from off-state to on-state and vice-versa.
8. Zero gate or base drive power.
9. Completely controlled by gate or base drive.
10. Infinite dv/dt and di/dt capabilities.
11. Zero thermal impedance from junction to ambient.
12. Infinite value of i^2t, *i.e.*, infinite heat carrying capacity.

Que 1.9. **Explain power transistor (BJT). Also discuss the input and output characteristics of power transistor (BJT) with the help of waveform.**

Answer

A. Power transistor :

1. A bipolar transistor is a 3 layer, 2 junction *n-p-n* or *p-n-p* semiconductor device. Current flows due to movement of both holes and electrons.

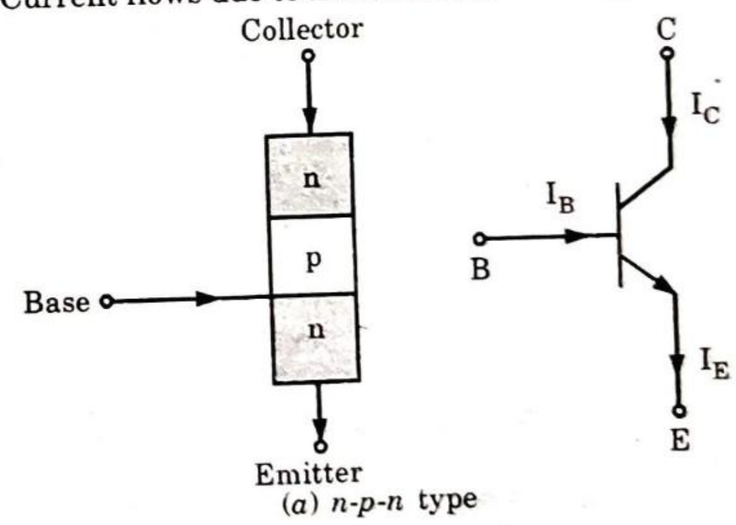

(*a*) *n-p-n* type

Scanned by TapScanner

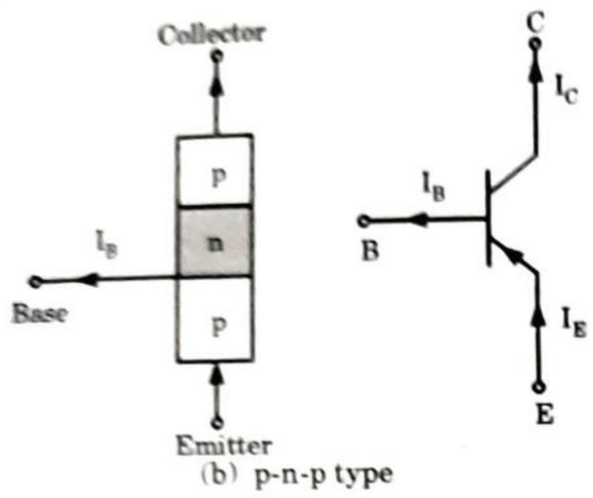

(b) p-n-p type

Fig. 1.9.1.

B. Input characteristics : The graph between base current I_B and bas emitter voltage V_{BE} gives input characteristics.

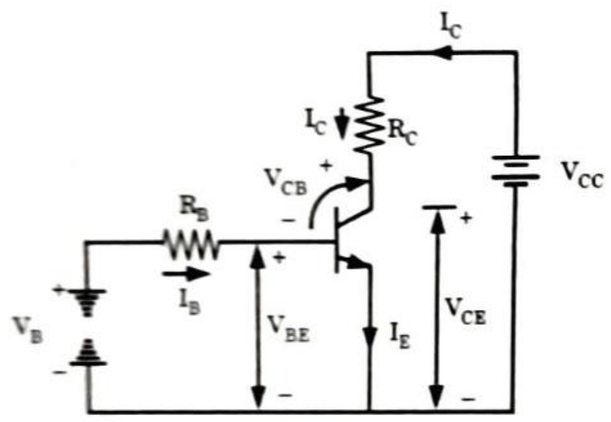

Fig. 1.9.2.

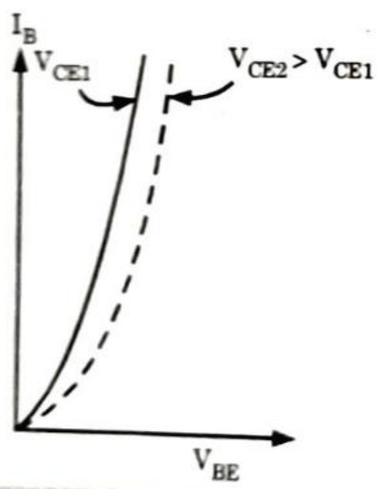

Fig. 1.9.3. Input characteristics.

C. Output characteristics :

1. A graph between collector current I_c and collector-emitter voltage V_{CE} gives output characteristics of a transistor.
2. For zero base current, *i.e.* for $I_B = 0$, as V_{CE} is increased, a small leakage (collector) current exists as shown in Fig. 1.9.4.
3. As the base current is increased from $I_B = 0$ to I_{B1}, I_{B2} etc, collector current also rises as shown in Fig. 1.9.4.

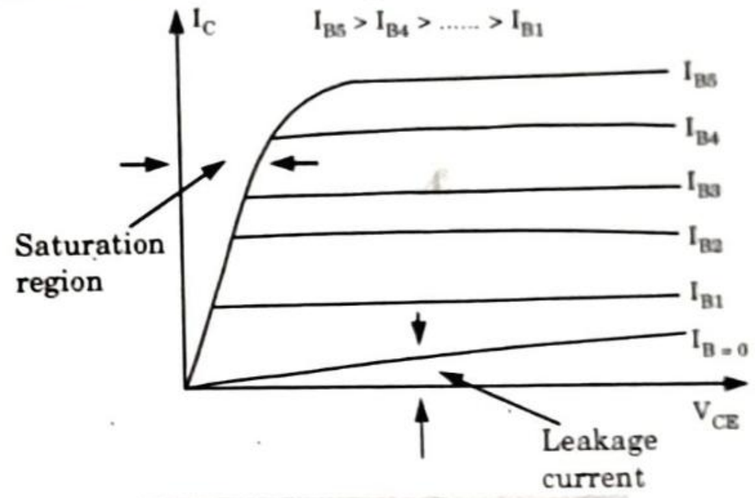

Fig. 1.9.4. Output characteristics.

Que 1.10. **Explain the switching characteristics of a BJT.**

AKTU 2014-15, Marks 05

Answer

1. When a base current is applied, a transistor can't be turned on instantly because of the presence of internal capacitances.

2. **Delay time :**

i. When base-emitter voltage V_{BE} is applied, the base current rises to I_{BS}, the I_C remains to zero or equal to leakage current I_{CEO}.

ii. The time at which collector current begins to rise is called delay time t_d. This is due to the time required to charge the base-emitter capacitance to $V_{BES} = 0.7$ V.

3. **Rise time t_r :**

i. After this delay time t_d, collector current rises to steady state value I_{CS} in time t_r is called rise time.

$$t_{ON} = t_d + t_r$$

This is BJT turn-on time.

ii. Rise time depends upon the input capacitance. During rise time t_r, collector-emitter voltage falls from V_{CC} to V_{CES}. The transistor remains in the ON and saturated state as long as forward base current is maintained.

Scanned by TapScanner

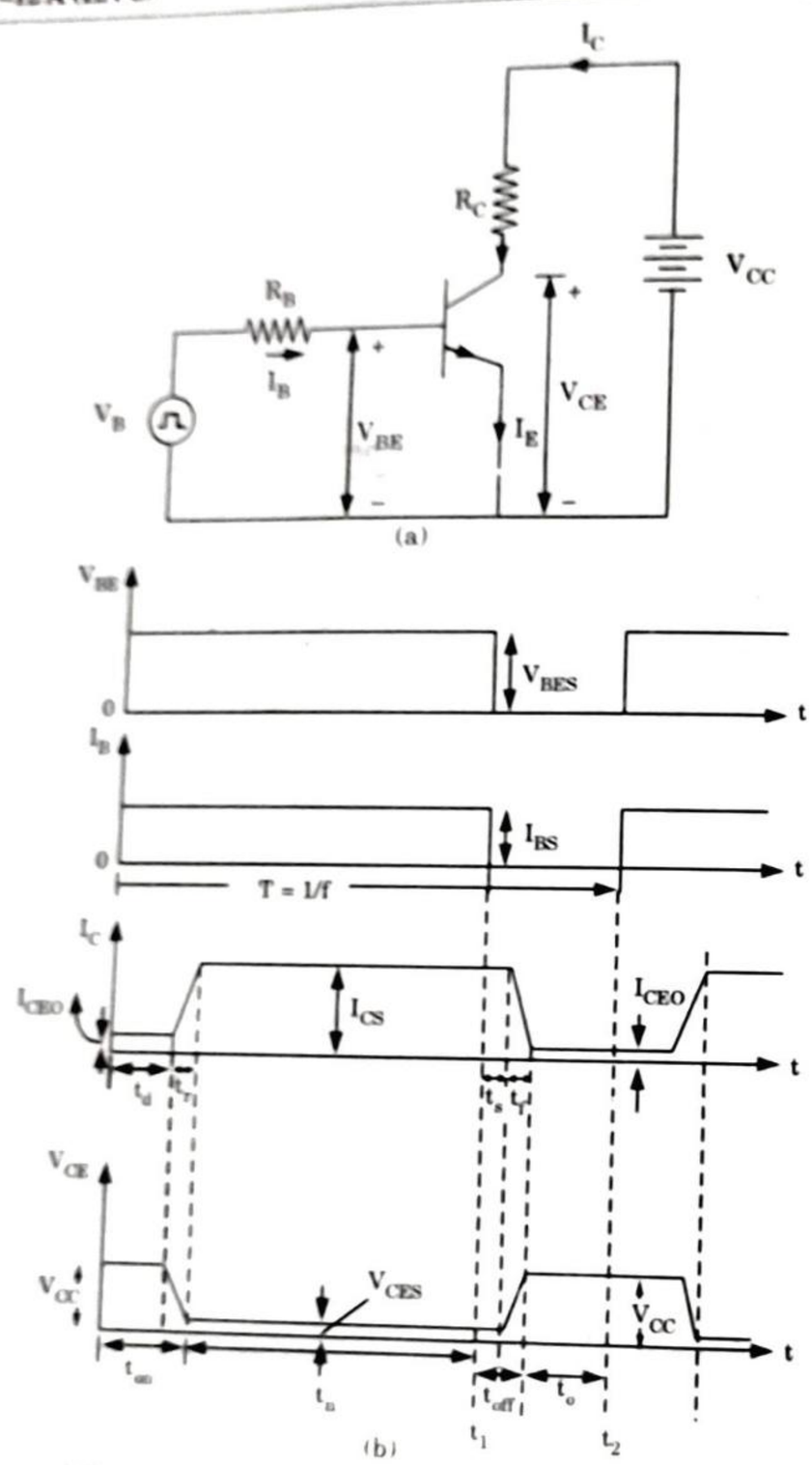

Fig. 1.10.1. (a) Transistor with resistive load and (b) Switching waveform for *n-p-n* transistor.

4. **Storage time :** When the base-emitter voltage V_{BE} is removed at time t_1, the collector current does not change for a time t_s, called storage time.

During t_s, saturating charge is removed from the base. After t_s, collector current beings to fall and at the same time, collector voltage starts building up.

5. **Fall time :** After times t_f, called fall time, I_C decreases to I_{CEO} and collector-emitter voltage rises to V_{CC}. Sum of storage time and fall time gives the transistor turn-off time.

PART-6

Power MOSFET.

Questions-Answers

Long Answer Type and Medium Answer Type Questions

Que 1.11. **Explain power MOSFET. Also explain working and types of MOSFET.**

Answer

A. Power MOSFET :

1. A metal oxide semiconductor field effect transistor (MOSFET) is a unipolar device and its operation depends on the flow of the majority carries.
2. It is a voltage controlled device and it acts as a fast acting switch. It has very high input impedance and has a positive temperature coefficient of resistance.

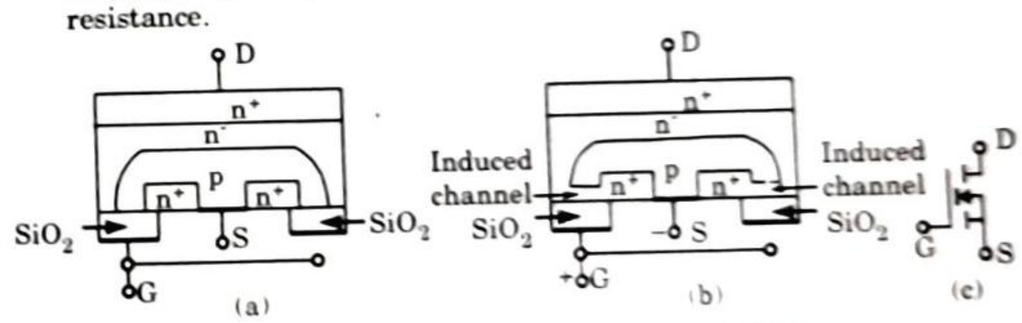

Fig. 1.11.1 (a) Basic structure of MOSFET, (b) Induced channel and (c) Symbol.

B. Types of MOSFET :

i. *n*-channel enhancement MOSFET
ii. *p*-channel enhancement MOSFET.
iii. *n*-channel depletion MOSFET.
iv. *p*-channel depletion MOSFET.

C. Structure :

1. The *n*-channel enhancement power MOSFET is more generally used because of higher mobility of electrons.

Scanned by TapScanner

2. The basic structure and device symbol of an n-channel power MOSFE are shown in Fig 1.11.1(a) and (c). It has three terminals: the drain, th source and the gate.
3. On a heavily doped n substrate (n^+) a lightly doped epitaxial n^- layer i grown. The p-region is then diffused into this epitaxial n^- layer and int this region heavily doped n^+ regions are diffused.
4. An insulating layer of SiO_2 is grown on the surface. This insulating laye is etched to provide terminals for the source.
5. The two n^+ regions make contact with the source terminal. Anothe metal contact is made to the SiO_2 layer to form the gate terminal.
6. A metal contact is made with the n^+ region at the other end whic makes the drain terminal.

D. Working :

1. With the gate circuit open, no current flows from the drain to the sourc because of one n^+ - p junction which is reverse biased.
2. When a positive supply is given to the gate with respect to the source, ar electric field is established in the SiO_2 layer below the gate. This induce negative charges in the p substrate below SiO_2 layer.
3. This forms an n-channel between the n^+ and n^- regions. This induced channel is shown in Fig. 1.11.1(b).
4. This channel provides a path for the flow of electrons from the source to the drain.
5. Thus a current can flow from drain to the source. If the gate supply is made more positive, the n-channel becomes deeper and therefore more current flows from the drain to the source.
6. The n-channel is enhanced by the increase of gate to source voltage and hence the name n-channel enhancement MOSFET.
7. The p-channel operation is same, except the voltage polarities are opposite to those of n-channel.

Que 1.12. Explain with neat diagram the construction and working of depletion type MOSFET.

Answer

1. An n-channel depletion-type MOSFET is formed on a p-type silicon substrate as shown in Fig. 1.12.1(a), with two heavily doped n^+ silicon for low-resistance connections.
2. The gate is isolated from the channel by a thin oxide layer. The three terminals are called gate, drain, and source.
3. The substrate is normally connected to the source. The gate-to-source voltage V_{GS} could be either positive or negative.
4. If V_{GS} is negative, some of the electrons in the n-channel area are repelled and a depletion region is created below the oxide layer, resulting in a narrower effective channel and a high resistance from the drain to source R_{DS}.

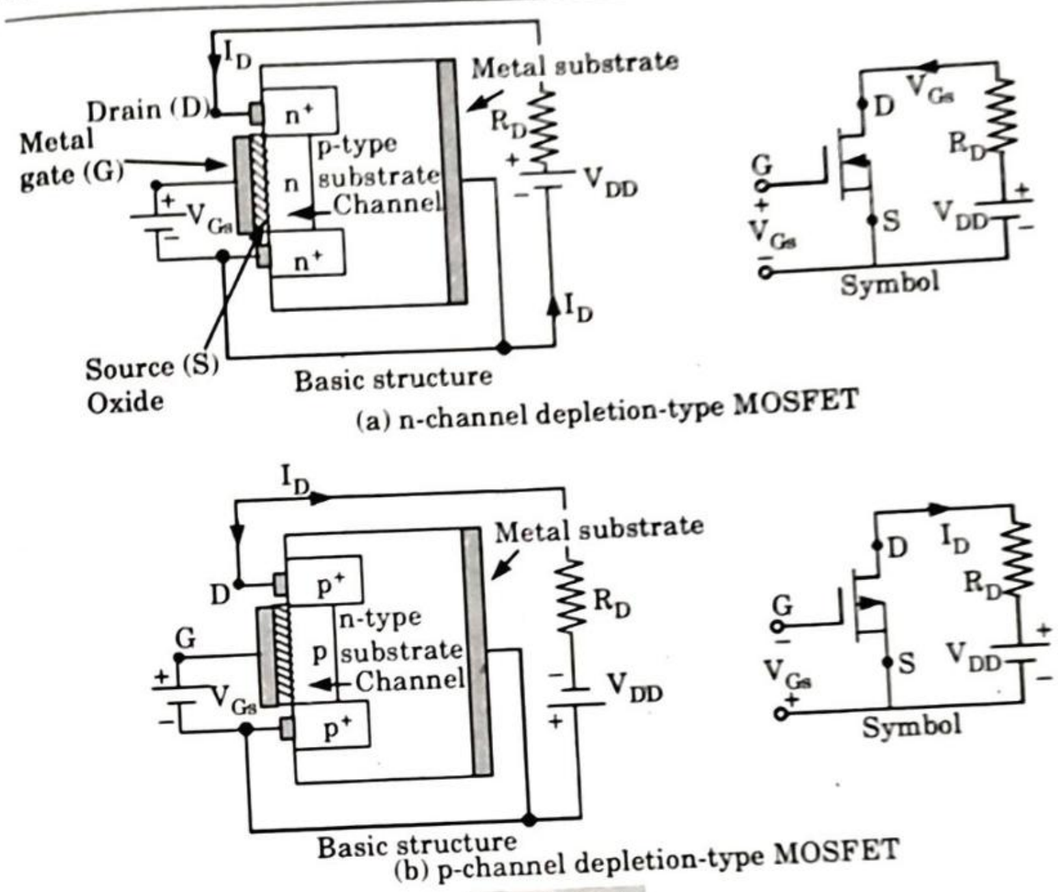

(a) n-channel depletion-type MOSFET

(b) p-channel depletion-type MOSFET

Fig. 1.12.1.

5. If V_{GS} is made negative enough, the channel becomes completely depleted, offering a high value of R_{DS}, and no current flows from the drain to source, $I_{DS} = 0$. The value of V_{GS} when this happens is called pinch-off voltage V_P.
6. On the other hand, V_{GS} is made positive, the channel becomes wider and I_{DS} increases due to reduction in R_{DS}.
7. With a p-channel depletion-type MOSFET the polarities of V_{DS}, I_{DS}, and V_{GS} are reversed as shown in Fig. 1.12.1(b).

Que 1.13. Describe with neat diagram the working of a depletion type p-channel MOSFET. Also draw its transfer characteristics.

AKTU 2016-17, Marks 10

OR

Draw and explain output characteristics of power MOSFET.

AKTU 2017-18, Marks 10

OR

Explain the steady state and switching characteristics of MOSFET.

AKTU 2014-15, Marks 05

Scanned by TapScanner

Answer

A. **Working :** Refer Q. 1.11, Page 1–13A, Unit-1.

B. **Depletion type *n*-channel MOSFET :** Refer Q. 1.12, Page 1–14A, Unit-1.

C. **Steady state characteristics :**

i. **Transfer characteristics :** This characteristics shows the variation of drain current I_D as a function of gate source voltage V_{GS}. The device is in the off state when threshold voltage is below V_{GST}. The magnitude of V_{GST} is of the order of 2 to 3 V.

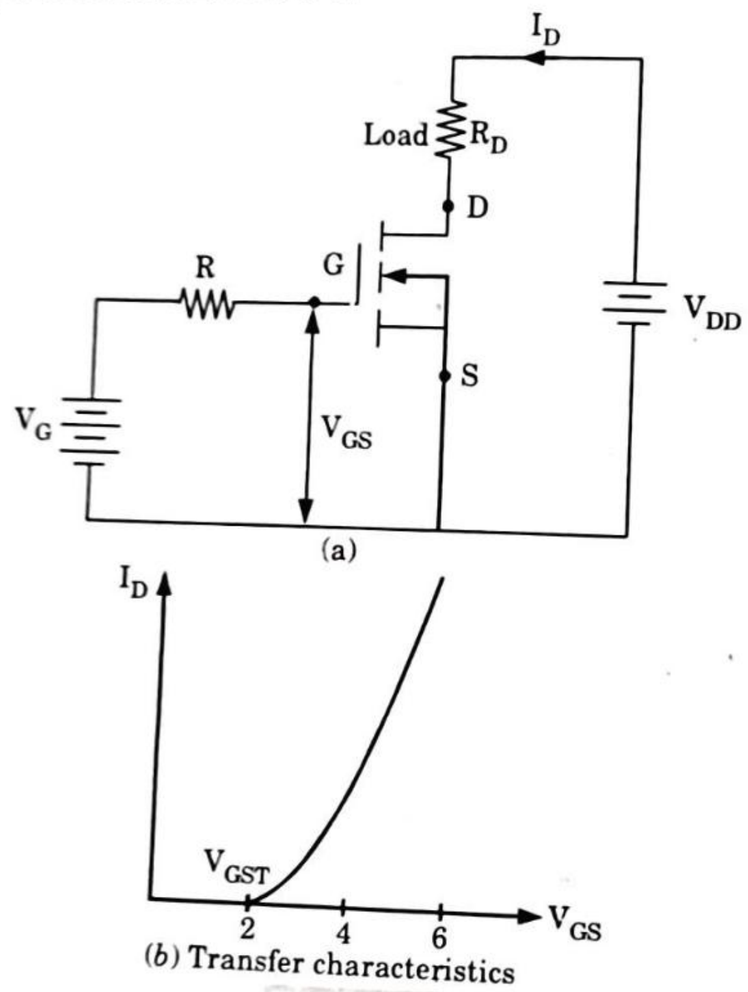

(*b*) Transfer characteristics

Fig. 1.13.1.

ii. **Output characteristics :**

1. It indicates the variation of drain current I_D as function of drain source voltage V_{DS}, with V_{GS} as a parameter.
2. For low values of V_{DS} the graph between $I_D - V_{DS}$ is almost linear. Therefore constant value of on resistance $R_{DS} = V_{DS}/I_D$.
3. For given V_{GS}, if V_{DS} is increased output characteristics is relatively flat *i.e.*, I_D is nearly constant.
4. Load line intersects the output characteristics at *A* and *B* are full on and off condition respectively. Power MOSFET operates as a switch either at *A* or *B*.

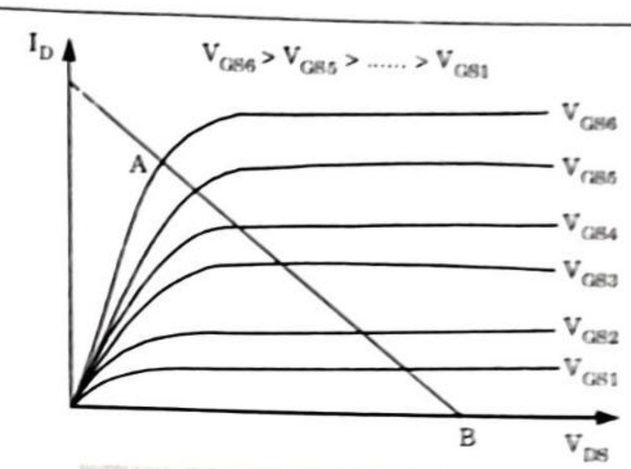

Fig. 1.13.2. Output characteristics.

C. **Switching characteristics :**

1. The switching characteristics of a power MOSFET are influenced by the internal capacitance of the device and the internal impedance of the gate drive circuit.
2. At turn-on there is initial delay t_{dn} and input capacitance charge to gate threshold voltage V_{GS}.

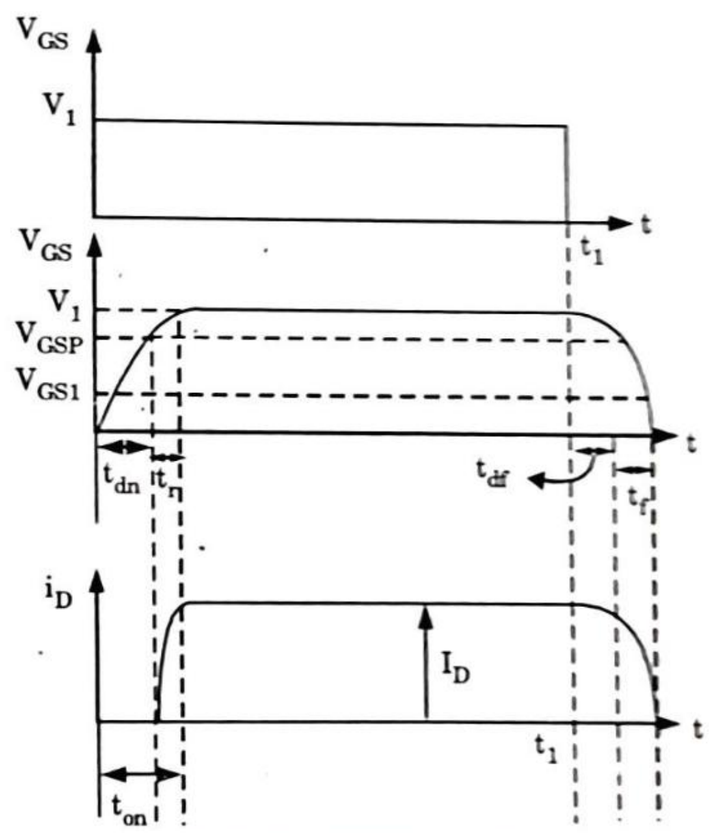

Fig. 1.13.3. Switching characteristics

Scanned by TapScanner

3. Here

t_{dn} = Turn on delay time

t_r = Rise time during which gate voltage rises to V_{GSP}. During t_r, i_D rises from zero to full on current I_D.

Turn on time, $t_{on} = t_{dn} + t_r$ can be reduced by using low-impedance gate drive source.

t_{df} = Turn-off delay time is time during which input capacitance discharges from overdrive gate voltage V_1 to V_{GSP}.

t_f = Fall time is time during which input capacitances discharge from V_{GSP} to threshold voltage, during t_f, i_D falls from I_D to zero. When $V_{GS} \le V_{GST}$, MOSFET turn-off is complete.

Que 1.14. **Compare power MOSFET and BJTs.**

Answer

S. No.	Power MOSFET	Power BJTs
1.	Voltage controlled device.	Current controlled device.
2.	Very high switching frequency.	Medium (20 kHz) switching frequency.
3.	ON state voltage drop is high.	ON state voltage drop is low.
4.	Lower switching losses.	Higher switching losses.
5.	Higher ON-resistance and conduction losses.	Lower conduction losses.
6.	Has positive temperature coefficient of resistance so parallel operation is easily accomplished.	Has negative temperature coefficient of resistance so parallel operation requires current sharing resistors.
7.	Secondary breakdown does not occur.	Secondary breakdown occurs.

PART-7

IGBT.

Questions-Answers

Long Answer Type and Medium Answer Type Questions

Que 1.15. **Explain basic structure and working of Insulated gate bipolar transistor (IGBT).**

Answer

1. An Insulated Gate Bipolar Transistor (IGBT) combines the advantages of BJTs and MOSFETs.
2. An IGBT has high impedance gate like that of a MOSFET which requires only a small gate current and a low ON-state power loss as that of a BJTs.
3. The basic structure and symbol of an n-channel IGBT is shown in Fig. 1.15.1(a) and (b).

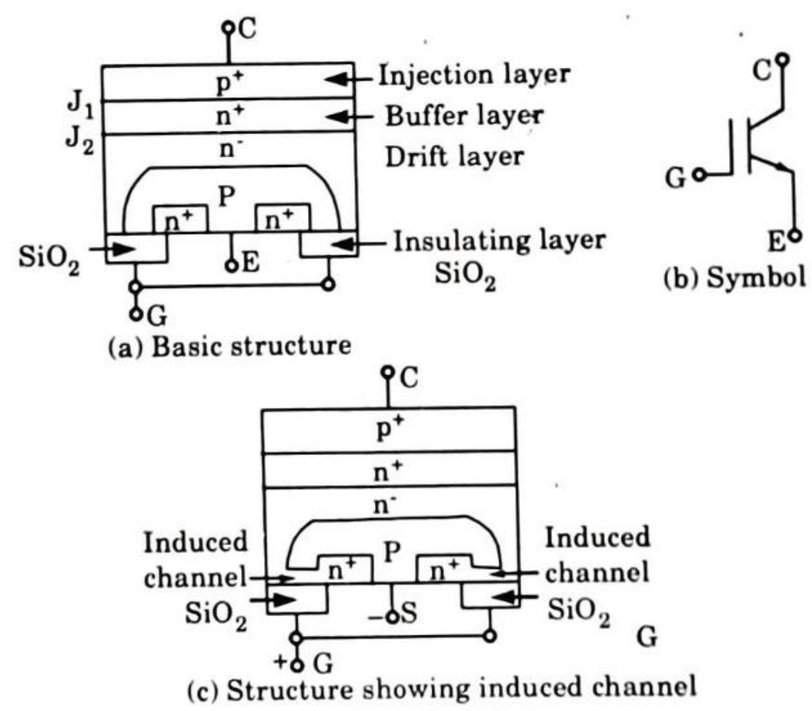

Fig. 1.15.1.

4. The structure of IGBT is almost similar to that of a MOSFET and it has three terminals namely the collector, the emitter and the gate.
5. An n channel IGBT is fabricated on a p^+ substrate. This region constitutes the collector of the IGBT. Over this an additional n^+ layer is formed which is the buffer layer.

Scanned by TapScanner

6. This is followed by a lightly doped n^- layer. Next to this is relatively large p layer. Two n^+ regions are diffused into this p layer as shown in Fig. 1.15.1(a).
7. An insulating layer of silicon dioxide (SiO_2) is made on the surface. This insulating layer is etched to provide metallic terminals for the emitter.
8. The two n^+ regions make contact with the emitter terminals. Another metal contact is made to the SiO_2 layer which forms the gate terminal.

Working :

1. When a positive voltage is applied at the collector terminal with respect to the emitter, in the absence of a gate-to-emitter voltage, the device cannot conduct because the junction J_2 remains reverse biased.
2. When a positive voltage is applied at gate with respect to the emitter, electrons are pulled from the n^+ region to the gate terminal.
3. Consequently a n-type channel is created between the n^+ region and the n^- region through the p region as shown in Fig. 1.15.1(c). This n channel short circuit the n^- regions with emitter n^+ region.
4. The flow of electrons from the n^+ emitter region through the channel to the n^- drift region acts as the base drive current for the *PNP* transistor. Hence electrons flow from the emitter to the collector.
5. Also this base current induces injection of holes from the p^+ collector region to the n^- drift region.
6. This high level of injection of holes increases the conductivity of the drift region. Eventually a forward current is established.
7. Thus the current flow from the collector to the emitter is due to the flow of both the electrons and holes and so the IGBT is bipolar device.

Que 1.16. **Describe characteristics of IGBT.**

Answer

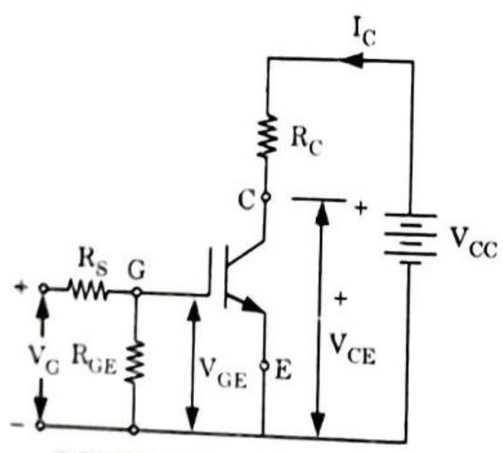

Fig. 1.16.1. Circuit diagram.

Output characteristics :

i. **Static *V-I* Characteristics :** The graph between collector current I_C and V_{CE} for various value of gate emitter voltage. It is also called output characteristics.

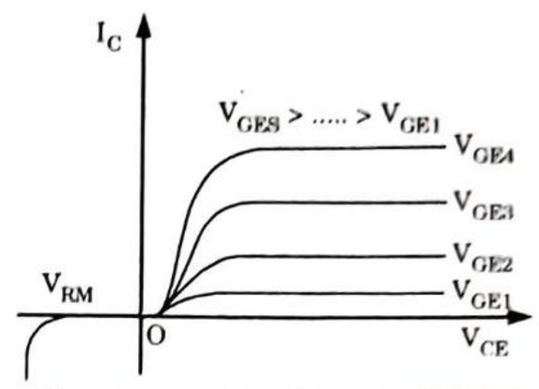

Fig. 1.16.2. Output characteristics.

ii. **Transfer characteristics :**

1. The graph between collector current I_C and gate emitter voltage V_{GE} is the transfer characteristics.

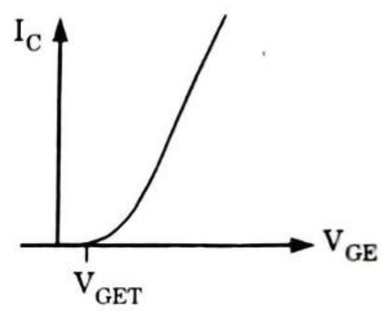

Fig. 1.16.3. IGBT.

Que 1.17. **Explain switching characteristics of an IGBT and also write applications.**

Answer

A. Switching characteristics :

1. Switching characteristics of an IGBT during turn ON and turn OFF are sketched in Fig. 1.17.1.
2. The turn-on time is defined as the time between the instant of forward blocking to forward ON-state. Turn-ON time is composed of delay time (t_{dn}) and rise time (t_r).
3. The delay time is defined as the time for the V_{CE} to fall from V_{CS} to 0.9 V_{CE} or also defined as the time for I_C rise its initial leakage current I_{CE} to 0.1 I_C.
4. The rise time is the time during which V_{CE} voltage falls from 0.9 V_{CE} to 0.1 V_{CE}. It is also defined as the time for the collector current rise from 0.1 I_C to its final value of I_C.

Scanned by TapScanner

It means $t_{on} = t_{dn} + t_r$

5. Turn off time consists of 3 intervals :

i. **Delay time (t_{df}) :** Time during gate voltage falls from V_{GE} to threshold voltage V_{GET}.

ii. **Initial fall time (t_{f1}) :** Time during which collector current falls from 90 to 20 % of its initial value I_C.

iii. **Final fall time (t_{f2}) :** Time during which collector currents falls from 20 to 10 % of I_C.

It means $t_{off} = t_{df} + t_{f1} + t_{f2}$

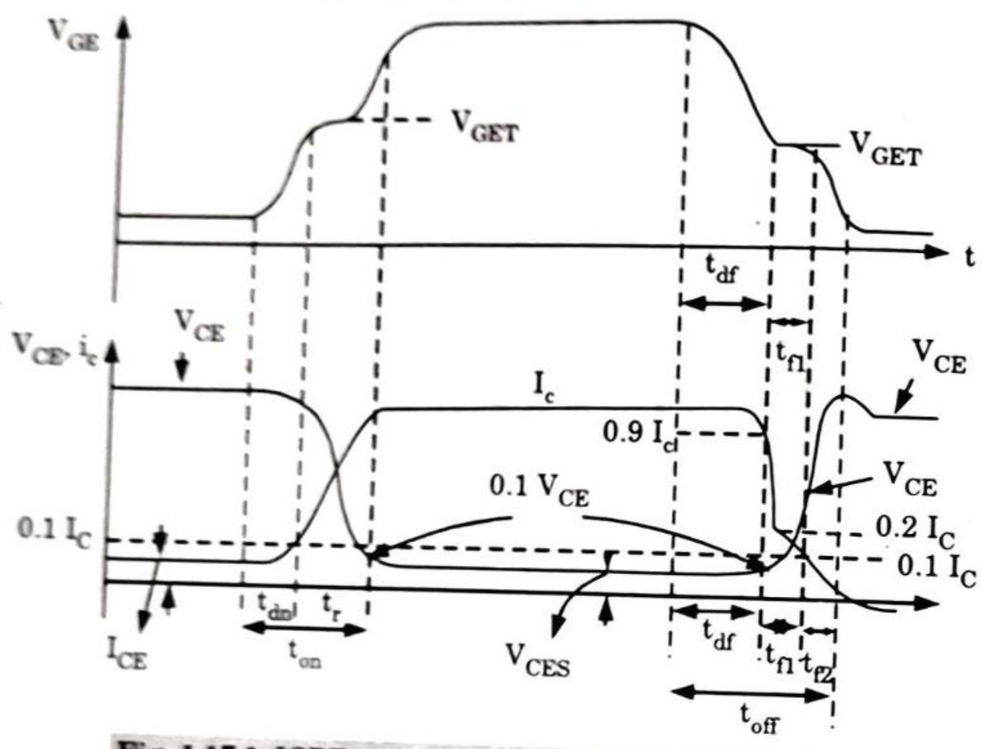

Fig. 1.17.1. IGBT turn-on and turn-off characteristics.

B. **Applications :** Used in medium power applications such as DC and AC motor drives, UPS system, power supplies and drives for solenoids, relays and contactors.

Que 1.18. **What are the characteristics of ideal power switching devices ? Compare characteristics of MOSFET and IGBT.**

AKTU 2013-14, Marks 05

OR

What are the characteristics of an ideal power switching device ? Compare and contrast the characteristics of IGBT and MOSFET.

AKTU 2016-17, Marks 10

Answer

A. **Ideal characteristics of power switching devices :** Refer Q. 1.8, Page 1–9A, Unit-1.

B. **Comparison :**

S. No.	Features	MOSFET	IGBT
1.	Switching frequency	High	Medium
2.	ON state voltage drop	High	Low
3.	Voltage blocking capability	Low	High

PART-8

SCR.

Questions-Answers

Long Answer Type and Medium Answer Type Questions

Que 1.19. **Explain construction and working of SCR.**

Answer

1. The structure and, symbol of the thyristor (SCR) are shown in Fig. 1.19.1. It is a four layered *P-N-P-N* switching device, having three junctions J_1, J_2 and J_3.
2. It has three external terminals, namely, the anode (*A*), cathode (*K*) and gate (*G*).
3. The anode and cathode are connected to the main power circuit. The gate terminal carries a low level gate current in the direction gate to cathode. Normally, the gate terminal is provided at the *P* layer near the cathode. This is known as cathode gate.
4. When the end *p* layer is made positive with respect to the end *n* layer, the two outer junctions, J_1 and J_3 are forward biased but the middle junction J_2 becomes reverse biased.
5. Thus the junction J_2, because of the presence of depletion layer does not allow any current to flow through the device. Only leakage current, negligibly small in magnitude, flows through the device due to the drift of the mobile charges. This current is insufficient to make the device conduct.

Scanned by TapScanner

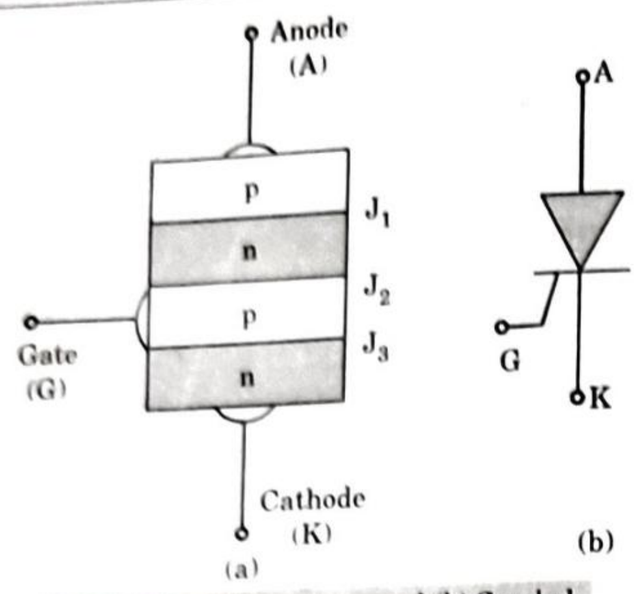

Fig. 1.19.1. (a) Structure and (b) Symbol.

6. The depletion layer, mostly of immobile charges does not constitute any flow of current. In other words, the SCR under the forward biased condition does not conduct. This is called as the forward blocking state or off-state of the device.
7. When the end *n* layer is made positive with respect to end *p* layer, the middle junction J_1 becomes forward biased, whereas the two outer junctions, J_2 and J_3 become reverse biased.
8. The junctions J_2 and J_3 do not allow any current to flow through the device. Only a very small amount of leakage current may flow because of the drift of the charges.
9. The leakage current is again insufficient to make the device conduct. This is known as the reverse blocking state or off-state of the device.
10. The width of the depletion layer at the junction J_2 decreases with the increase in anode to cathode voltage.
11. If the voltage between the anode and cathode is kept on increasing, a stage comes when the depletion layer at J_2 vanishes.
12. The reverse biased junction J_2 will breakdown due to the large voltage gradient across its depletion layer. This phenomenon is known as the avalanche breakdown.
13. Since the other junctions, J_1 and J_3 are already forward biased, there will be a free carrier movement across all the three junctions resulting in a large amount of current flowing through the device from anode to cathode.
14. Due to the flow of this forward current, the device starts conducting and it is then said to be in the conduction state or on state.

Que 1.20. **Explain V-I characteristics of SCR.**

OR

Explain the construction and working principle of SCR. Also draw the V-I characteristics of SCR. **AKTU 2017-18, Marks 10**

Answer

A. Construction and working : Refer Q. 1.19, Page 1–23A, Unit-1.

B. Characteristics :

1. The anode and cathode are connected to the main source through the load. The gate and cathode are fed from a source E_S which provides positive gate current from gate to cathode.

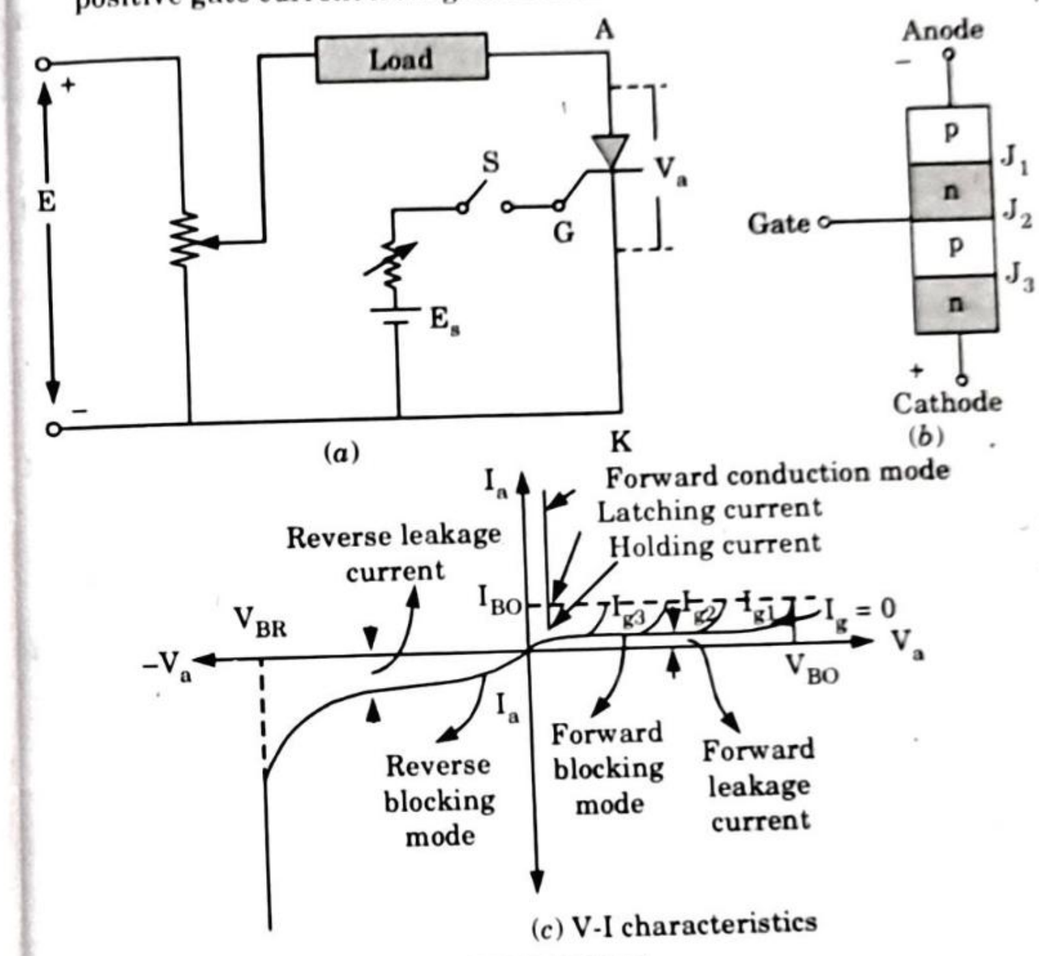

Fig. 1.20.1.

2. *V-I* characteristic reveals that the SCR has three modes of operation :

i. Reverse blocking mode

ii. Forward blocking mode, and

iii. Forward conduction mode.

Here, V_{BO} = Forward breakover voltage

V_{BR} = Reverse breakdown voltage

I_g = Gate current

Scanned by TapScanner

Operation :

a. Reverse blocking mode :

1. When cathode is positive with respect to anode junction J_1 and J_3 reverse biased and J_2 is forward biased and a small leakage curr flows. This is reverse blocking mode called the off-state of the thyrist
2. If reverse voltage is increased at a particular value V_{BR} *i.e.*, reve breakdown voltage, junction J_1 and J_3 breaks or avalanche occurs this voltage SCR may get damaged due to large current.

b. Forward blocking mode :

1. When anode is positive with respect to cathode with gate current o the thyristor is forward biased *i.e.*, J_1 and J_3 are forward biased and is reverse biased. A small leakage current called forward leakage curr flows.
2. When the forward voltage is increased then the reverse biased junct J_2 will have an avalanche breakdown at a voltage known as forw breakover voltage V_{BO}.
3. When forward voltage is less than V_{BO} it offers high impedance so c be used as an open switch in this mode.

c. Forward conduction mode :

1. The thyristor is brought from forward blocking mode to this mode turning it on by exceeding the forward breakover voltage or by applyi a gate pulse between gate and cathode.
2. Thyristor is in on state and behaves like a closed switch. The ano current is limited by load impedance as voltage drop across SCR is sma

Que 1.21. **Explain the significance of latching and holdi currents.** **AKTU 2014-15, Marks 0**

Answer

A. Latching current :

1. Latching current is the minimum value of the anode to cathode curre which it must attain during turn ON process to remain in the forwa ON state, when the gate signal is removed. The latching current shown as I_L is Fig. 1.21.1.
2. **Significance :** It gives the minimum anode current required for t transition from forward blocking state to forward ON state.

B. Holding current :

1. Holding current is the minimum value of the anode current in t forward conduction mode, below which the device is turned off.
2. The holding current is shown as I_h is Fig. 1.21.1. The holding current a thyristor is less than its latching current.

3. **Significance :** It gives the minimum value of anode current for the device to make a transition from forward ON mode to forward blocking mode.

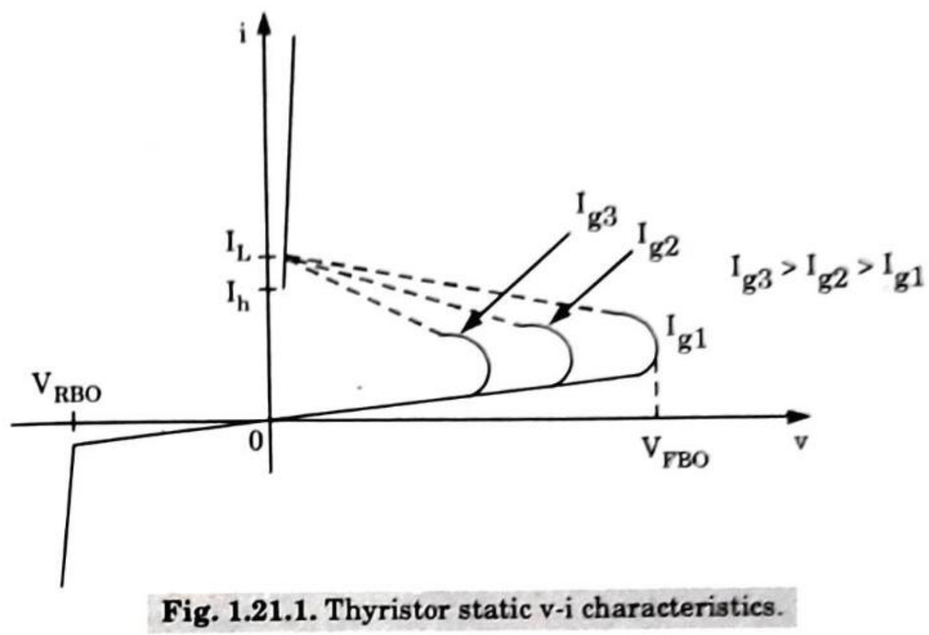

Fig. 1.21.1. Thyristor static v-i characteristics.

Que 1.22. **Explain the two transistor analogy of thyristor and derive the expression of anode current.** **AKTU 2015-16, Marks 10**

OR

Draw the two transistor model of SCR and derive an expression for anode current. **AKTU 2017-18, Marks 10**

OR

Explain two transistor analogy applied to a thyristor with the help of neat and clean illustrations. **AKTU 2016-17, Marks 10**

Answer

1. Two transistor model is obtained by bisecting the two middle layer. Junction $J_1 - J_2$ are *p-n-p* and junction $J_2 - J_3$ act as *n-p-n* transistor.
2. In off-state of transistor, collector current I_C is

$$I_C = \alpha I_E + I_{CBO}$$

where, α = Common base current gain,

I_{CBO} = Common base leakage current of collector base junction of a transistor.

3. For transistor Q_1,

$$I_E = I_a$$
$$I_C = I_{C1}$$

Scanned by TapScanner

$$I_{C1} = \alpha_1 I_a + I_{CBO1}$$

α_1 = Common base current gain of Q_1

I_{CBO1} = Common base leakage current of Q_1.

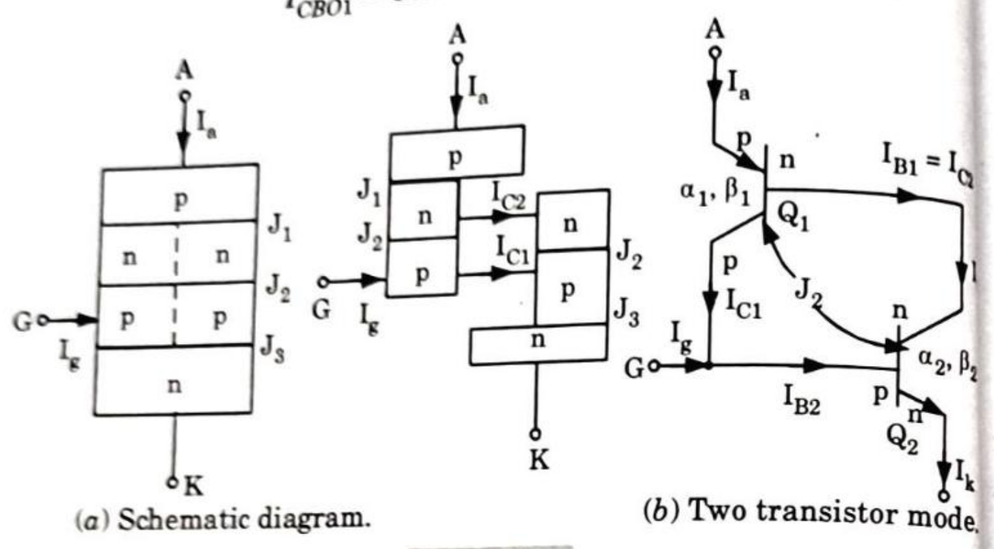

(*a*) Schematic diagram. (*b*) Two transistor mode.

Fig. 1.22.1.

4. Similarly for transistor Q_2,

$$I_{C2} = \alpha_2 I_k + I_{CBO2}$$

I_k = Emitter current.

5. Sum of two collector currents is equal to the external circuit curre I_a entering at anode

$$I_a = I_{C1} + I_{C2}$$

$$I_a = \alpha_1 I_a + I_{CBO1} + \alpha_2 I_k + I_{CBO2}$$

6. When gate current is applied then $I_k = I_a + I_g$

$$I_a = \alpha_1 I_a + I_{CBO1} + \alpha_2 (I_a + I_g) + I_{CBO2}$$

$$I_a = \frac{\alpha_2 I_g + I_{CBO1} + I_{CBO2}}{1 - (\alpha_1 + \alpha_2)} \quad ...(1.22.$$

By increasing $(\alpha_1 + \alpha_2)$ to approach to unity then I_a will tend to becom infinity thus turning on the device.

Que 1.23. **Discuss the two transistor model of a thyristor. Usin this model, describe the various mechanisms of turning ON thyristor.**

AKTU 2013-14, Marks 10

AKTU 2014-15, Marks 10

Answer

A. **Two transistor model :** Refer Q. 1.22, Page 1–27A, Unit-1.

B. **Various mechanism for turning ON transistor are :**

a. **Gate triggering :**

1. Anode is made positive with respect to cathode and gate current $I_g = 0$.
2. Equation

$$I_a = \frac{\alpha_2 I_g + I_{CBO1} + I_{CBO2}}{1 - (\alpha_1 + \alpha_2)} \quad ...(1.23.1)$$

It shows that the leakage current is more than $I_{CBO1} + I_{CBO2}$ therefore the device is in forward blocking state.

3. Now a gate current is applied between gate and cathode of the transistor. The gate current is equal to base current $I_{B2} = I_g$ and emitter current I_k of transistor Q_2.
4. Due to I_k, α_2 increases and develops I_{C2}. Now I_{C2} is I_{B1} for Q_1 due to I_{B1}, I_{C1} develops and increases α_1 in turn. Now $I_g + I_{C1}$ acts as a base current of Q_2 and I_k increases which increases the α_2 again increases due to I_{C2}. Now $(\alpha_1 + \alpha_2)$ tends to unity.
5. When regeneration has grown sufficiently, gate current is removed. Then thyristor is turned on.

b. **Forward voltage triggering :** If forward anode to cathode voltage is increased, collector to emitter voltage increases leakage current at junction J_2 increases which increases collector current of Q_1 and Q_2. Thus approaches to unity. This method must be avoided.

c. ***dv/dt* triggering :** The reversed biased junction J_2 behaves like a capacitor because of space charge present.

$$i = C_j \frac{dv}{dt}$$

This is collector current for Q_1 and Q_2. Rate of increase of anode voltage is large, the emitter current will be large and $(\alpha_1 + \alpha_2)$ approach unity.

d. **Temperature triggering :** At high temperature, the forward leakage current across the junction J_2 rises. This leakage current is collector current for the Q_1 and Q_2. Thus increasing emitter current and $(\alpha_1 + \alpha_2)$ approaches unity.

e. **Light triggering :** When light is thrown on silicon, the electron hole pair increases which increases the leakage current across J_2 thus increasing $(\alpha_1 + \alpha_2)$ to unity.

Que 1.24. **The SCR has $V_g - I_g$ characteristics given as $V_g = 1.5 + 8\, I_g$. In a certain configuration, the gate voltage consists of rectangular pulses of 12 V and of duration 50 ms with duty cycle of 0.2.**

i. **Find the value of R_g series resistor in gate circuit to limit peak power dissipation in the gate circuit to 5 W.**

ii. **Calculate the average power dissipation in the gate circuit.**

AKTU 2015-16, Marks 10

Scanned by TapScanner

Answer

Given : $V_g = 1.5 + 8I_g$, $E_g = 12$ V, $T = 50$ μs, $\alpha = 0.2$

To Find : R_g and P_{avg}.

1.
$$V_g I_g = 5$$
$$(1.5 + 8I_g)\, I_g = 5$$
$$1.5I_g + 8I_g^2 - 5 = 0$$
$$8I_g^2 + 1.5I_g - 5 = 0$$
$$\therefore \quad I_g = 0.701 \text{ A}$$

2. During the pulse-on period,
$$E_s = R_g I_g + V_g$$
$$12 = R_g I_g + 1.5 + 8I_g$$
$$12 = R_g (0.701) + 1.5 + 8 \times 0.701$$
$$R_g = 6.978\ \Omega$$

3.
$$P_m = \frac{P_{avg}}{\delta}$$
$$5 = \frac{P_{avg}}{0.2}$$
$$5 \times 0.2 = P_{avg}$$
$$P_{avg} = 1 \text{ W}$$

Que 1.25. **A DC supply of 100 V feeds a load resistance of 10 ohm and an inductance of 5 H through a thyristor. The latching current of thyristor is 50 mA. Find the minimum width of the gate pulse.**

AKTU 2013-14, Marks 05

Answer

Given : $E = 100$ V, $R = 10\ \Omega$, $L = 5$ H, $i = 50$ mA $= 0.05$ A

To Find : Minimum width of gate pulse.

1. Voltage equation :
$$E = Ri + \frac{Ldi}{dt}$$
$$i = \frac{E}{R}[1 - e^{-R/Lt}]$$

2. Substituting the values
$$0.05 = \frac{100}{10}[1 - e^{-2t}]$$

$$0.005 = [1 - e^{-2t}]$$
$$e^{-2t} = 0.995$$
$$e^{2t} = \frac{1}{0.995} = 1.005$$
$$t = 2.5 \times 10^{-3} \text{ sec}$$

3. Minimum width of the gate pulse = 2.5 msec

PART-9

TRIAC.

Questions-Answers

Long Answer Type and Medium Answer Type Questions

Que 1.26. **Explain structure of TRIAC and its working.**

OR

Explain working of TRIAC.

AKTU 2017-18, Marks 10

AKTU 2014-15, Marks 05

Answer

A. Construction :

1. A TRAIC is basically a bidirectional device which can conduct in either direction. A TRAIC is electrically equivalent to two thyristors connected in antiparallel.
2. The basic structure, the circuit symbol and thyristor equivalence are shown in the Fig.1.26.1.

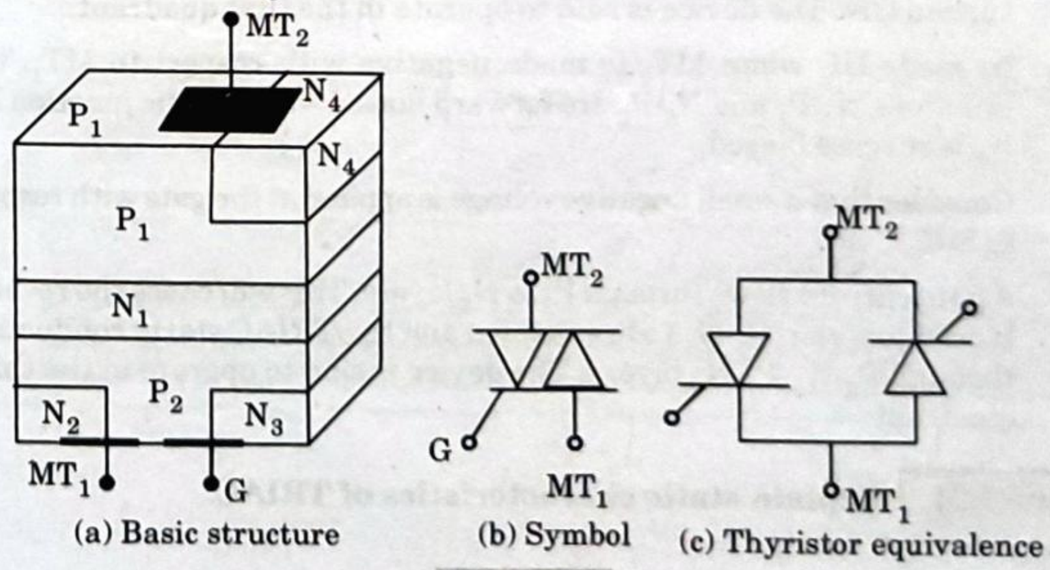

(a) Basic structure (b) Symbol (c) Thyristor equivalence

Fig. 1.26.1.

Scanned by TapScanner

3. The terminals are marked as MT_1 (main terminal 1), MT_2 and G. With no signal applied to the gate, the TRIAC can block both the half cycles of an AC voltage, if the peak value of the supply voltage is less than both the forward and reverse break over voltage of the device.

4. A TRIAC can be turned ON in each half cycle of the applied AC voltage by applying a small positive or negative voltage to the gate with respect to the terminal MT_1.

B. Working :

1. The device can have four different modes of operation depending on the polarity of the voltage applied between MT_1 and MT_2 and the polarity of Gate with respect to MT_1 :

i. **Mode I :** MT_2 is positive with respect to MT_1 and Gate is positive with respect to MT_1.

ii. **Mode II :** MT_2 is positive with respect to MT_1 and Gate is negative with respect to MT_1

iii. **Mode III :** MT_2 is negative with respect to MT_1 and Gate is negative with respect to MT_1

iv. **Mode IV :** MT_2 is negative with respect to MT_1 and Gate is positive with respect to MT_1

2. In mode I, when MT_2 is positive with respect to MT_1, the junctions P_1 - N_1 and P_2 - N_2 are forward biased and the junction N_1 - P_2 is reverse biased.

3. Consider that a small positive voltage is applied at the gate with respect to MT_1. A gate current flows through P_2 to N_2 layers. This injects enough electrons into the P_2 layer and this causes the reverse biased junction $N_1 - P_2$ to breakdown.

4. Thus the TRIAC starts conducting through P_1-N_1-P_2-N_2 layers and is turned ON. The device is said to operate in the first quadrant.

5. In mode III, when MT_2 is made negative with respect to MT_1, the junctions N_4-P_1 and N_1-P_2 are forward biased whereas the junction P_1-N_1 is reverse biased.

6. Consider that a small negative voltage is applied at the gate with respect to MT_1.

7. A gate current flows through P_2 to N_3 layers. This will cause the reverse biased junction P_1-N_1 to breakdown and the TRIAC starts conducting through P_2-N_1-P_1-N_4 layers. The device is said to operate in the third quadrant.

Que 1.27. **Explain static characteristics of TRIAC.**

Answer

1. A TRIAC is similar to two thyristors connected in anti parallel. The *V-I* characteristic of a TRIAC can be drawn in the 1st and 3rd quadrant of a *V-I* plane which will be similar to forward and reverse characteristics of a thyristor as shown in Fig 1.27.1.

2. It is a latching device and needs only a short pulse at its gate to turn it ON.

3. The gate remains ineffective after turn ON but the device continues to conduct. It turns OFF when the current tends to reverse due to the reversal of the polarity of the voltage across the main terminals.

4. The gate now regains control and it can be triggered again with a negative pulse.

5. The device is once again turned into ON state and continues to conduct.

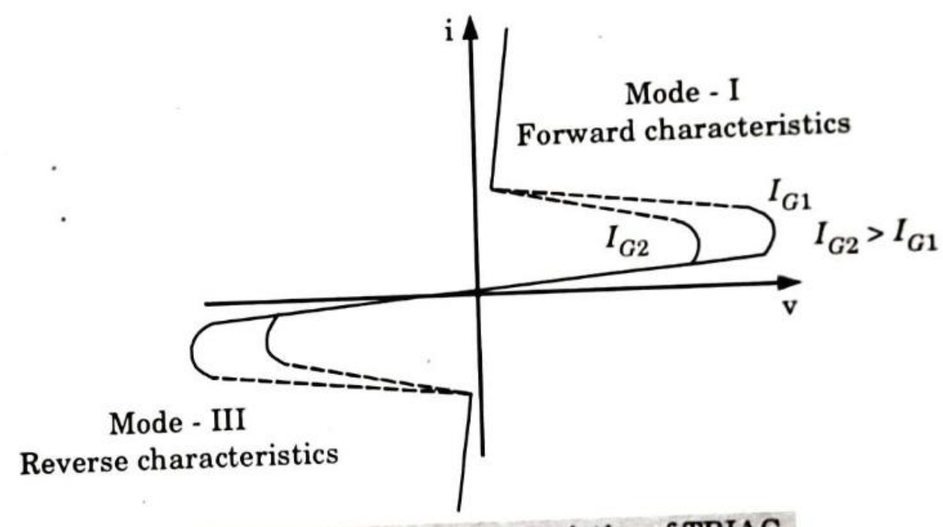

Fig. 1.27.1. Static characteristics of TRIAC.

PART-10

GTO.

Questions-Answers

Long Answer Type and Medium Answer Type Questions

Scanned by TapScanner

Que 1.28. **Explain GTO and its VI characteristics.**

OR

Explain working of GTO. **AKTU 2017-18, Marks 10**

Answer

1. The GTO is a three-terminal device with anode, cathode and gate terminals. The various circuit symbols are shown in Fig. 1.28.1.
2. The GTO switches regeneratively into the ON state when a positive gating signal is applied to the base of the *N-P-N* transistor.
3. When a negative bias is applied at the gate, excess carriers are drawn from the base region of the *N-P-N* transistor, and the collector current of the *P-N-P* transistor is diverted into the external gate circuit.
4. Thus, the base drive of the *N-P-N* transistor is removed and this, in turn, removes the base drive of the *P-N-P* transistor, and stops conduction.

Static V-I characteristics of GTOs :

1. Typical static V-I characteristics for a GTO thyristor are shown in Fig. 1.28.1.
2. It is seen from these characteristics that latching current for large power GTOs is several amperes (here 2A) as compared to 100-150 mA for conventional thyristors of the same rating.
3. If gate current is not able to turn on the GTO, it behaves like a high voltage, low again transistor with considerable anode current. This leads to a noticeable power loss under such conditions.

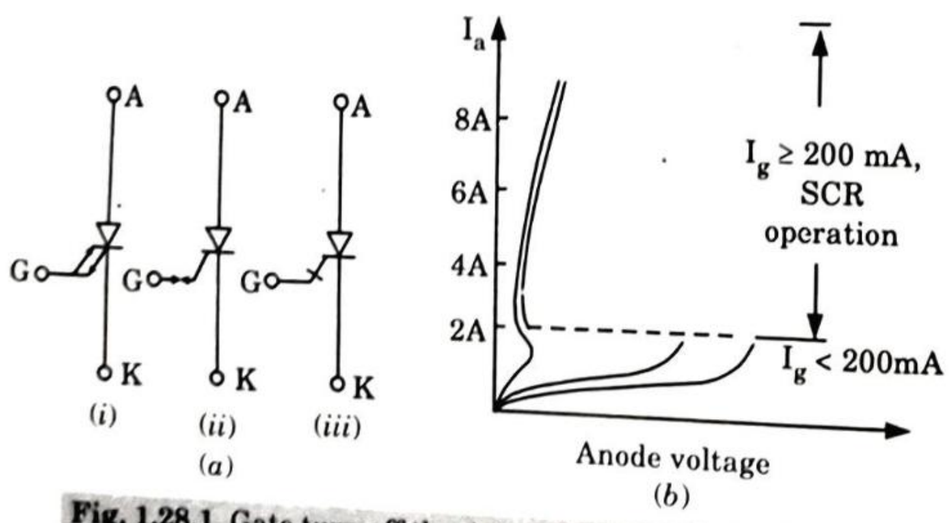

Fig. 1.28.1. Gate turn-off thyristor : (a) Cirucit symbol and (b) its static V-I characteristics.

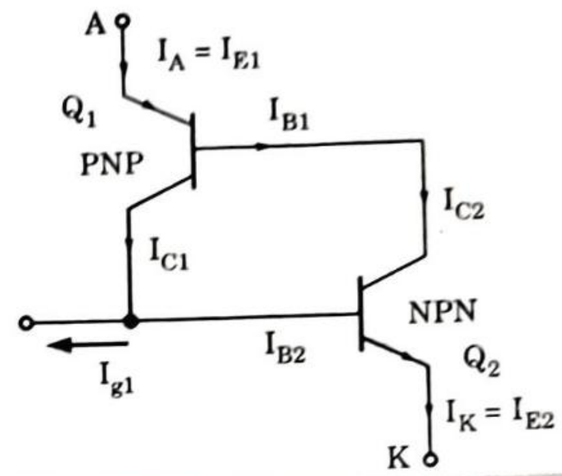

Fig. 1.28.2. Two transistor anology of GTO.

☺☺☺

Scanned by TapScanner

2 UNIT

Thyristor and DC-DC Converter

CONTENTS

Part-1 :	Rating and Protection	**2–2A to 2–7A**
Part-2 :	Methods of SCR Commutation	**2–7A to 2–16A**
Part-3 :	Gate Drive Circuit	**2–17A to 2–18A**
Part-4 :	Series and Parallel Operation	**2–18A to 2–23A**
Part-5 :	DC-DC Converters : Introduction and Control Strategies	**2–23A to 2–25A**
Part-6 :	Buck Converter, Analysis of Buck Converter	**2–25A to 2–27A**
Part-7 :	Boost Converter	**2–27A to 2–30A**
Part-8 :	Buck-Boost Converter	**2–30A to 2–31A**
Part-9 :	Switched Mode Power Supply (SMPS)	**2–32A to 2–33A**

PART-1

Rating and Protection.

Questions-Answers

Long Answer Type and Medium Answer Type Questions

Que 2.1. **Discuss different methods of protection of power devices.**

OR

What is the need of protective device in power electronics devices ? Explain the snubber circuit with the help of circuit diagram.

AKTU 2017-18, Marks 10

Answer

a. ***di/dt* Protection :** If the rate of rise of anode current is very fast compared with the spreading velocity of a turn on process a localised "hot-spot" heating may occur. The *di/dt* is limited by adding a series inductor *L*.

b. ***dv/dt* Protection :**

1. If the rise of forward voltage is high, the charging current *i* will be more and it will turn on the thyristor even when gate signal is zero, leading to false operation of the thyristor circuit.
2. The *dv/dt* can be limited by connecting capacitor *C*. When thyristor is ON, discharge current is limited by resistor *R*. This *RC* circuit is called snubber circuit.
3. The charging current $i = \frac{dq}{dt} = \frac{d}{dt}(C_j V_a) = C_j \frac{dV_a}{dt} + V_a \frac{dC_j}{dt}$ at C_j. The capacitance of junction J_2, is almost constant, then $i = C_j \frac{dV_a}{dt}$.
4. If the rate of rise forward voltage $\frac{dV_a}{dt}$ is high, the charging current *i* will be more.
5. This charging current plays the role of gate current and turns ON the SCR even when gate signal is zero, such phenomenon of turning on a thyristor, called $\frac{dv}{dt}$ turn-ON must be avoided as it leads to false operation of the thyristor circuit.

Scanned by TapScanner

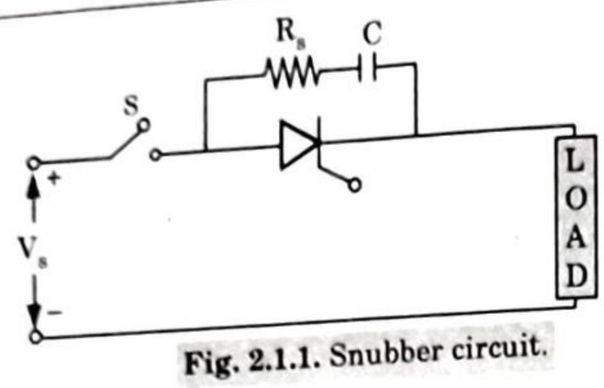

Fig. 2.1.1. Snubber circuit.

c. **Overvoltage protection :**

1. SCR is subjected to the internal and external overvoltages. To suppress the effect of overvoltage, voltage clamping device or resistor (VCD and VCR) is connected in parallel.
2. The resistance decreases as voltage increases hence they behave as open circuit in normal voltage condition and short circuit in high voltage condition.

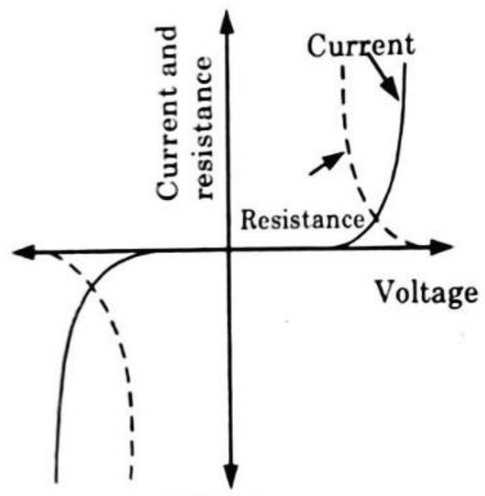

Fig. 2.1.2.

d. **Over current protection :**

1. It is provided by using over current relays or fuses or electronic crowbar protection. Crowbar thyristor possesses high surge current capability.
2. When the current in the circuit reaches the safe value, voltage exceeds across sensing resistor, so gate circuit turn ON the crowbar thyristor instantly thus protecting the circuit.

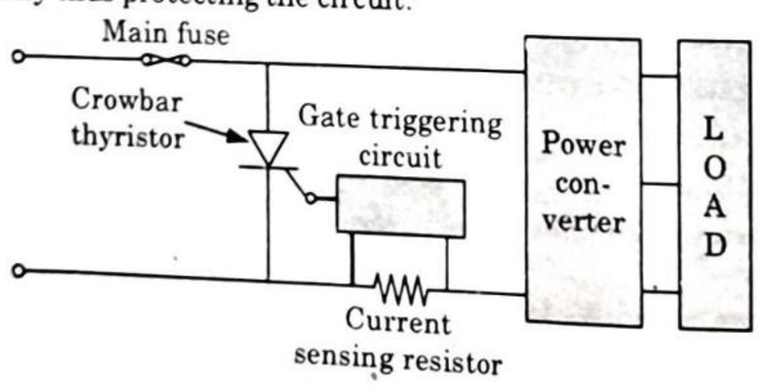

Fig. 2.1.3.

e. **Gate protection :** Stabilized gate voltage is obtained using Zener diode while R_1 and C_1 are used as a filter.

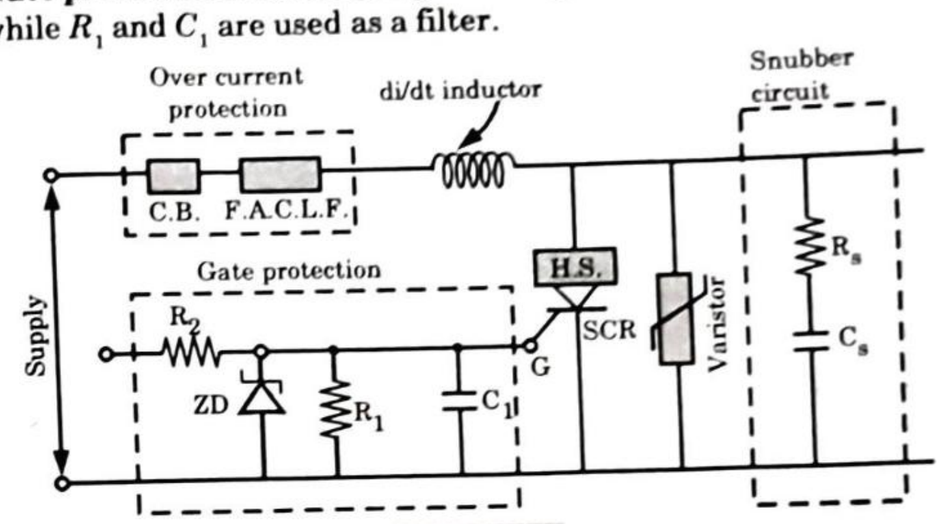

Fig. 2.1.4.

Que 2.2. List specifications of power electronic switches.

AKTU 2013-14, Marks 05

Answer

i. **Voltage ratings :** Forward and reverse repetitive peak voltages, and ON-state forward voltage drop.

ii. **Current ratings :** Average, root-mean-square (rms), repetitive peak, non-repetitive peak and off-state leakage currents.

iii. **Switching speed or frequency :** Transition from a fully non-conducting to a fully conducting state (turn-ON) and from a fully conducting to a fully non-conducting state are very important parameters.

iv. ***di/dt* rating :** The device needs a minimum amount of time before its whole conducting surface comes into play in carrying the full current.

v. ***dv/dt* rating :** A semiconductor device has an internal junction capacitance C_j. If the voltage across the switch changes rapidly during turn-ON, turn-OFF and also while connecting the main supply, the initial current $C_j \frac{dv}{dt}$ flowing through C_j may be too high, thereby causing damage to the device.

vi. **Gate-drive requirements :** The gate-drive voltage and current are important parameters to turn-ON and turn-OFF a device. The gate-drive power and energy requirements are very important parts of the losses and total equipment cost.

vii. ***I²t* for fusing :** This parameter is needed for fuse selection. The I^2t of the device must be less than that of the fuse so that the device is protected under fault current conditions.

Scanned by TapScanner

Que 2.3. **Explain important current and voltage rating of thyristor.**

Answer

A. **Current rating :** The current flow through the SCR increase the junction temperature. The excess current flow may exceed the permissible junction temperature and damage the device. Hence the current should not exceed the rated value. The various current ratings are :

1. **Average current rating (I_T) :** The average current rating is the maximum repetitive average current that can flow through the SCR. The power loss in the SCR depends upon average current flowing through it.
2. **RMS current rating (I_{TR}) :** The rms current rating is the maximum repetitive rms current that can flow through the SCR. The RMS current rating is same as average current rating for DC current.
3. **Surge current rating (I_{TSM}) :** The surge current rating is the peak amplitude of the surge current that the SCR can withstand only limited number of time in its life cycle.
4. **i^2t rating :** The i^2t rating is the measure of thermal energy that the device can absorb for a short period of time. Whenever fault occurs, the fast acting fuse clears such fault.
5. **$\frac{di}{dt}$ rating :** The $\frac{di}{dt}$ rating specifies maximum allowable rate of change of current through the device.

B. **Voltage rating :** The SCR blocks the forward and reverse voltages. The voltage ratings mainly specify the maximum allowable voltages those the device can withstand without damaging the junctions.

1. **Peak repetitive forward blocking voltage (V_{DRM}) :** This is the maximum voltage that the SCR can block in the forward direction.
2. **Peak repetitive reverse voltage (V_{RRM}) or Peak inverse voltage (*PIV*) :** This is the maximum voltage that the device can withstand repetitively is the reverse blocking state.
3. **Non-repetitive peak reverse voltage (V_{RSM}) :** This the maximum transient voltage that the device can safely withstand in the reverse direction. This transient is not repetitive. The device is damaged if transient is exceeded or it occurs repetitively.
4. **$\frac{dv}{dt}$ rating :** The $\frac{dv}{dt}$ rating specifies maximum allowable rate of change of forward voltage that the device can withstand in forward direction.

Que 2.4. **On what factors does the *di/dt* rating of a thyristor depend ? What device techniques are used to improve the *di/dt* rating ?** **AKTU 2016-17, Marks 10**

Answer

A. **Factors on which *di/dt* rating depend :**

1. The level of gate current used to trigger the thyristor.

B. **Techniques used to improve *di/dt* rating :**

1. Using amplifying gate thyristor.
2. Using hard drive gate circuit.

Que 2.5. **For the circuit shown in Fig. 2.5.1 the operating frequency is 2 kHz and the required *dv/dt* is 100 V/μm. If the discharge current be limited to 100 A, then calculate :**

i. The value of R_s and C_s.

ii. The power loss in the snubber.

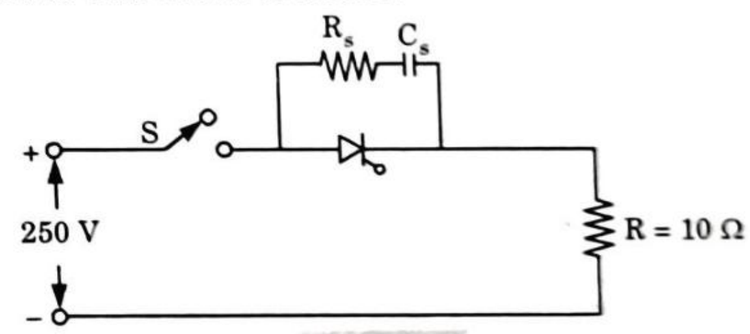

Fig. 2.5.1.

Answer

Given : $\frac{dv}{dt}$ =100 V/μm, I_{TD} = 100 A, R = 10 Ω, and V_s = 250 V

To Find : C_s, R_s and power loss.

1.
$$v_s = (R_s + R)i + \frac{1}{C_s}\int i\,dt + v_c(t = 0)$$

$$V_c(t = 0) = 0$$

Putting,

$$i(t) = \frac{V_s}{R_s + R}e^{-t/\tau}$$

$$\tau = (R_s + R)C_s$$

$$V_T(t) = V_s - \frac{RV_s}{R_s + R}e^{-t/\tau}$$

Scanned by TapScanner

2. At $t = 0$, $V_T = 0 = V_s - \dfrac{RV_s}{(R_s + R)}$

and at $t = t$, $V_T(t) = V_s - \dfrac{RV_s}{(R_s + R)} \times 0.368$

$$\frac{dv}{dt} = \frac{V_T(\tau) - V_T(0)}{\tau} = \frac{0.632RV_s}{C_s(R_s + R)^2} \quad ...(2$$

3. R_s is given by :

$$R_s = \frac{V_s}{I_{TD}}$$

$$R_s = \frac{250}{100} = 2.5\ \Omega$$

4. From eq. (2.5.1), we get

$$C_s = \frac{0.632 \times 10 \times 250 \times 10^{-6}}{(2.5 + 10)^2 \times 100} = 0.101\ \mu F$$

5. Power loss in the snubber is given by :

$$P_s = 0.5\, C_s\, V_s^2 f_s$$
$$= 0.5 \times 0.101 \times 10^{-6} \times 250^2 \times 2000$$
$$= 6.3125\ W$$

PART-2

Methods of SCR Commutation.

CONCEPT OUTLINE

- **Commutation :** Commutation is defined as the process of turning-off a thyristor.
- Types of commutation techniques :

i. Class A commutation (Load commutation)
ii. Class B commutation (Resonant-Pulse commutation)
iii. Class C commutation (Complementary commutation)
iv. Class D commutation (Impulse commutation)
v. Class E commutation (External Pulse commutation)
vi. Class F commutation (Line commutation)

Questions-Answers

Long Answer Type and Medium Answer Type Questions

B C, D

Que 2.6. **Explain class B commutation or resonant pulse commutation.**

Answer

Class B commutation (Resonant-pulse commutation) :

1. It is also known as current commutation or resonant-pulse commutation.
2. Let us suppose that the capacitor is charged with $V_c = V_s$ volts with polarity as shown in Fig. 2.6.1(*a*).
3. Let T_1 (main thyristor) be conducting initially assuming load current as constant. T_A (auxiliary thyristor) will initiate the commutation process when it is ON and T_1 (OFF). L, C, D, T_A all are commutating elements.
4. $$I_m = I_p \sin \omega t$$
$$I_p = V_s\sqrt{\frac{C}{L}}$$
5. For t_2

at $\omega_o = t_2$

$$I_{tM} = I_o - I_c$$

when $I_o = I_c$

$$I_c = I_p \sin \omega_o t \quad (T_1 \rightarrow \text{OFF})$$

$$\omega_o t = \sin^{-1}\left(\frac{I_o}{I_p}\right)$$

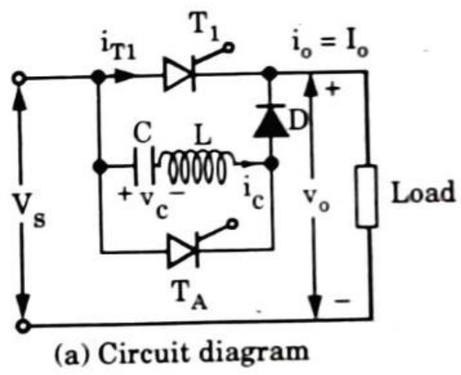

(a) Circuit diagram

Scanned by TapScanner

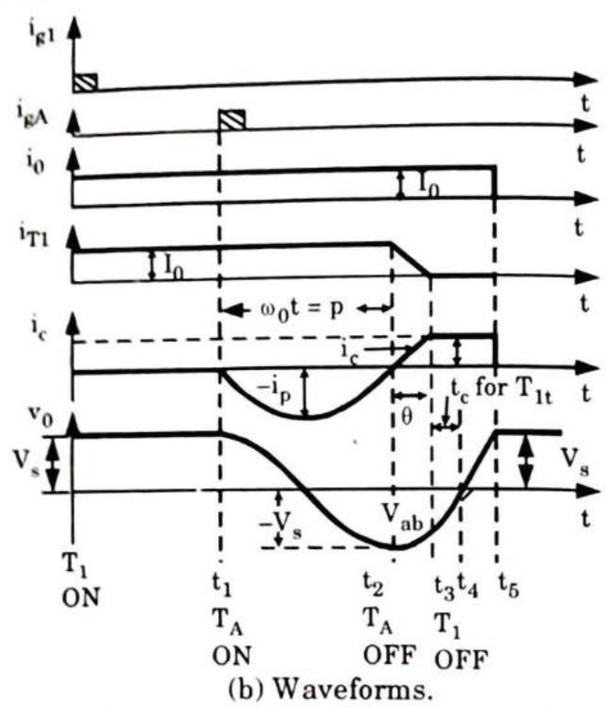

(b) Waveforms.

Fig. 2.6.1. Resonant-pulse commutation.

6. Conducting time of $T_A = \pi\sqrt{LC}$ sec

$$(I_{TA})_{peak} = I_p = V_s\sqrt{\frac{C}{L}}$$

7. When T_A becomes off T_1 will be turn off

$$t = \frac{1}{\omega_o}\sin^{-1}\left(\frac{I_o}{I_p}\right)$$

$$t_3 - t_2 = t = \frac{1}{\omega_o}\sin^{-1}\left(\frac{I_o}{I_p}\right)$$

8. Total time required for main thyristor to become OFF after auxili thyristor T_A is ON (after initiating the commutation process)

$$= \pi\sqrt{LC} + \sqrt{LC}\sin^{-1}\left(\frac{I_o}{I_p}\right)$$

9. The minimum time required to turn off the main thyristor (T_1)

$$= \pi\sqrt{LC}$$

10. The reverse voltage across the main thyristor when it is off

$$V_{KT1} = V_s\cos\left[\sin^{-1}\left(\frac{I_o}{I_p}\right)\right]$$

11. Circuit turn off time of main thyristor

$$T_{C1} = \frac{CV_{KT1}}{I_o}$$

12. Inertia depends upon time. It will not suddenly change. If two devices are connected in antiparallel then only one will conduct at a time. Diode D_1 will conduct only when T_1 is OFF. Voltage of one *i.e.* T_1 or D_1 makes other reverse biased.

13. Conduction time of diode, $i_c = i_{D1} + I_o$

$$i_{D1} = i_c - i_o$$

D_1 = Circuit turn off time of T_1

$$= \pi\sqrt{LC} - 2t = \pi\sqrt{LC} - \frac{2}{\omega_o}\sin^{-1}\left(\frac{I_o}{I_p}\right)$$

$$= \pi\sqrt{LC} - 2\sqrt{LC}\sin^{-1}\left(\frac{I_o}{I_p}\right)$$

Que 2.7. **Explain the resonant pulse commutation with the help of circuit diagram and waveforms. Explain the effect of accelerating diode.**

AKTU 2014-15, Marks 10

Answer

A. **Resonant pulse commutation :** Refer Q. 2.6, Page 2–8A, Unit-2.

B. **Effect of accelerating diode :** In resonant pulse commutation, the capacitor is charged / discharged with constant load current I_0. Hence current turn off is independent on the load current. This problem can be avoided by connecting accelerating diode.

Que 2.8. **Discuss different commutation techniques in thyristor.**

OR

Explain the need of commutation in thyristor circuits. What are the different methods of commutation ? Explain any one of them with the help of neat and clean schematic and waveforms.

AKTU 2016-17, Marks 10

Answer

1. **Need of commutation :** Thyristor can be turned on by gate signal but can't be turned off. So to turn off thyristor when required we use commutation techniques.

2. **Classification of commutation techniques in thyristor :**

A. **Natural commutation :** Natural commutation occurs when supply is AC. It includes the class F commutation.

Scanned by TapScanner

1. Class F commutation :

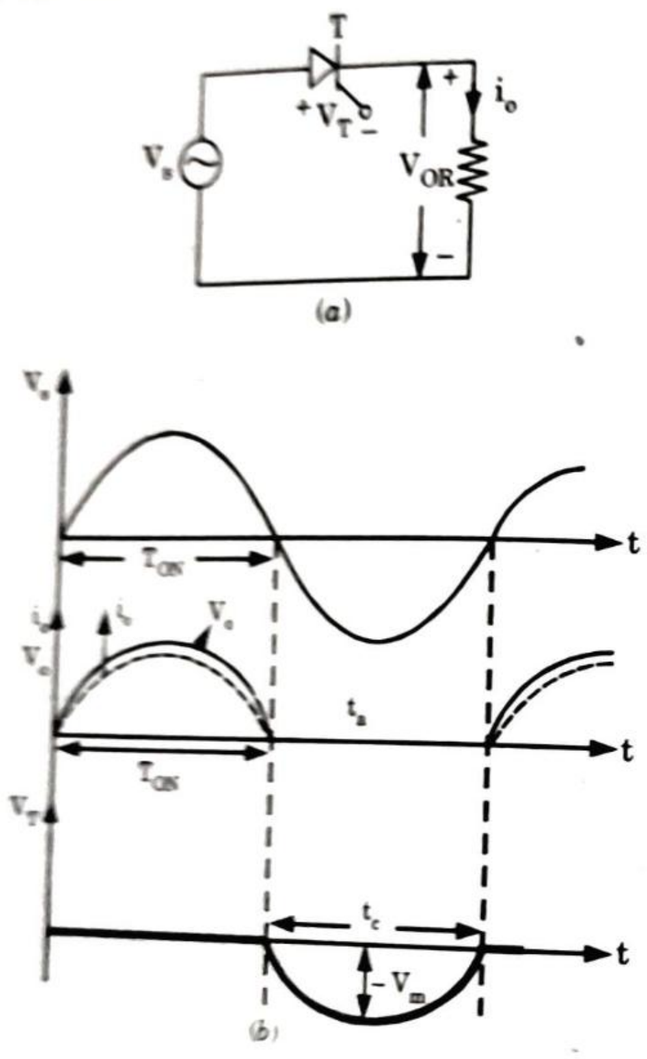

Fig. 2.8.1.

i. The circuit turn off time depends on the nature of the supply.

t_q (device turn off time) < t_c (circuit turn off time).

ii. The circuit turn off time is a period during which SCR is reverse biased when the SCR is commutated. The nature of supply initiates commutation process without any extra commutation circuit.

B. Forced commutation technique : When the supply is DC for the main circuit the anode current never becomes zero at any time. The commutation circuit forces the anode current to bring down to zero and initiates the turn-off process.

Types of forced commutation :

i. Class A commutation or Load commutation (resonant, or self) :

1. For achieving load commutation of a thyristor, the commutating components L and C are connected as shown in Fig. 2.8.2(*a*).
2. For low value of R, L and C, they are connected in series. For high value of R, load R is connected across C, Fig. 2.8.2(*b*).

3. The essential requirement for both the circuits of Fig. 2.8.2 is that the overall circuit must be underdamped.
4. The nature of the circuit should be such that when energized from a DC source, current must have a natural tendency to decay to zero for the load commutation to occur in a thyristor circuit. Load commutation is possible in DC circuits and not in AC circuits.

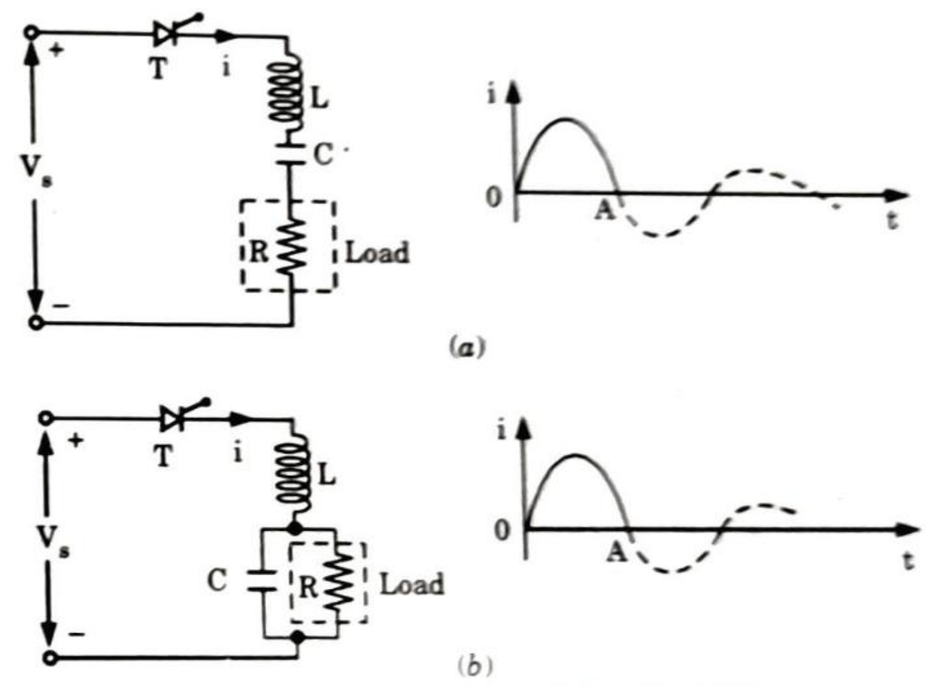

Fig. 2.8.2. Class A or load commutation : (*a*) series capacitor and (*b*) shunt capacitor.

ii. Class B commutation : Refer Q. 2.6, Page 2–8A, Unit-2.

iii. Class C commutation (Complementary commutation) :

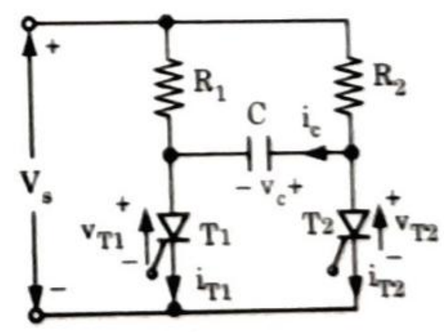

Scanned by TapScanner

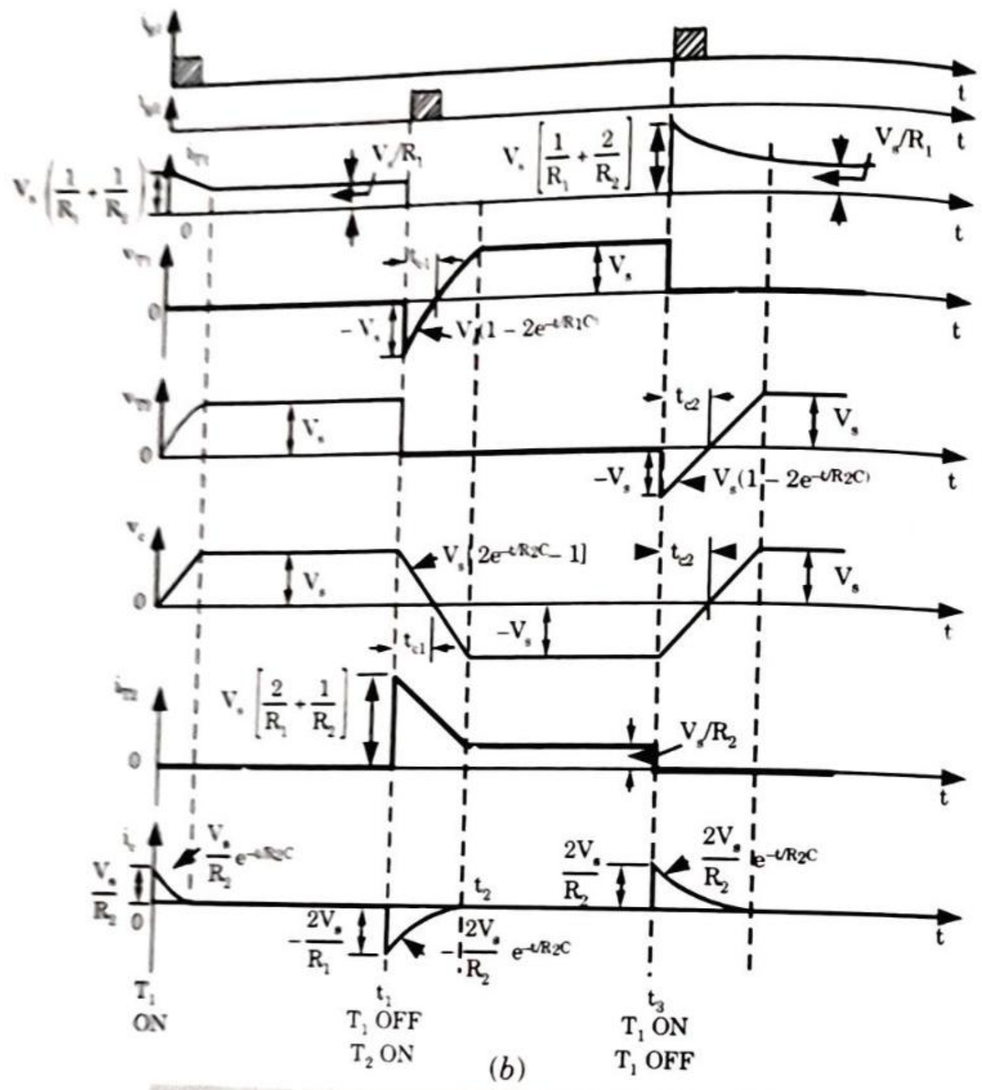

Fig. 2.8.3. Class-C commutation :
(*a*) Circuit diagrams and (*b*) Waveforms.

1. Here R_1 and R_2 are two parallel load connected in series with T_1 and T_2. Here only one load remains in the ON state and other remain in OFF state at any time.
2. Assume capacitor is charge with $V_c = V_s$ as per the polarity shown in Fig. 2.8.3(c).
3. Let us assume T_2 is in on state and T_1 is in off state at $t = t_1$ sec.

Before $t = 0$ sec,
$T_1 \rightarrow$ ON

$$I_{T1} = I_1 + I_C$$

$$I_{T1}(\text{on}) = \frac{V_s}{R_1} + \frac{2V_s}{R_2} e^{-t/R_2C}$$

$$I_{T1}(\text{peak}) = \frac{V_s}{R_1} + \frac{2V_s}{R_2}$$

$$= V_s\left[\frac{1}{R_1} + \frac{2}{R_2}\right]$$

4. Peak value of current passing through,

$$T_1 = V_s\left[\frac{1}{R_1} + \frac{2}{R_2}\right]$$

5. Peak value of current passing through,

$$T_2 = V_s\left[\frac{2}{R_1} + \frac{1}{R_2}\right]$$

6. Voltage across capacitor is,

$$V_C = V_s\left[2e^{-t/R_2C} - 1\right]$$

7. Circuit turn-off time for,

$$T_2(\text{off}) = V_s\left[2e^{-t_{c2}/R_2C} - 1\right]$$

$$t_{c2} = R_2 C \log(2)$$

$$I_{T2} = IR_2 + I_c$$

$$I_{T2}(\text{on}) = \frac{V_s}{R_2} + \frac{2V_s}{R_1} e^{-t/R_1C}$$

$$= V_s\left[\frac{1}{R_2} + \frac{2}{R_1} e^{-t/R_1C}\right]$$

$$I_{T2}(\text{peak}) = V_s\left[\frac{2}{R_1} + \frac{1}{R_2}\right]$$

$$I_{T1}(\text{peak}) = V_s\left[\frac{1}{R_1} + \frac{2}{R_2}\right]$$

8. Circuit turn-off time for T_1

$$t_{c1} = R_1 C \log(2)$$

$$t_{c2} = R_2 C \log(2)$$

9. For successful commutation

$$t_c > t_q$$

$$t_c = (\text{SF})\, t_q \text{ and SF} > 1$$

Where, SF = Safety factor.
t_c = Circuit turn off time.
t_q = Device turn off time.

10. Here $C_1 = \dfrac{t_{c1}}{R_1 \log 2}$

and $C_2 = \dfrac{t_{c2}}{R_2 \log 2}$

11. If $t_{c1} = t_{c2}$

Scanned by TapScanner

$$C_1 = \frac{t_c}{R_1 \log 2}$$

and $$C_2 = \frac{t_c}{R_2 \log 2}$$

iv. Class D commutation :

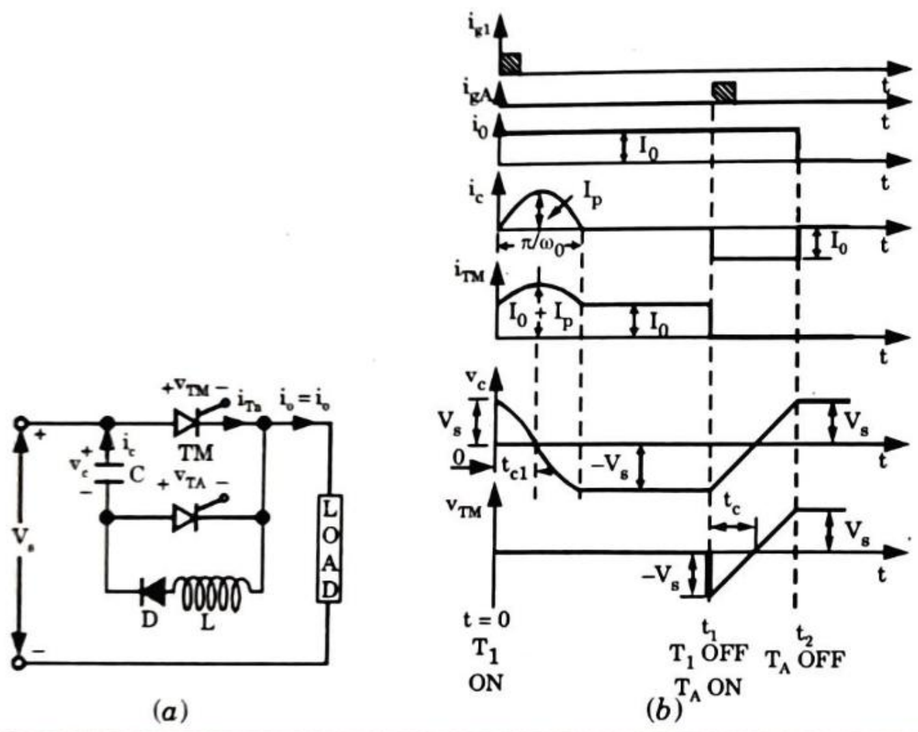

(a) (b)

Fig. 2.8.4. Class-D commutation : (*a*) circuit diagram and (*b*) waveforms.

1. $$I_{TM} = I_o + I_c = I_o + I_p \sin \omega_o t$$

2. $$I_{TM} \text{ peak} = I_o + I_p = I_o + V_s\sqrt{\frac{C}{L}}$$

3. Assume the capacitor is initially charged with polarity V_s volts assume constant load current.

   Let main thyristor be turn on circuit $t = 0$ sec.

4. Circuit turn off time for the main thyristor

$$t_{CM} = \frac{CV_s}{I_o} \text{ sec}$$

5. Circuit turn off time for auxiliary thyristor

$$t_{CA} = \frac{\pi}{2}\sqrt{LC} \text{ sec.}$$

6. It becomes *RC* circuit exponentially decreasing and increasing for *R* load

$$i_c = \frac{2V_s}{R} e^{-t/RC}$$

v. Class E commutation :

1. Here capacitor acts a short circuit for high frequency external pulse and acts as a open circuit for low frequency (DC supply).
2. The turn off process is initiated by external pulse generator. When an external pulse of high frequency is applied to turn off the SCR it will apply reverse voltage through the capacitor and transformer and hence SCR becomes off.

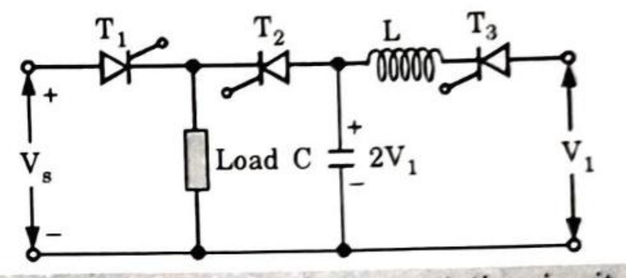

Fig. 2.8.5. External-pulse commutation circuit.

Que 2.9. **A complementary commutation circuit operates from a DC supply of 200 volts and has resistance $R_1 = R_2 = 10\ \Omega$, commutating capacitor $C = 10\ \mu F$. Sketch the thyristor voltage waveform for one complete cycle of operation, when the two thyristors T_1 and T_2 in the circuit are triggered periodically one after the other. Calculate :**

i. Peak transient repetitive on state thyristor current that flows, at the instant of triggering the thyristor device

ii. The circuit turn-off time. **AKTU 2013-14, Marks 10**

Answer

Given : $V_s = 200$ volt, $R_1 = R_2 = 10\ \Omega$, $C = 10\ \mu F$.
To Find : I_{T1} and t_c.

i. Peak value of current through T_1

$$I_{T1} = V_s\left[\frac{1}{R_1} + \frac{2}{R_2}\right] = 200\left[\frac{1}{10} + \frac{2}{10}\right] = 200 \times \frac{3}{10} = 60 \text{ A}$$

$\because \quad R_1 = R_2 = 10\ \Omega$

Then peak value of current through $T_2 = 60$ A

ii. The circuit turn-off time

$$t_{cn} = R_n\, C \log_e(2)$$

For, $n = 1$ $\quad R_1 = R_2 = 10\ \Omega$

$$t_c = 10 \times 10 \times 10^{-6} \times \log_e(2) = 69.31\ \mu \text{ sec.}$$

Thyristor voltage waveform : Refer Q. 2.8, Page 2–10A, Unit-2.

Scanned by TapScanner

PART-3

Gate Drive Circuit.

Questions-Answers

Long Answer Type and Medium Answer Type Questions

Que 2.10. **Discuss the typical gate drive circuit that is used for a thyristor.**

Answer

1. A typical pulse amplifier circuit, also called a drive circuit, is shown in Fig. 2.10.1(*a*).

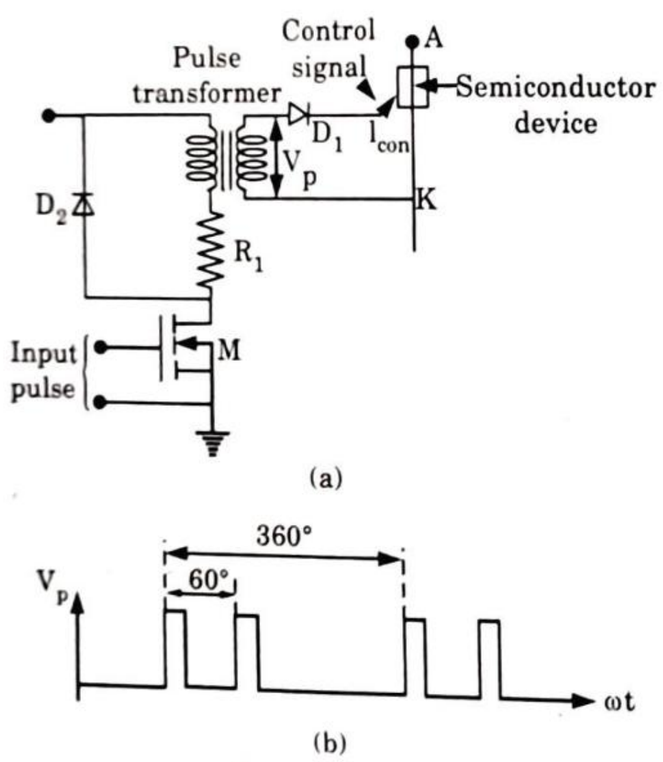

Fig. 2.10.1.

2. The input pulse, which is obtained from a typical firing angle module, turns ON the MOSFET *M*, which in turn supplies an amplified gate current pulse to the thyristors through the pulse transformer.
3. The diode D_1 is necessary to prevent the negative gate current pulse caused by the transformer magnetizing current when the MOSFET *M* turns off.

4. The diode D_2 provides a path for the transformer magnetizing current, so as to dissipate the energy in the magnetic core by means of the resistance R_1.
5. Six such circuits are needed for a three-phase, full-wave bridge converter, and the six thyristors in this converter are fired in sequence with an interval of 60° between any two thyristors.
6. At the moment of starting and also when current is discontinuous, two thyristors, one from the top group and one from the bottom group, have to be fired.
7. The six pairs thus selected are to be fired with intervals of 60°, as shown in Fig. 2.10.1(*b*).

PART-4

Series and Parallel Operation.

Questions-Answers

Long Answer Type and Medium Answer Type Questions

Que 2.11. **Explain the problem associated with the series operation of thyristors.**

OR

Explain the dynamic equalizing circuit for series connected SCRs.

AKTU 2016-17, Marks 10

OR

Why does unequal sharing takes place among series connected SCRs during steady state and dynamic state ? Draw the static and dynamic equalizing circuits for two series connected SCRs.

AKTU 2015-16, Marks 10

Answer

Steady state :

1. When system voltage is more than the voltage rating of a single thyristor, SCRs are connected in series in a string. These SCRs should have their *V-I* characteristics as close as possible.
2. In case of variations in their characteristics, the voltage shared by each SCR may not be equal. So, consider two SCRs with their static *V-I* characteristics as shown in Fig. 2.11.1.

Scanned by TapScanner

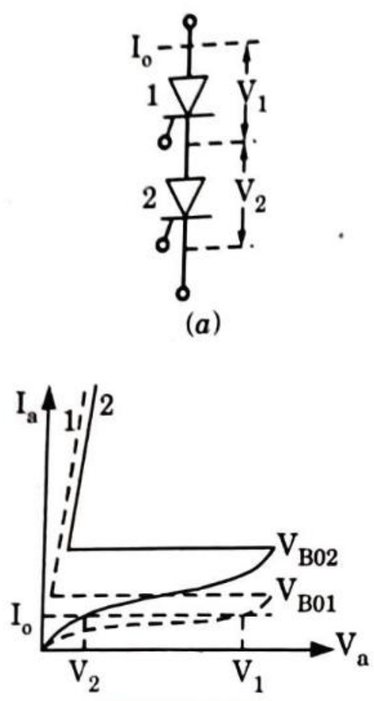

Fig. 2.11.1.

3. The string efficiency for two series connected SCRs of Fig. 2.11.1(*a*) is

$$\eta = \frac{V_1 + V_2}{2V_1} = \frac{1}{2}\left(1 + \frac{V_2}{V_1}\right)$$

This shows that even though SCRs have identical ratings, voltage shared by each is not the same.

4. A uniform voltage distribution in steady state can be achieved by connecting a suitable resistance across each SCR such that each parallel combination has the same resistance (R). This shunt resistance R is called the static equalizing circuit.

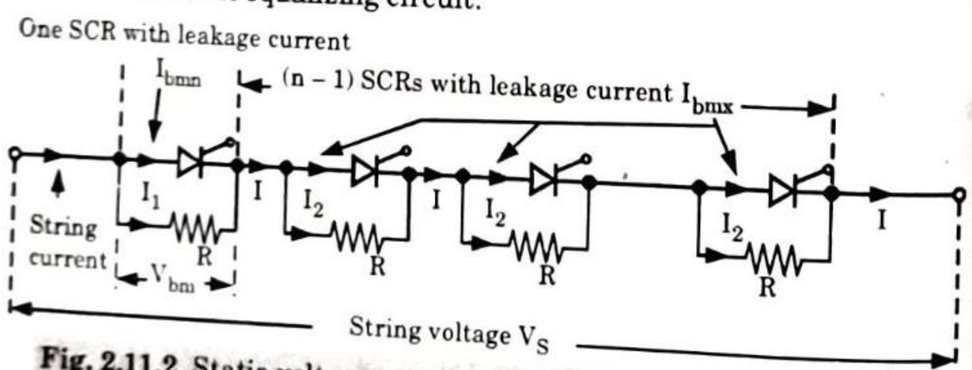

Fig. 2.11.2. Static-voltage equalization for series-connected string.

5. The value of this resistance R can be obtained as

$$I_1 = I - I_{bmn} \text{ and } I_2 = I - I_{bmx}$$

where, I = Total string current

$$V_{bm} = I_1 R$$

$$V_S = I_1 R + (n-1) R I_2 = V_{bm} + (n-1) R(I - I_{bmx})$$

$$= V_{bm} + (n-1) R[I_1 - (I_{bmx} - I_{bmn})]$$

$$= V_{bm} + (n-1) R I_1 - (n-1) R \Delta I_b$$

$$V_S = n V_{bm} - (n-1) R \Delta I_b$$

$$R = \frac{n V_{bm} - V_s}{(n-1) \Delta I_b}$$

Dynamic State :

1. SCRs do not have identical dynamic characteristics. Series-connected SCRs will have unequal voltage distribution during the transient conditions of turn-on, turn-off and high frequency operation.
2. A simple resistor for static voltage equalization cannot maintain equal voltage distribution under transient condition. Thus the voltage distribution during turn-on and turn-off periods would be unequal. So, this is achieved by employing shunt capacitors as shown Fig. 2.11.3.
3. During turn-on and turn-off periods, the resultant of shunt capacitances and self-capacitance of each SCR tends to be equal for each of the series connected SCRs.
4. When any SCR is in the forward blocking state, the capacitor connected across it gets charged to a voltage existing across that SCR.
5. When this SCR is turned on, capacitor discharges heavy current through that SCR. For limiting this discharge current spike, a damping resistance R_C is used in series with capacitor C as shown Fig. 2.11.3.

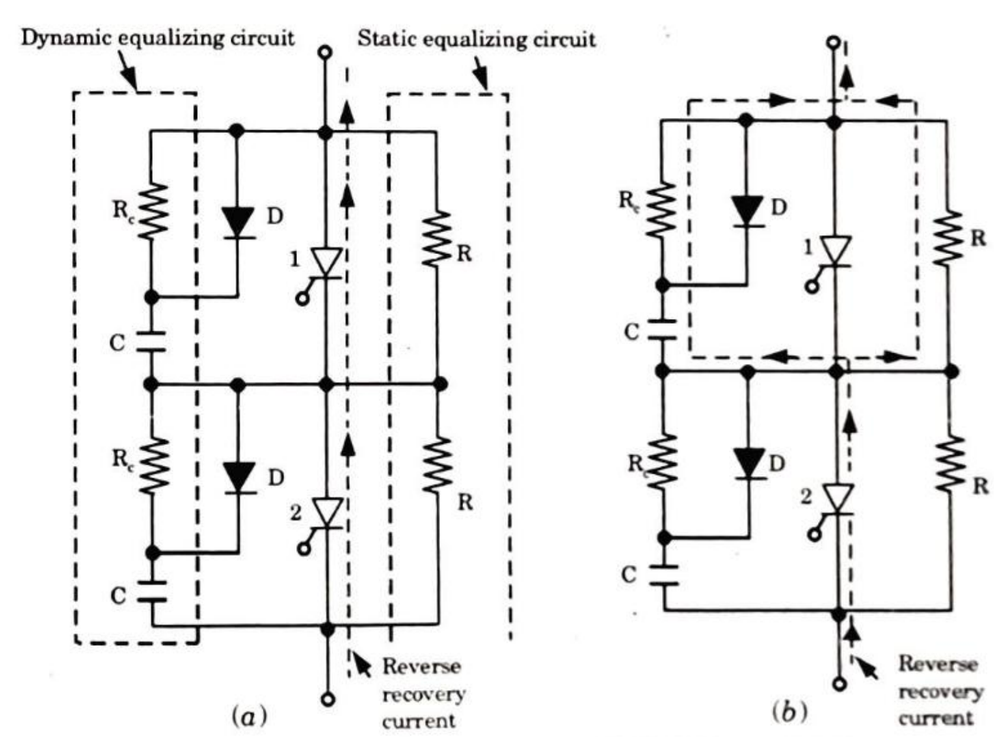

Fig. 2.11.3. Dynamic and static equalizing circuits for series-connected SCRs.

Scanned by TapScanner

6. The combination of R_c and C is called the dynamic equalizing circuit. diode D is also placed across R_c. When forward voltage appears, diode bypasses R_c during charging time of the capacitor C.

Que 2.12. Explain parallel operation of thyristor.

Answer

1. When current required by the load is more than the rated current of single thyristor, SCRs are connected in parallel as a string. For equal sharing of current, V-I characteristics of SCRs during forward conduction must be identical as far as possible.

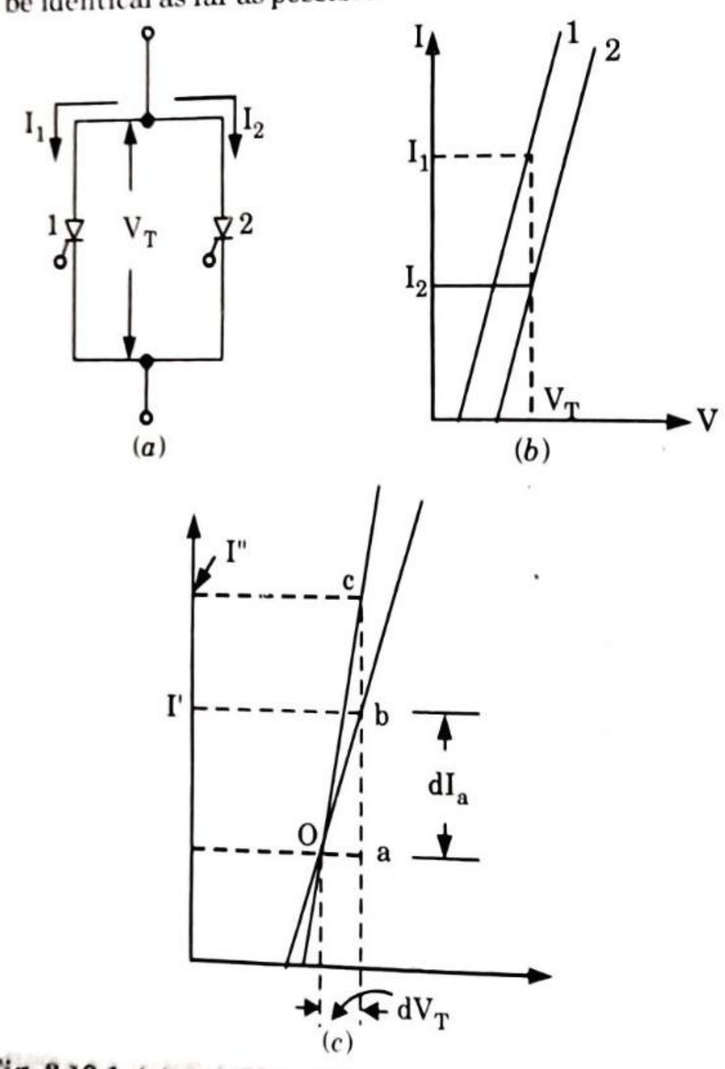

Fig. 2.12.1. (*a*) and (*b*) Parallel operation of two thyristors, (*c*) Dynamic resistance decreases as junction temperature rises.

2. In this Fig. 2.12.1, two SCRs are in parallel and their characteristics during forward conduction mode.
3. In parallel-connected SCRs voltage drop V_T must be equal. SCR_1 shares a rated current I_1, whereas SCR_2 carries current I_2 much less than the rated current I_1.

4. If SCR_1 in a parallel unit carries more current than other SCRs, then this SCR_1 will have greater junction temperature rise.
5. Due to this anode current rise becomes cumulative and subsequently the junction temperature of SCR_1 exceeds its rated value; as a result SCR_1 is damaged.
6. Therefore, when SCRs are to be operated in parallel, it should be ensured that they operate at the same temperature. This is achieved by mounting the parallel unit on one common heat sink.

Que 2.13. Find the number of thyristors each with a rating of 500 V and 75 A required for each branch of a series parallel combination for a circuit for a total voltage and current rating of 7.5 kV and 1 kA. Assume de-rating factor of 15 %.

AKTU 2014-15, Marks 05

Answer

Given : V = 7.5 kV, I = 1kA and de-rating factor = 15 %

To Find : n_p and n_s.

1. De-rating factor = 1 – String efficiency

$$0.15 = 1 - \frac{7500}{n_s \times 1000}$$

$$0.15 = 1 - \frac{75}{10n_s}$$

$$\frac{75}{10n_s} = 0.85$$

$$n_s = \frac{75}{10 \times 0.85}$$

$$n_s = 8.82 \text{ or } 9$$

Hence number of series connected SCRs = 9

2. Number of parallel connected SCRs,

$$n_p = \frac{1000}{75 \times (1 - 0.15)}$$

$$= \frac{1000}{75 \times 0.85} = 15.68 \text{ or } 16$$

Hence, number of SCRs connected in parallel = 16

Scanned by TapScanner

Que 2.14. **The voltage and current ratings in a particular circuit are 5 kV and 100 A. Thyristors with ratings of 1000 V and 150 A are available. Minimum derating factor is 20 %. Calculate the number of series connected thyristors required to handle the given source voltage and current.** **AKTU 2013-14, Marks 05**

Answer

The procedure is same as Q. 2.13, Page 2–22A, Unit-2.
(**Ans.** Number series connected thyristor = 13)

PART-5

DC-DC Converters : Introduction and Control Strategies.

CONCEPT OUTLINE

- **DC Chopper :** A chopper is a static device that converts fixed DC input voltage to a variable DC output voltage directly.

Questions-Answers

Long Answer Type and Medium Answer Type Questions

Que 2.15. **What is DC-DC converter ? And also give types to convert DC to variable DC.**

Answer

The conversion of fixed DC voltage to an adjustable DC output voltage, through the use of semiconductor devices is called DC-DC converter.

There are two types DC to DC converters :

i. **AC link chopper :**

1. In AC link chopper DC is first converted into AC by inverter.
2. AC is then step-up or step-down by a transformer which is then converted back to DC by a diode rectifier.
3. This conversion is in two stages, first DC to AC and second AC to DC, so AC link chopper is costly bulky and less efficient.

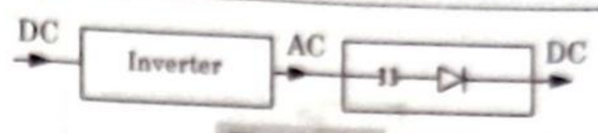

Fig. 2.15.1.

ii. **DC chopper :** A chopper is a static device that converts fixed DC input voltage to a variable DC output voltage directly. Conversion process is completed in one stage, it is so more efficient.

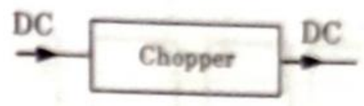

Que 2.16. **Write a short note on control strategies.**

Answer

The average output value (v_o) can be controlled through α by opening and closing the semiconductor switch periodically. The various control strategies for varying duty cycle α are as follows :

i. **Constant frequency system :** In this, ON time (T_{on}) is varied but chopping frequency (f) is constant. Variation of T_{on} means adjustment of pulse width, as this is also called pulse-width-modulation scheme. It is also called Time-Ratio control (TRC).

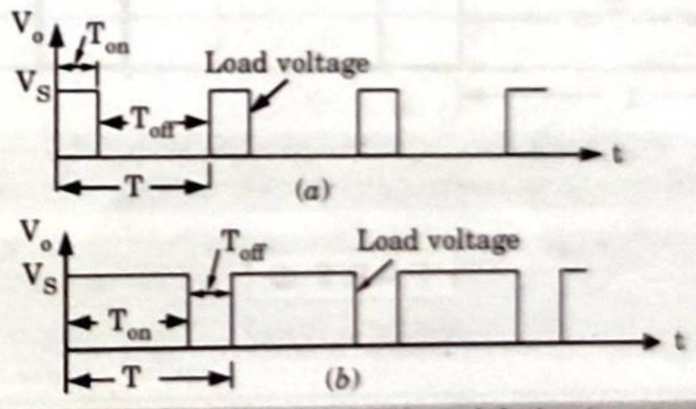

Fig. 2.16.1. Principle of pulse-width modulation (constant T).

ii. **Variable frequency system :** In this scheme, the chopping frequency (f) is varied and either

i. ON-time (T_{ON}) is kept constant or

ii. OFF-time (T_{OFF}) is kept constant.

This method of controlling α is also called frequency modulation scheme.

Scanned by TapScanner

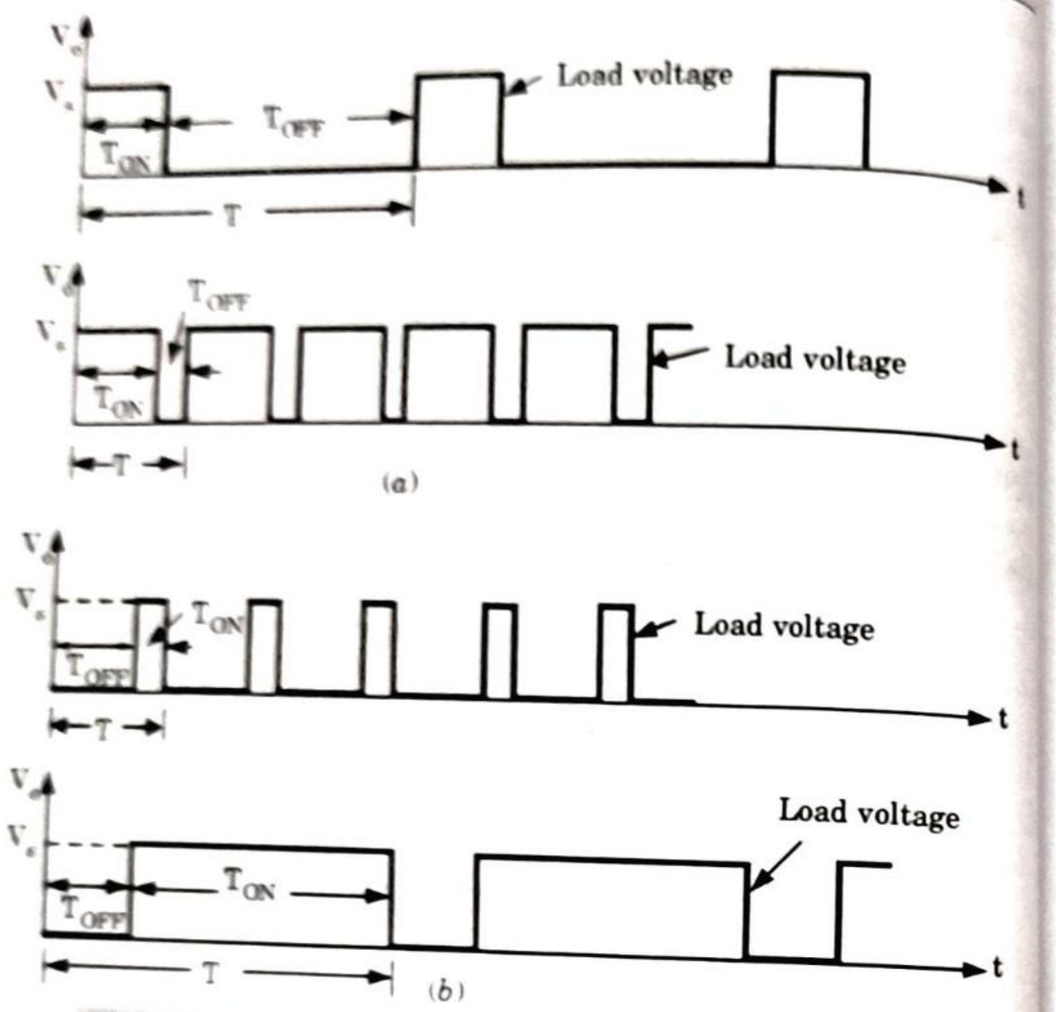

Fig. 2.16.1. Principle of frequency modulation : (*a*) ON-time (T_{ON}) constant and (*b*) off-time (T_{OFF}) constant.

PART-6

Buck Converter.

Questions-Answers

Long Answer Type and Medium Answer Type Questions

Que 2.17. **Explain the principle of operation of a step down chopper (Buck converter).**

Answer

1. Chopper consists of power semiconductor devices, input DC, power supply, element (R, L, C etc) and load (shown in Fig. 2.17.1).

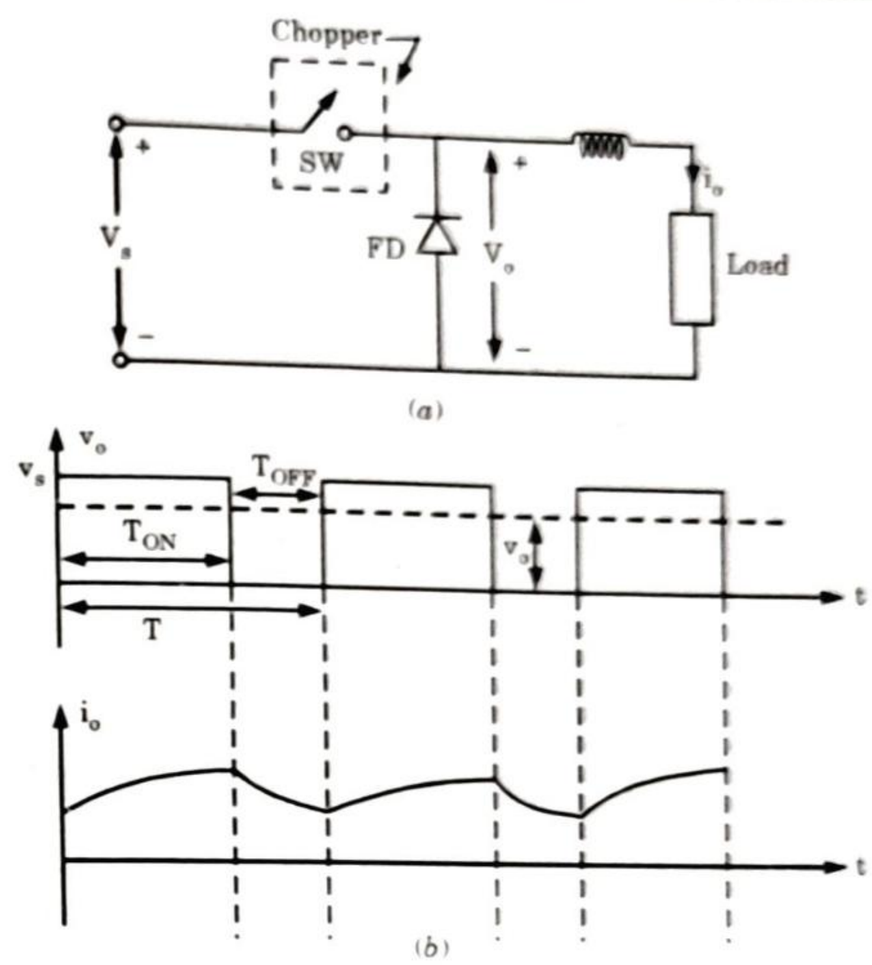

Fig. 2.17.1. (*a*) Buck converter circuit and (*b*) Output voltage and current waveforms.

2. Average output voltage across the load is controlled by varying ON-period and OFF-period of the switch.
3. During the turn on (T_{ON}) period, chopper is ON and load voltage is equal to source voltage.

   i.e., $V_o = V_s$
4. During turn OFF interval chopper is OFF, load current flows through the freewheeling diode. Then the load terminals are short circuited by freewheeling diode and load voltage is therefore becomes zero.
5. Then the average load voltage is

$$V_o = \frac{T_{ON}}{T_{ON} + T_{OFF}} V_s = \frac{T_{ON}}{T} V = \alpha V_s$$

where, T_{ON} = ON-time; T_{OFF} = OFF-time

$T = T_{ON} + T_{OFF}$ = Chopping period

$\alpha = \frac{T_{ON}}{T}$ = Duty cycle

Scanned by TapScanner

6. $$v_0 = fT_{ON}v_s$$

$$f = \frac{1}{T} = \text{Chopping frequency}$$

Average output voltage v_0 is less than the input voltage v_s, *i.e.*, $v_0 < v_s$, this configuration is called step-down chopper.

7. The rms value of output voltage,

$$v_0 = \left(\frac{1}{T}\int_0^{T_{ON}} v_0^2\, dt\right)^{1/2} = \sqrt{\frac{T_{ON}}{T}}\, v_s$$

$$v_0 = \sqrt{\alpha}\, v_s$$

PART-7

Boost Converter.

Questions-Answers

Long Answer Type and Medium Answer Type Questions

Que 2.18. **Explain the principal of operation of a step-up chopper (Boost converter). Also discuss its operation with *R-L* load.**

OR

Describe the principle of step-up chopper. Derive an expression for the average output voltage in terms of input DC voltage and duty cycle.

AKTU 2017-18, Marks 10

Answer

1. The chopper having average output voltage V_o greater than input voltage V_s, is called step-up chopper (boost converter).
2. A large inductor L in series with source voltage V_s is show in Fig. 2.18.1(*a*). When the chopper is ON, the closed current path is shown Fig. 2.18.1(*b*) and inductor stores energy during T_{ON} period.
3. When chopper CH is OFF, as the inductor current cannot die down instantaneously, the current is forced to flow through the diode.
4. The current tends to decrease, polarity of the emf induced in L is reversed. The voltage across the load, given by $V_o = V_s + L(di/dt)$, exceeds the source voltage V_s.

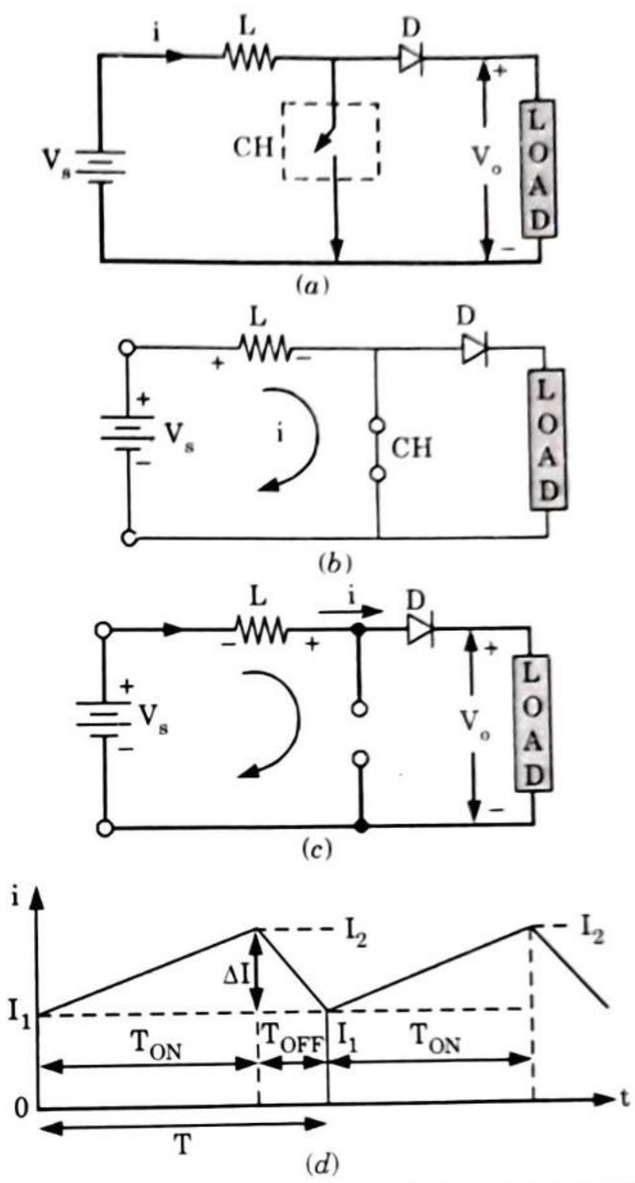

Fig. 2.18.1. (*a*) Step-up chopper, (*b*) *L* stores energy, (*c*) *L* di/dt is added to V_s and (*d*) current waveform.

5. The energy input to inductor from the source, during the period T_{ON},
W_{IN} = (Voltage across L) × (Average current through L) × T_{ON}

$$W_{IN} = V_s\left(\frac{I_1 + I_2}{2}\right)T_{ON} \quad ...(1.18.1)$$

6. During the time T_{OFF}, chopper is OFF, inductor released energy to load
W_{OFF} = (Voltage across L) × (Average current through L) × T_{OFF}

$$W_{OFF} = (V_o - V_s)\left(\frac{I_1 + I_2}{2}\right)T_{OFF} \quad ...(1.18.2)$$

7. $W_{IN} = W_{OFF}$, then

Scanned by TapScanner

$$V_s\left(\frac{I_1+I_2}{2}\right)T_{ON} = (V_o - V_s)\left(\frac{I_1+I_2}{2}\right)T_{OFF}$$

$$V_s T_{ON} = V_0 T_{OFF} - V_s T_{OFF}$$

$$V_0 T_{OFF} = V_s (T_{ON} + T_{OFF}) \qquad (\because T = T_{ON} + T_{OFF})$$

$$V_o = V_s \frac{T}{T_{OFF}} = V_s \frac{T}{T - T_{ON}}$$

$$\therefore \quad V_o = V_s \frac{1}{1 - \frac{T_{ON}}{T}} = V_s \frac{1}{1-\alpha} \qquad \left(\alpha = \frac{T_{ON}}{T}\right)$$

Que 2.19. **Describe the principle of step up chopper. Derive an expression for the average output voltage in terms of input voltage and duty cycle.**

A step up chopper has output voltage of two to four times the input voltage. For a chopping frequency of 2000 Hz, determine the range of OFF-periods for the gate signal.

AKTU 2015-16, Marks 10

Answer

A. **Step up chopper and its expression :** Refer Q. 2.18, Page 2–27A, Unit-2.

B. **Numerical :**

Given : $f = 2000$ Hz
To Find : T_{OFF}

1. $$V_0 = V_s \frac{1}{1-\alpha}$$

2. For $$V_0 = 2V_s$$

$$2V_s = V_s \frac{1}{1-\alpha}$$

$$\alpha = \frac{1}{2} = \frac{T_{ON}}{T}$$

3. Here, $$T = \frac{1}{f} = \frac{1}{2000} = 0.5 \text{ msec}$$

$$T_{ON} = \frac{1}{2} = \frac{0.5}{2} = 0.25 \text{ msec}$$

$$T_{OFF} = T - T_{ON} = 0.5 - 0.25 = 0.25 \text{ msec}$$

4. For $$V_0 = 4V_s$$

$$4V_s = V_s \frac{1}{1-\alpha}$$

$$\alpha = \frac{3}{4} = \frac{T_{ON}}{T}$$

$$T_{ON} = \frac{3T}{4} = \frac{3 \times 0.5}{4} = 0.375 \text{ msec}$$

$$T_{OFF} = T - T_{on} = 0.5 - 0.375 = 0.125 \text{ msec}$$

5. Range of OFF-periods = 0.125 msec to 0.25 msec.

Que 2.20. **A step up chopper has input voltage 220 V and output 660 V. If OFF time of chopper is 100 micro second, find chopping frequency.**

AKTU 2017-18, Marks 10

Answer

Given : $E_{DC} = 220$ V, $E_o = 660$V, $T_{OFF} = 100$ μsec $= 10^{-4}$ sec
Find : f_{ON}.

1. $$E_0 = E_{DC}\frac{T_{ON} + T_{OFF}}{T_{OFF}} = 660 = 220\frac{T_{ON} + 10^{-4}}{10^{-4}}$$

$$T_{ON} = 2 \times 10^{-4} \text{ sec}$$

2. $$f_{ON} = \frac{1}{T_{on}} = \frac{1}{2 \times 10^{-4}} \text{ sec}$$

$$f_{ON} = 5 \text{ kHz}$$

PART-8

Buck-Boost Converter.

Questions-Answers

Long Answer Type and Medium Answer Type Questions

Que 2.21. **Discuss step-up/down chopper (buck boost converter).**

Answer

A. **Principle of step-up/down choppers :**

1. A chopper can also be used both in step-up and step-down modes by continuously varying its duty cycle.
2. The principle of operation is illustrated in Fig. 2.21.1. The output voltage polarity is opposite to that of input voltage E_{DC}.

Scanned by TapScanner

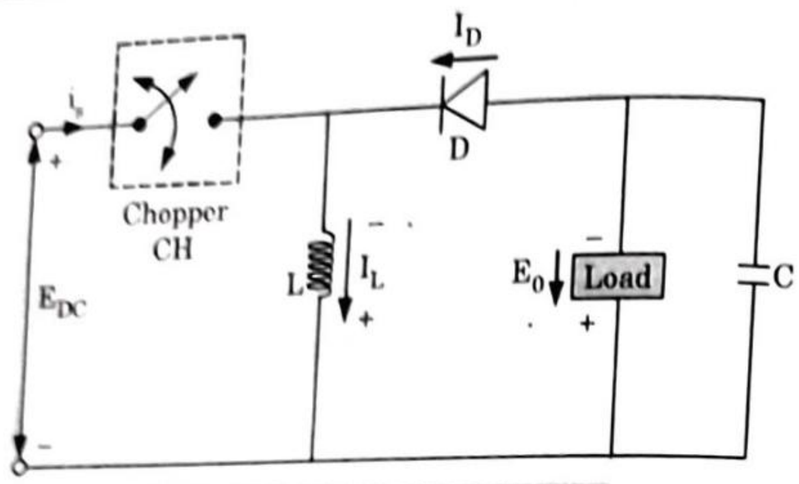

Fig. 2.21.1. Step-up/down chopper.

3. When the chopper is ON, the supply current flows through the path $E_{DC^+} - CH - L - E_{DC^-}$. Hence, inductor L stores the energy during the T_{ON} period.
4. When the chopper CH is OFF, the inductor current tends to decrease and as a result, the polarity of the emf induced in L is reversed as shown in Fig. 2.21.1. Thus, the inductance energy discharges in the load through the path.

$$L^+ - \text{Load} - D - L^-$$

5. During T_{ON}, the energy stored in the inductor is given by

$$W_i = E_{DC} I_S T_{ON} \quad ...(2.21.1)$$

6. During T_{OFF}, the energy fed to the load is

$$W_o = E_0 I_S T_{OFF} \quad ...(2.21.2)$$

7. For a lossless system, in steady state :

Input energy, W_i = output energy, W_o

$$\therefore \quad E_{DC} I_S I_{ON} = E_0 I_S T_{OFF}, \text{ or } E_0 = E_{DC} \frac{T_{ON}}{T_{OFF}} \quad ...(2.21.3)$$

$$E_0 = E_{DC} \frac{T_{ON}}{T - T_{OFF}} = E_{DC} \frac{1}{T/T_{ON} - T_{ON}/T_{ON}}$$

Substituting $\frac{T_{ON}}{T} = \alpha$, we get, $E_0 = E_{DC} \frac{1}{1/\alpha - 1}$

$$E_0 = E_{DC} \frac{\alpha}{1-\alpha} \quad ...(2.21.4)$$

8. For $0 < \alpha < 0.5$, the step-down chopper operation is achieved and for $0.5 < \alpha < 1$, step-up chopper operation is obtained.

PART-9

Switched Mode Power Supply (SMPS).

Questions-Answers

Long Answer Type and Medium Answer Type Questions

Que 2.22. **Write a short note on SMPS.**

Answer

1. An SMPS is based on a DC chopper with a rectified and possibly transformed output. The output voltage amplitude is controlled by varying the mark-space ratio of the chopper.

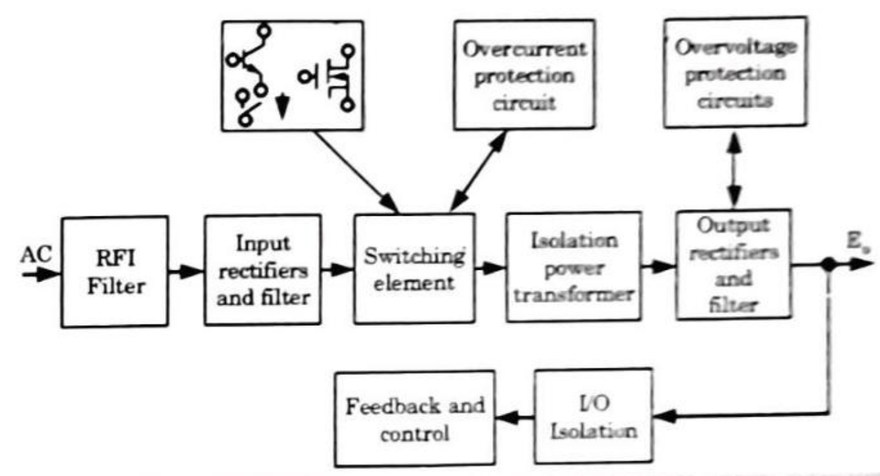

Fig. 2.22.1. Block diagram of OFF-line high frequency SMPS.

2. Fig. 2.22.1 shows the building blocks of a typical high-frequency OFF line switching power-supply.
3. The input rectification in a switching power supply is done directly OFF line, without the use of the low-frequency isolation power transformer, as in the case of linear power supply.
4. The AC line is directly rectified and filtered to produce a raw high-voltage DC, which in turn is fed into a switching element. The switch is operating at the high-frequencies of 20 kHz to 1 MHz, chopping the DC voltage into a high-frequency square-wave.

Scanned by TapScanner

5. This square-wave is fed into the power isolation transformer, stepped down to a predetermined value and then rectified and filtered to produce the required DC output.
6. A portion of this output is monitored and compared against the fixed reference voltage, and the error signal is used to control the ON-OFF times of the switch, thus regulating the output.
7. Since the switch is either ON or OFF, it is dissipating very little energy, resulting in a very high overall power supply efficiency of about 70 to 80 %.

☺☺☺

3 UNIT

Phase Controlled Converters

CONTENTS

Part-1 : Single Phase Half Wave Controlled Rectifier With Various Loads & Effect of Free Wheeling Diode ..... **3–2A to 3–10A**

Part-2 : Single Phase Fully Controlled and Half Controlled Bridge Converter With Various Loads ..... **3–10A to 3–18A**

Part-3 : Performance Parameters of Single Phase Uncontrolled and Controlled Converter ..... **3–18A to 3–20A**

Part-4 : Three Phase Half Wave Converter ..... **3–20A to 3–22A**

Part-5 : Three Phase Fully Controlled and Half Controlled Bridge Converters ..... **3–22A to 3–26A**

Part-6 : Effect of Source Impedance ..... **3–26A to 3–30A**

Part-7 : Single Phase and Three Phase Dual Converter ..... **3–30A to 3–36A**

Scanned by TapScanner

PART-1

Single Phase Half Wave Controlled Rectifier with Various Loads and Effect of Free Wheeling Diode.

Questions-Answers

Long Answer Type and Medium Answer Type Questions

Que 3.1. **Obtain the expression of input power factor for a single-phase half wave controlled rectifier feeding a purely resistive load.** **AKTU 2013-14, Marks 05**

Answer

1. The half wave controlled rectifier circuits consists of a single thyristor feeding DC power to a resistive load R as shown in Fig. 3.1.1. The source voltage is $v_s = V_m \sin \omega t$.
2. An SCR can conduct only when anode voltage is positive and a gating signal is applied as such, α.
3. At some delay angle α, a positive gate signal applied between gate and cathode turns on the SCR, immediately, fully supply voltage is applied to the load as v_o.
4. At the instant of delay angle α, v_0 rises from zero to $V_m \sin \alpha$. For resistive load, current i_o is in phase with v_o.

   From Fig. 3.1.1,

$$V_o = \frac{1}{2\pi}\int_\alpha^\pi V_m \sin \omega t \, d(\omega t) = \frac{V_m}{2\pi}(1 + \cos \alpha) \quad ...(3.1.1)$$

5. For maximum value of V_o, $\alpha = 0°$

   then $$V_{omax} = \frac{V_m}{2\pi} 2 = \frac{V_m}{\pi}$$

   And average load current,

$$I_o = \frac{V_o}{R} = \frac{V_m}{2\pi R}(1 + \cos \alpha) \quad ...(3.1.2)$$

6. Rms voltage, $$V_{or} = \left[\frac{1}{2\pi}\int_\alpha^\pi V_m^2 \sin^2 \omega t \, d(\omega t)\right]^{\frac{1}{2}}$$

$$= \frac{V_m}{2\sqrt{\pi}}\left[(\pi - \alpha) + \frac{1}{2}\sin 2\alpha\right]^{\frac{1}{2}} \quad ...(3.1.3)$$

$$I_{or} = \frac{V_o}{R} = \frac{V_m}{2R\sqrt{\pi}}\left[(\pi - \alpha) + \frac{1}{2}\sin 2\alpha\right]^{\frac{1}{2}}$$

7. Power delivered = (Rms load voltage) × (Rms load current)

$$= V_{or} I_{or} = \frac{V_{or}^2}{R} = I_{or}^2 R$$

8. Input volt amperes = (Rms source voltage) × (Total rms line current)

$$= V_s I_{or}$$

9. Input power factor $$= \frac{\text{Power delivered to load}}{\text{Input VA}}$$

$$= \frac{V_{or} I_{or}}{V_s I_{or}} = \frac{V_{or}}{V_s}$$

$$\text{Input pf} = \frac{1}{\sqrt{2}\,\pi}\left[(\pi - \alpha) + \frac{1}{2}\sin 2\alpha\right]^{1/2}$$

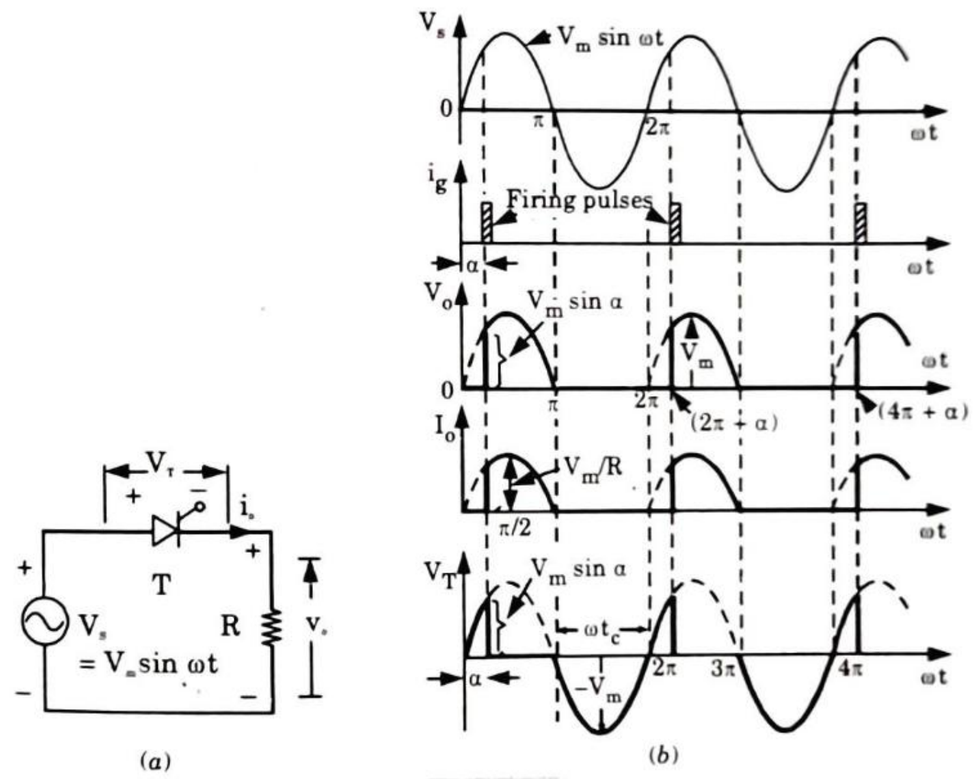

Fig. 3.1.1.

Que 3.2. **A single phase half controlled bridge operated from the 230 V, 50 Hz mains feeds a resistive load of 100 Ω. If the firing angle is 60°, calculate**

i. Average output voltage
ii. Rms output voltage
iii. Total output power

Scanned by TapScanner

iv. DC output power

v. Load current at instant of turn on. **AKTU 2014-15, Marks 10**

Answer

Given : $V_s = 230$ V, $R = 100\ \Omega$, $\alpha = 60°$ or $\pi/3$

To Find : $V_{o(av)}$, $V_{o(rms)}$, $P_{o(total)}$, $P_{o(av)}$ and i_o

1. Average output voltage.

$$V_{o(av)} = \frac{V_m}{\pi}(1+\cos\alpha) = \frac{230\sqrt{2}}{\pi}(1+\cos\pi/3) = 155.31$$

2. Rms output voltage,

$$V_{o(rms)} = \frac{V_m}{\sqrt{2}\sqrt{\pi}}\left[(\pi-\alpha)+\frac{1}{2}\sin 2\alpha\right]^{1/2}$$

$$= \frac{230\sqrt{2}}{\sqrt{2}\sqrt{\pi}}\left[120° + \frac{1}{2}\sin 2\alpha\ \frac{\pi}{3}\right]^{1/2}$$

$$= \frac{230}{\sqrt{\pi}}\left[\frac{2\pi}{3}+0.433\right]^{1/2} = 206.295 \text{ V}$$

3. Total output power,

$$P_{o(total)} = \frac{V^2_{o\,(rms)}}{R} = \frac{206.295\ V}{100} = 425.58 \text{ VA}$$

4. DC output power,

$$P_{o(av)} = \frac{V^2_{o\,(av)}}{R} = \frac{(155.3)^2}{100} = 241.18 \text{ W}$$

5. Load current at t_{ON}

$$i_o\left(\frac{\pi}{3}\right) = \frac{V_o(\pi/3)}{R} = \frac{V_m \sin\omega t\,|_{\omega t=\pi/3}}{R}$$

$$= \frac{230\sqrt{2}\sin\pi/3}{100} = 2.8 \text{ A}$$

Que 3.3. **Discuss single phase half wave controlled rectifier with inductive or *R-L* load. Also draw the waveform for it.**

Answer

1. A single phase half wave thyristor circuit with *R-L* load is shown in Fig. 3.3.1.

2. At $\omega t = \alpha$, thyristor is turned on by gating signal. The load voltage v_o at once becomes equal to source voltage v_s as shown in Fig. 3.3.2. But the inductance L forces the load, or output, current i_o to rise gradually.
3. After some time, i_o reaches maximum value and then begins to decrease.
4. At $\omega t = \pi$, v_o is zero but i_o is not zero because of the load inductance L. After $\omega t = \pi$, SCR is subjected to reverse anode voltage but it will not be turned off as load current i_o is not less than the holding current.
5. At some angle $\beta > \pi$, i_o reduces to zero and SCR is turned OFF as it is already reverse biased. After $\omega t = \beta$, $v_o = 0$ and $i_o = 0$. At $\omega t = 2\pi + \alpha$, SCR is triggered again, v_o is applied to the load and load current develops as before.
6. Angle β is called the extinction angle and $(\beta - \alpha) = \gamma$ is called the conducting angle.

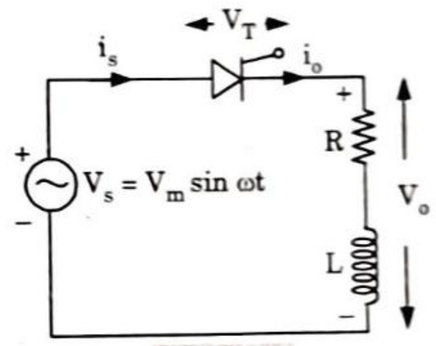

Fig. 3.3.1.

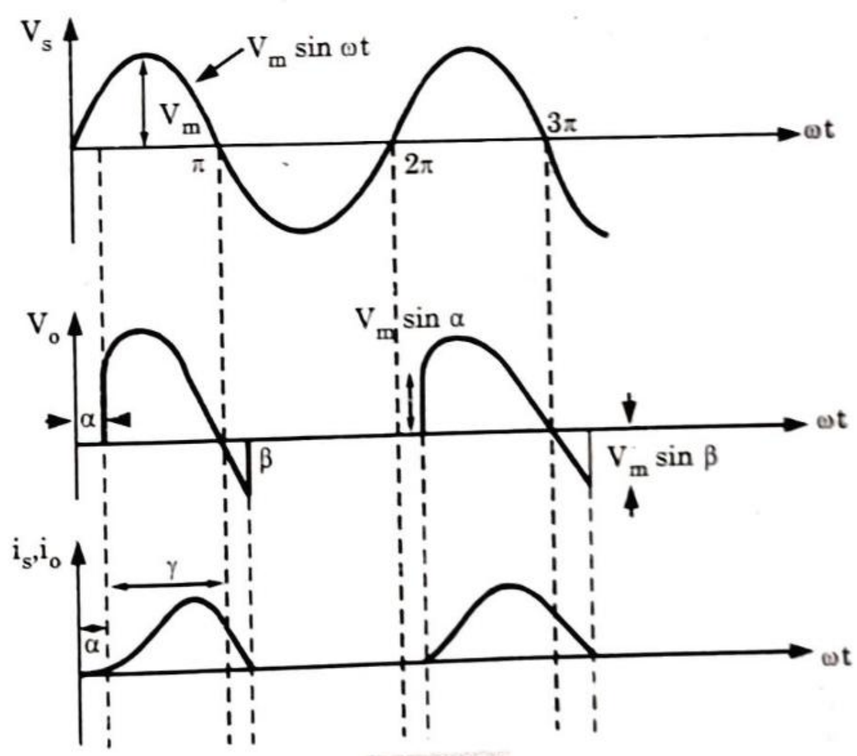

Fig. 3.3.2.

Scanned by TapScanner

7. Output voltage,

$$V_o = \frac{1}{2\pi}\int_\alpha^\beta V_m \sin\omega t \, d(\omega t)$$

$$V_o = \frac{V_m}{2\pi}(\cos\alpha - \cos\beta)$$

8. Average load current,

$$I_o = \frac{V_m}{2\pi R}(\cos\alpha - \cos\beta)$$

9. Rms load voltage,

$$V_{or} = \left[\frac{1}{2\pi}\int_\alpha^\beta V_m^2 \sin^2\omega t \, d(\omega t)\right]^{1/2}$$

$$V_{or} = \frac{V_m}{2\sqrt{\pi}}\left[(\beta-\alpha) - \frac{1}{2}\{\sin 2\beta - \sin 2\alpha\}\right]^{1/2}$$

Que 3.4. Explain 1ϕ half wave controlled rectifier *R-L* load with freewheeling diode. Also draw the waveform for it.

Answer

1. The waveform of load current i_o can be improved by connecting freewheeling diode across load. A freewheeling diode is also called bypass or commutating diode.
2. At $\omega t = 0$, source voltage is becoming positive. At some delay angle α, forward biased SCR is triggered and source voltage V_s appears across load as V_o.
3. At $\omega t = \pi$, source voltage V_s is zero and then V_s tends to reverse, freewheeling diode is forward biased through the conducting SCR. Then the i_o is immediately transferred from SCR to FD as V_s tends to reverse.

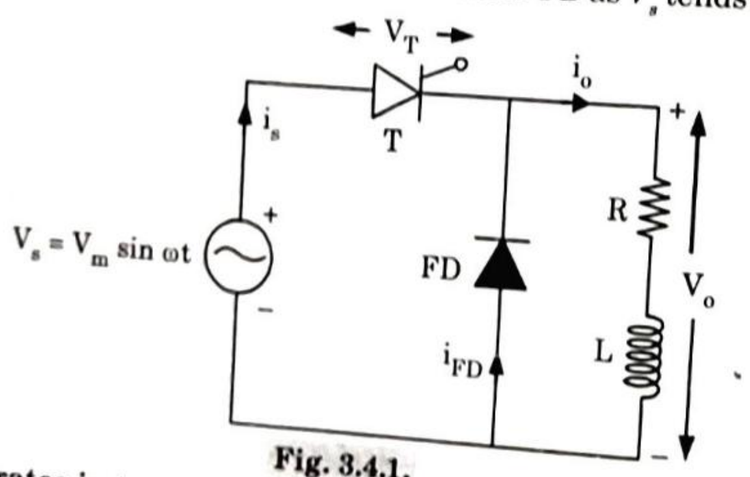

Fig. 3.4.1.

4. **It operates in two modes :**

Mode I : It is called conduction mode and SCR conducts from α to π, (2π + α)to 3π and so on and FD is reverse biased.

Mode II : It is called as freewheeling mode, extends from π to (2π + α), 3π to (4π + α.) SCR is reverse biased from π to 2π, 3π to 4π, FD conducts from π to (2π + α), 3π to (4π + α).

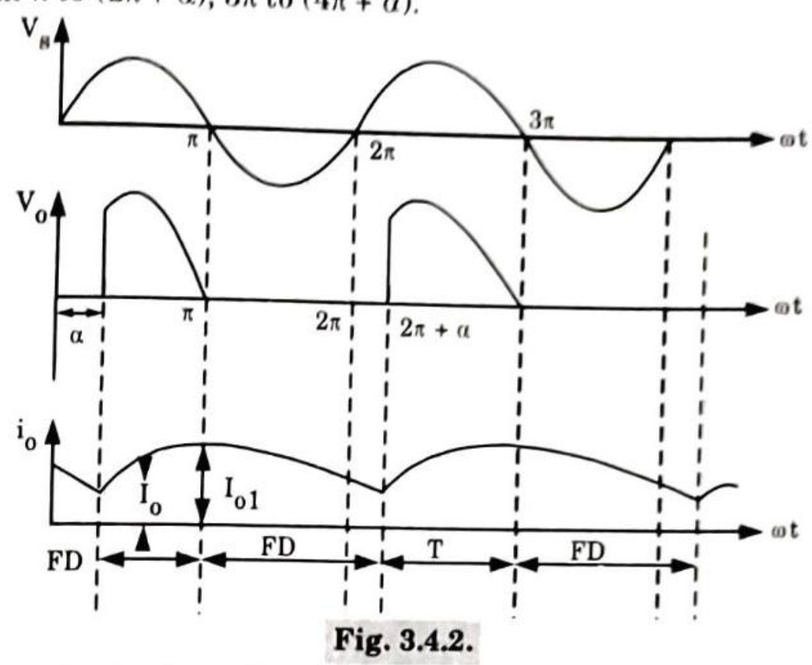

Fig. 3.4.2.

5. Average load voltage V_o is

$$V_o = \frac{1}{2\pi}\int_\alpha^\pi V_m \sin\omega t \, d(\omega t) = \frac{V_m}{2\pi}(1+\cos\alpha)$$

6. Average load current, $I_o = \frac{V_o}{R} = \frac{V_m}{2\pi R}(1+\cos\alpha)$

Que 3.5. Define 1ϕ half wave circuit with *R-L-E* load. Also draw the waveform for it.

Answer

1. The circuit diagram of single-phase half-wave controlled converter with *R-L-E* load is shown in Fig. 3.5.1(*a*), where *E* is the counter emf may be due to a battery or a DC motor.

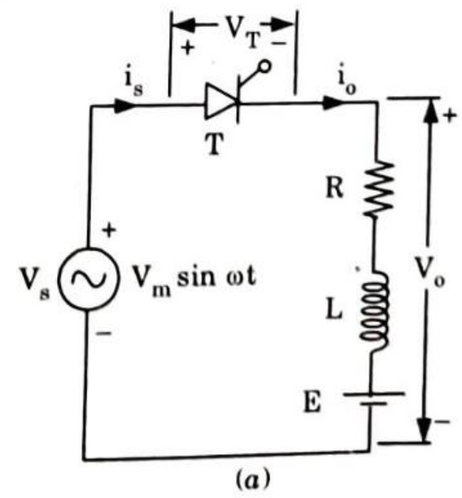

(*a*)

Scanned by TapScanner

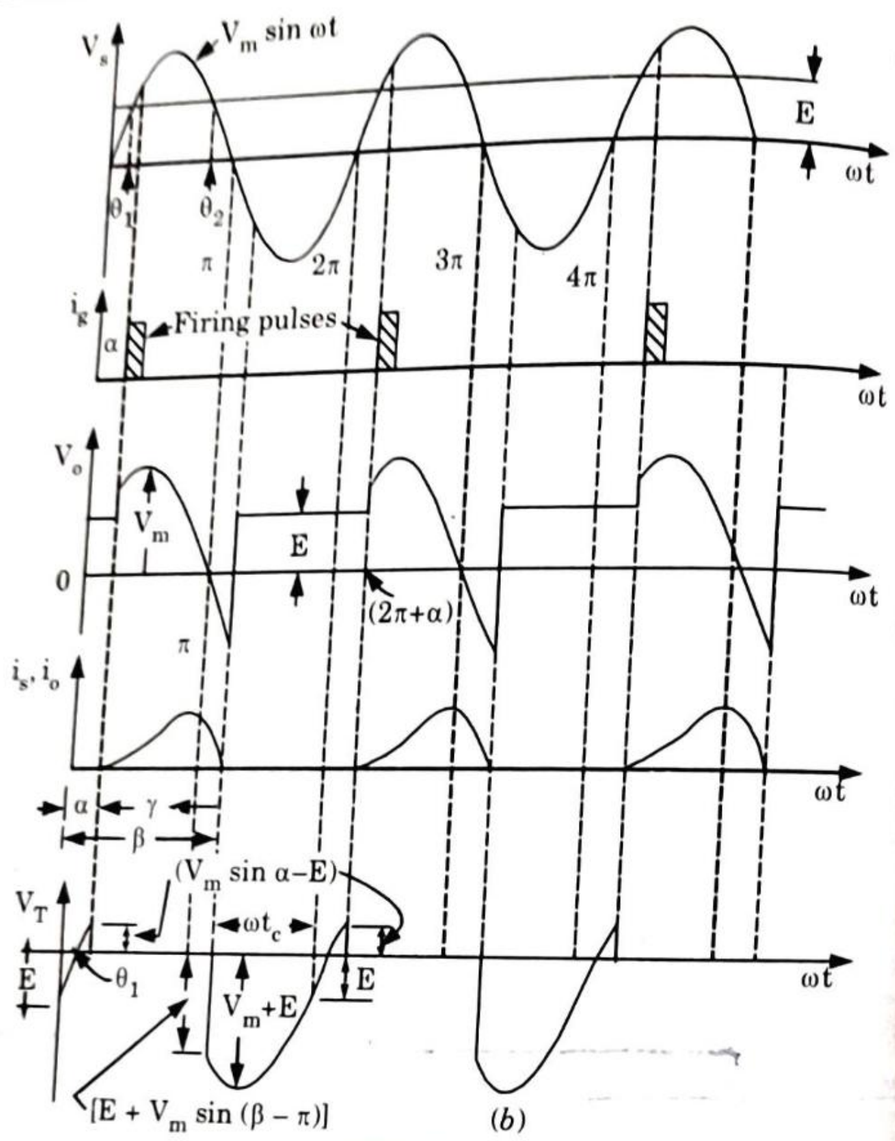

Fig. 3.5.1.

2. The minimum value of firing angle (θ_1) is obtained from the relation $V_m \sin \theta_1 = E$

$$\theta_1 = \sin^{-1}(E/V_m) \qquad ...(3.5.1)$$

3. If thyristor is fired at an angle $\alpha < \theta_1$, then $E > V_s$, SCR is reverse biased and therefore, it will not turn on.
4. The maximum value of firing angle is $\theta_2 = \pi - \theta_1$, Fig. 3.5.1(*b*). During this interval i_o current is zero. When load voltage $V_o = E$ during this time i_o is not zero, V_o follows V_s curve.
5. Applying KVL in Fig. 3.5.1(*a*) the voltage differential equation is

$$V_m \sin \omega t = Ri_o + 2\frac{di_o}{dt} + E \qquad ...(3.5.2)$$

6. The solution of this equation is made up of two components; namely steady-state current component i_s and the transient current components i_t.

$$i_s = i_{s1} + i_{s2}$$

where, i_{s1} = Steady state current due to AC

i_{s2} = Steady state current due to DC c

7. Now $i_{s1} = \frac{V_m}{Z} \sin(\omega t - \phi)$

$$i_{s2} = -(E/R)$$

Transient current $i_t = Ae^{-(R/L)t}$

8. Total current,

$$i_o = i_{s1} + i_{s2} + i_t = \frac{V_m}{Z} \sin(\omega t - \phi) - \frac{E}{R} + Ae^{-(R/L)t} \qquad ...(3.5.3)$$

9. At $\omega t = \alpha$, $i_o = 0$ in eq. (3.5.3),

then, $$A = \left[\frac{E}{R} - \frac{V_m}{Z}\sin(\alpha - \phi)\right] e^{-R\alpha/L\omega}$$

$$\therefore i_o = \frac{V_m}{Z}\left[\sin(\omega t - \phi) - \sin(\alpha - \phi)\exp\left\{-\frac{R}{\omega L}(\omega t - \alpha)\right\}\right]$$

$$- \frac{E}{R}\left[1 - \exp\left\{-\frac{R}{\omega L}(\omega t - \alpha)\right\}\right] \qquad ...(3.5.4)$$

Eq. (3.5.4) is applicable for $\alpha \le \omega t \le \beta$. Average voltage across inductance is zero.

Que 3.6. **A 230 V, 50 Hz, one pulse SCR controlled converter is triggered at a firing angle of 40° and the load currents extinguishes at an angle of 210°. Find the circuit turn off time, average output voltage and the average load current for :**

a. $R = 2\,\Omega$ **and** $L = 1$ **mH**

b. $R = 2\,\Omega$, $L = 1$ **mH and** $E = 120$ **V.**

Answer

Given : $V_m = 230$ V, $f = 50$ Hz, $\alpha = 40°$, $\beta = 210°$

To Find : t_c, V_o and I_o at $R = 2\,\Omega$, $L = 1$ mH and $R = 2\,\Omega$, $L = 1$ mH, $E = 120$ V.

1. Circuit turn off time,

$$t_c = \frac{2\pi - \beta}{\omega} = \frac{(360 - 210)\pi}{180 \times 2\pi \times 50} = 8.333 \text{ msec}$$

2. $$V_o = \frac{1}{2\pi}\int_\alpha^\beta V_m \sin \omega t \, d(\omega t) = \frac{V_m}{2\pi}(\cos\alpha - \cos\beta)$$

$$V_o = \sqrt{2}\frac{230}{2\pi}[\cos 40° - \cos 210°] = 84.47 \text{ V}$$

Scanned by TapScanner

3. Average load current,

$$I_o = \frac{V_o}{R} = \frac{84.477}{2} = 42.2385 \text{ A}$$

4. Average load current,

$$I_o = \frac{1}{2\pi R}[V_m(\cos\alpha - \cos\beta) - E(\beta - \alpha)]$$

$$I_o = \frac{1}{2\pi \times 2}\left[\sqrt{2} \times 230(\cos 40° - \cos 210°) - 120(210° - 40°)\frac{\pi}{180}\right]$$

$$= 13.911 \text{ A}$$

5. Average load voltage,

$$V_o = E + I_o R = 120 + 13.911 \times 2 = 147.82 \text{ V}$$

Que 3.7. **A single phase 230 V, 1 kW heater is connected across a 230 V, 50 Hz supply through a thyristor. Determine the power absorbed by the heater for the firing angle of 45°.**

AKTU 2016-17, Marks 10

Answer

Given : $V_m = 230$ V, $f = 50$ Hz, $\alpha = 45°$.

To Find : W.

1. R is the heater resistance.

We have $$E_{rms} = E_m\left[\frac{\pi - \alpha}{4\pi} + \frac{\sin 2\alpha}{8\pi}\right]^{1/2}$$

2. At $\alpha = \pi/4$, $E_{rms} = 155$ V

∴ Heat power, $W = E^2_{rms}/R$

Now, $$R = \frac{230^2}{1 \text{ kW}} = 52.90\ \Omega$$

∴ $$W = (155)^2/52.90 = 454.15 \text{ watts}$$

PART-2

Single Phase Fully Controlled and Half Controlled Bridge Converter with Various Loads.

Questions-Answers

Long Answer Type and Medium Answer Type Questions

Que 3.8. **Explain single phase fully controlled bridge converter for resistive load.**

Answer

1. In the bridge circuit, diagonally opposite pair of thyristor are made to conduct, and are commutated simultaneously.
2. During the first positive half cycle, SCRs T_1 and T_2 are forward biased and if they are triggered simultaneously, then current flows through the path $L - T_1 - R - T_2 - N$.
3. During the negative half cycle of the AC input, SCRs T_3 and T_4 are forward biased and if they are triggered simultaneously, current flows through the path $N - T_3 - R - T_4 - L$.

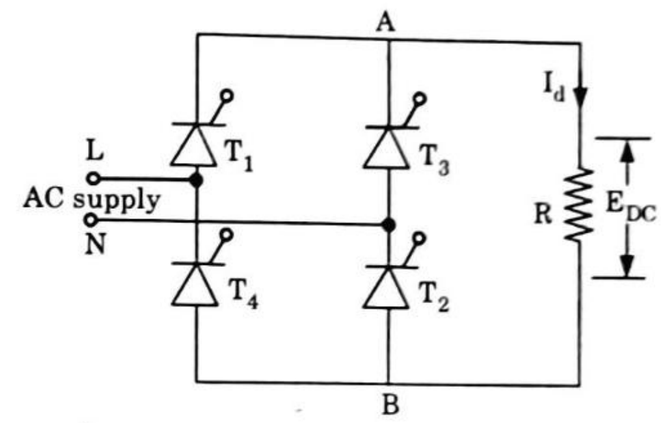

Fig. 3.8.1. Fully-controlled bridge circuit with resistive load.

4. The voltage and current waveforms for this circuit are shown in Fig. 3.8.2.

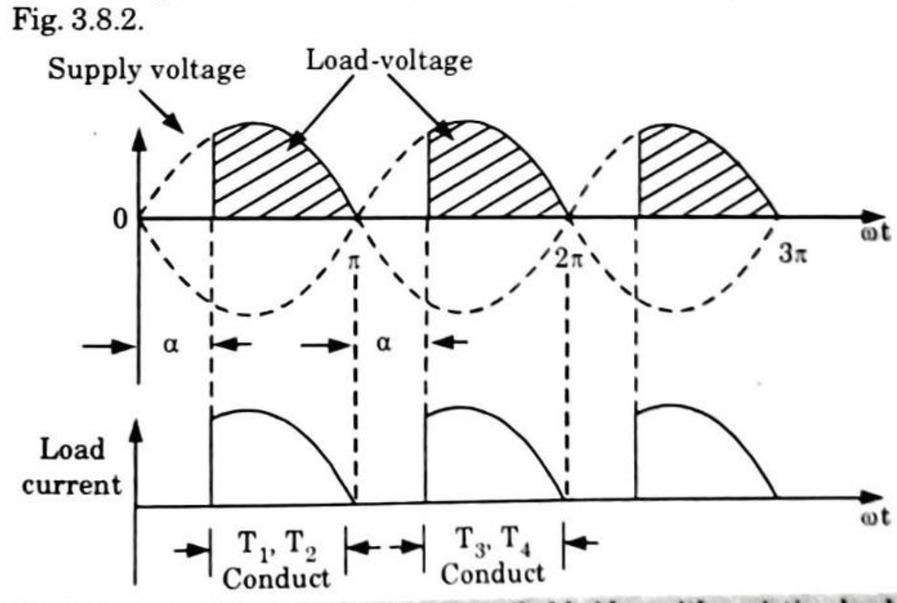

Fig. 3.8.2. Waveforms for fully-controlled bridge with resistive load.

Scanned by TapScanner

Que 3.9. **Explain the operation of single-phase fully-controlled bridge converter feeding a highly inductive load and draw relevant output voltage and current waveforms.** **AKTU 2016-17, Marks 15**

AKTU 2013-14, Marks 10

OR

Describe the working of a single-phase fully-controlled bridge converter in the rectifying and inversion mode, with the help of relevant waveform. Derive the expressions for average output voltage and rms output voltage. **AKTU 2015-16, Marks 10**

Answer

1. The single phase fully controlled bridge circuit with *R-L* load is shown in Fig. 3.9.1.

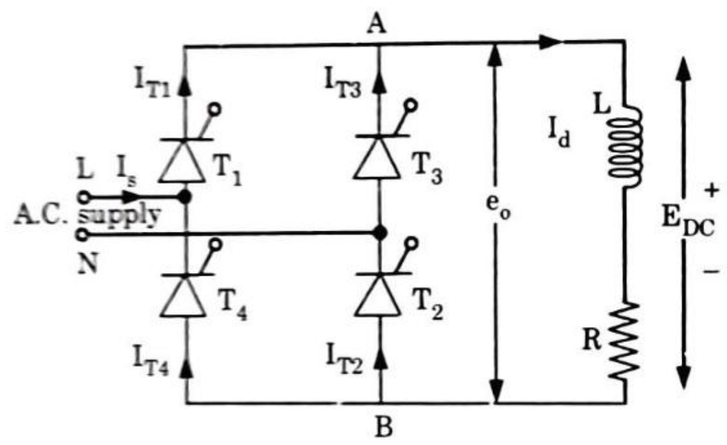

Fig. 3.9.1. Full controlled single-phase bridge with R-L load.

2. Inductance *L* is used in the circuit to reduce the ripple. A large value of *L* will result in a continuous steady current in the load. A small value of *L* will produce a discontinuous load current for large firing angles.
3. As shown in Fig. 3.9.2, at firing angle $\alpha = 60°$ thyristor T_1 and T_2 are triggered. Current flows through the path $L - T_1 - A - L - R - B - T_2 - N$.
4. Supply voltage from this instant appears across output terminal and forces the current through load. This load current, I_d, is assumed to be constant.
5. Now, at instant π, voltage reverses. However, because of very large inductance *L*, the current is maintained in the same direction at constant magnitude I_d which keeps the thyristor T_1 and T_2 in conducting state and hence, the negative supply voltage appears across output terminals.
6. At the angle $\pi + \alpha$, thyristor T_3 and T_4 are fired. With this, the negative line voltage reverse biases thyristors T_1 through T_3 and T_2 through T_4 of commutating thyristors T_1 and T_2. The current flows through the path $N - T_3 - A - L - R - B - T_4 - L$.

7. This continues in every half cycle and we get the output voltage as shown in the Fig. 3.9.2. The line current is positive when T_1, T_2 are conducting and negative when T_3, T_4 are conducting

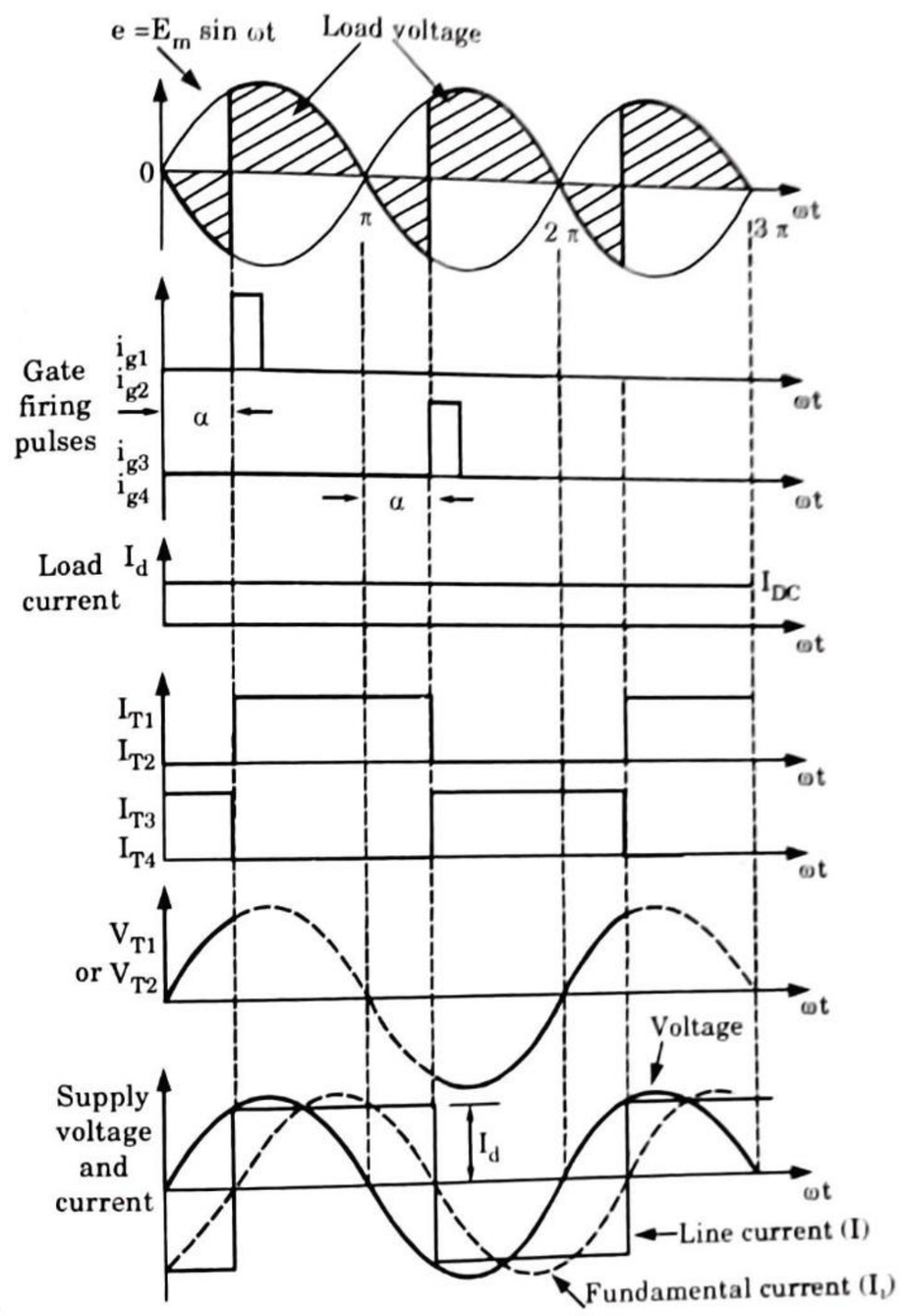

Fig. 3.9.2. Waveforms for α = 60° (α < 90°).

8. The average output DC voltage can be obtained as

$$E_{DC} = \frac{1}{\pi}\int_{\alpha}^{\pi+\alpha} E_m \sin \omega t \, d(\omega t) = \frac{E_m}{\pi}\left[-\cos \omega t\right]_{\alpha}^{\pi+\alpha}$$

Scanned by TapScanner

$$= \frac{E_m}{\pi}[\cos\alpha - \cos(\pi+\alpha)] \; E_{DC} = \frac{2E_m}{\pi}\cos\alpha \qquad ...(3.9.1)$$

$$E_{DC(rms)} = \left[\frac{1}{\pi}\int_{\alpha}^{\pi+\alpha} V_m^2 \sin^2 \omega t \, d\omega t\right]^{1/2} = \frac{V_m}{\sqrt{2}}$$

9. By controlling the phase angle of firing pulses, applied to the gates of the thyristors in the range 0° – 180°, the average value of the DC voltage can be varied continuously from positive maximum to negative maximum. Hence, Two modes of operation are possible with fully controlled single-phase bridge circuit.

Mode 1, Rectifying mode :

1. During the interval α to π, both supply voltage E_s and supply current I_s are positive; power, therefore, flows from AC source to load.
2. During the interval (π to π + α), E_s is negative but I_s is positive the load therefore returns some of its energy to the supply system.
3. Also eq. (3.9.1) shows that if α < 90°, the voltage at the DC terminals is positive, therefore, the power flows from AC side to DC side and the converter operates as a rectifier.

Mode 2, Inverting mode :

1. In this mode α is greater than 90°.
2. From eq. (3.9.1) the mean DC terminal voltage is negative for α > 90°, the DC power and hence also the mean AC power, is negative.

Que 3.10. **Discuss 1ϕ half controlled bridge rectifier with *R-L* load.**

Answer

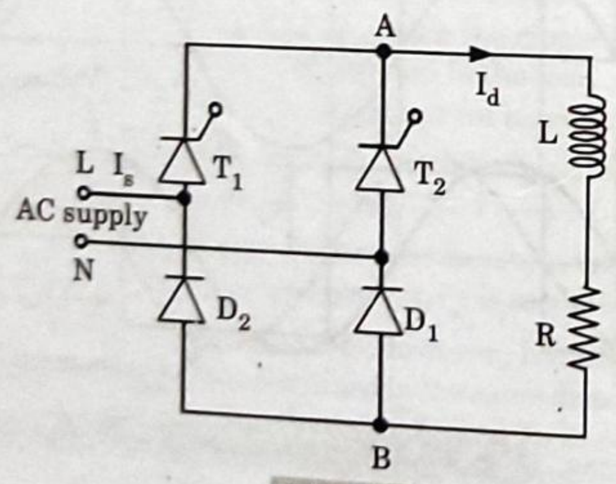

Fig. 3.10.1.

1. Fig. 3.10.1 shows arrangements of 2-pulse half-controlled bridge converters with inductive load.

2. As shown in Fig. 3.10.1, thyristor T_1 is turned-ON at a firing angle α in each positive half-cycle. From this instant, supply voltage appears across output terminals *AB*, through thyristor T_1 and diode D_1. Current I_d flows through the path $L - T_1 - A - L - R - B - D_1 - N$.
3. Here, the filter inductance *L* is assumed to be sufficiently large as to produce continuous load current. This current I_d is taken to be constant.
4. Now, when the supply voltage reverses at ωt = π, the diode D_2 is forward biased since diode D_1 is already conducting. The diode D_2 then turns ON, and the load current passes through D_2 and T_1.
5. The supply voltage reverse-biases D_1 and turns it OFF. Thus, the load-current freewheels through the path $R - B - D_1 - T_1 - A - L$ during the interval from π to (π + α) in each supply-cycle.
6. During the negative half-cycle, at the instant (π + α), a triggering-pulse is applied to the forward-biased thyristor T_2. Thyristor T_2 is turned ON.
7. As thyristor T_1 is turned ON, the supply voltage reverse-biases T_1 and then turns it OFF by the line commutation. Therefore, the load-current flows through T_2 and D_2 the above cycle repeats and the waveforms obtained are as shown in Fig. 3.10.2.

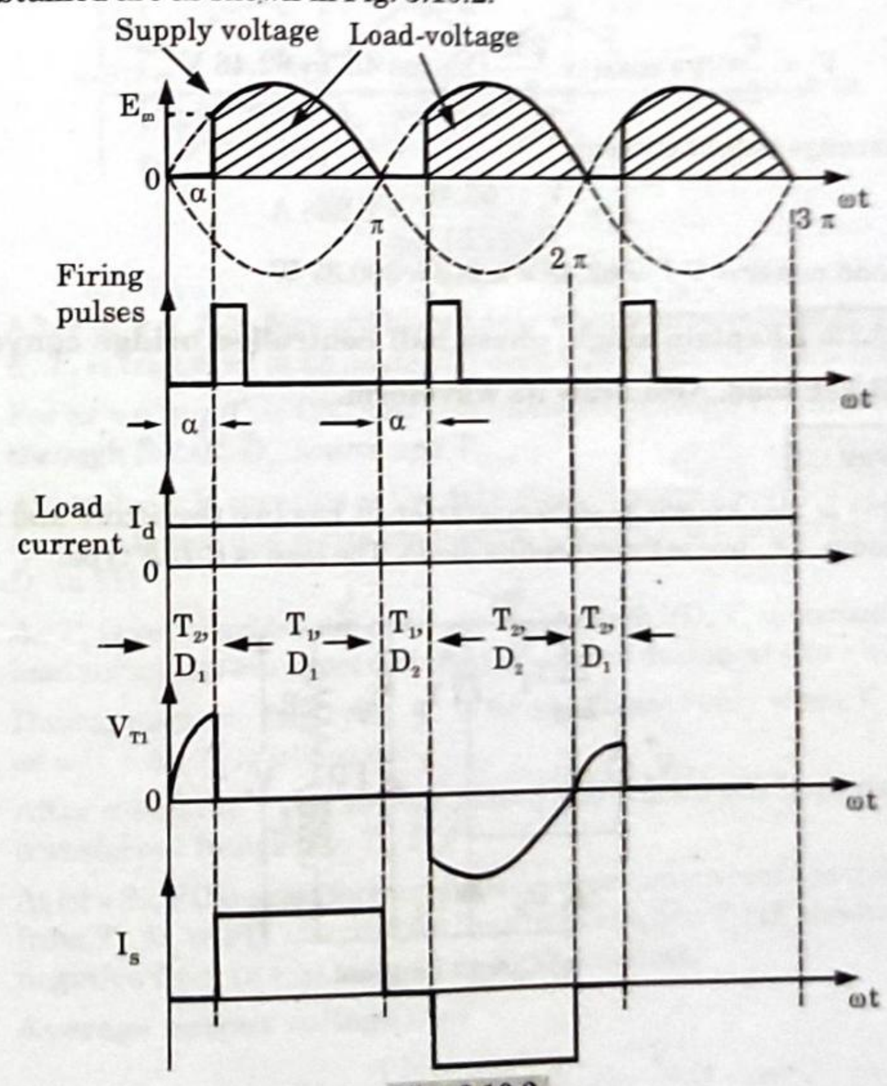

Fig. 3.10.2.

Scanned by TapScanner

6. The average DC output, neglecting diode and SCR drop, is given by

$$E_{DC} = \frac{1}{\pi}\int_{\alpha}^{\pi} E_m \sin \omega t \, d(\omega t) = \frac{E_m}{\pi}\left[1 + \cos \alpha\right]$$

Que 3.11. **A single-phase semi-converter connected to 230 V, 50 Hz source is feeding a load R = 10 ohms in series with a large inductance that makes the load current ripple free. For a firing angle of 45 degree, calculate the output performance parameters of this converter.**

AKTU 2015-16, Marks 10

Answer

Given : $V_m = 230$ V, $\alpha = 45°$ and $R = 19\,\Omega$
To Find : V_o, I_o and load power.

1. For a single phase semi converter, average output voltage

$$V_o = \frac{V_m}{2\pi}(1 + \cos \alpha) = \frac{230}{2\pi}(1 + \cos 45°) = 62.48 \text{ V}$$

2. Average output current,

$$I_o = \frac{V_o}{R} = \frac{62.48}{10} = 6.248 \text{ A}$$

3. Load power = $V_o I_o$ = 62.48 × 6.248 = 390.37 W

Que 3.12. **Explain single phase half controlled bridge converter with R-L-E load. Also draw its waveform.**

Answer

1. This is also known as semi-converter. It has two thyristors and three diodes, *i.e.*, one is freewheeling diode. The load is R-L-E type.

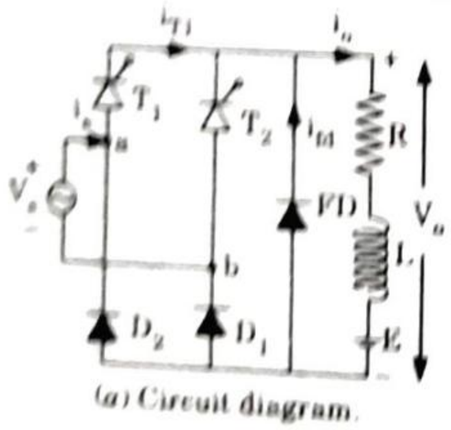

(*a*) Circuit diagram.

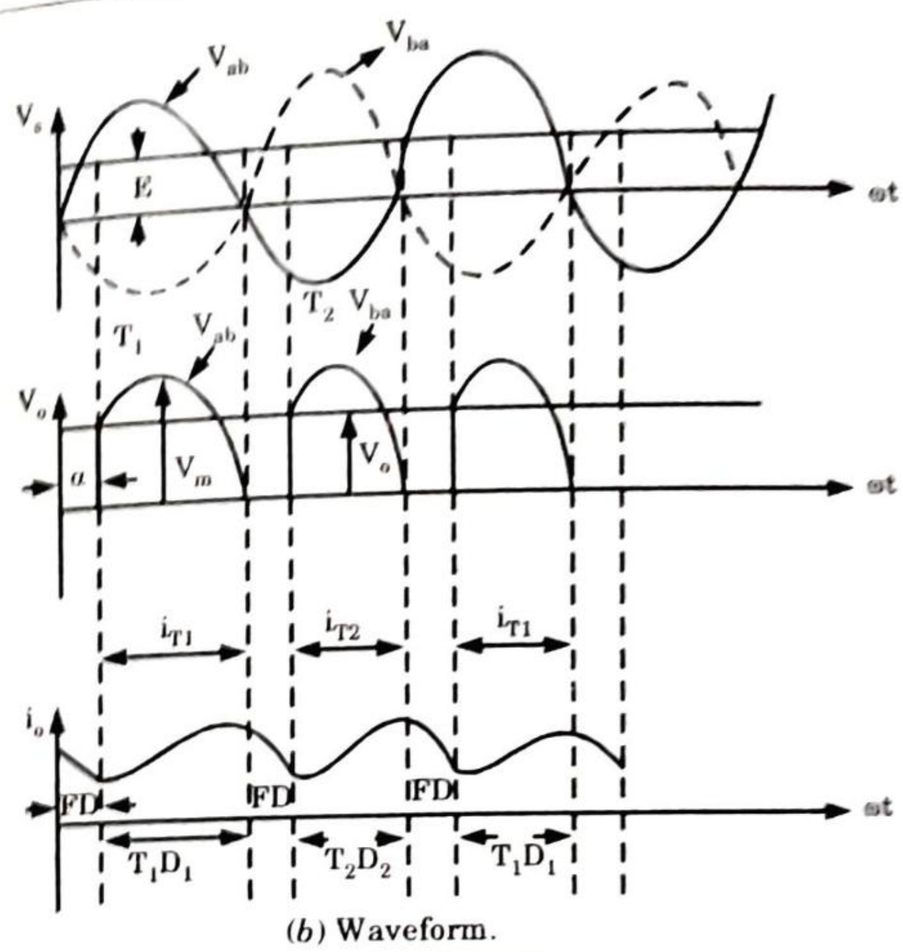

(*b*) Waveform.

Fig. 3.12.1.

2. After $\omega t = 0$, T_1 is forward biased only when source voltage V_m exceeds E, T_1 is triggered at an angle of α such that $V_m \sin \alpha > E$.
3. For $\omega t = \alpha$ to π, T_1 is ON, load gets connected through T_1 and D_1. i_o flows through R-L-E, D_1, source and T_1.
4. After $\omega t = \pi$, V_o reverses as the AC voltage changes polarity and FD gets forward biased and starts conducting. Current i_o is transferred from T_1, D_1 to FD.
5. As T_1 is reversed biased at $\omega t = \pi + \alpha$ through FD, T_1 is turned off and load terminals are short circuited. V_o is zero during $\omega t < (\pi + \alpha)$.
6. During negative half cycle, T_2 is forward biased only when $V_s > E$. At $\omega t = (\pi + \alpha)$, T_2 is triggered.
7. After $\pi + \alpha$, the FD is reverse biased and turned off. Load current is transferred from FD to T_2, D_2.
8. At $\omega t = 2\pi$, FD is again forward biased and output current i_o is transferred from T_2, D_2 to FD. i_o is positive from (α to π) when T_1, D_1 conduct and is negative from ($\pi + \alpha$) to 2π when T_2, D_2 conduct.
9. **Average output voltage :**

$$V_o = \frac{1}{\pi}\int_{\alpha}^{\pi} V_m \sin \omega t \, d(\omega t) = \frac{V_m}{\pi}(1 + \cos \alpha)$$

Scanned by TapScanner

$$V_{rms} = \frac{V_m}{\sqrt{2\pi}}\left[(\pi - \alpha) + \frac{1}{2}\sin 2\alpha\right]^{1/2}$$

PART-3

Performance Parameters of Single Phase Uncontrolled and Controlled Converter.

Questions-Answers

Long Answer Type and Medium Answer Type Questions

Que 3.13. **Define different performance factors of converters.**

Answer

1. **Input displacement angle (ϕ_1) :** The input displacement angle, denoted by ϕ, is defined as the angular displacement between the fundamental components of the AC line current and the associated line to neutral voltage.
2. **Input displacement factor ($\cos \phi_1$) :** The input displacement factor is defined as the cosine of the input displacement angle.
3. **Input power factor (pf) :**

   The input power factor is defined as the ration of the total mean input power to the total RMS input volt-amperes.

$$pf = \frac{E_1 I_1 \cos \phi_1}{E_{rms} I_{rms}} = \frac{I_1}{I_{rms}} \cos \phi_1$$

where, $E_1 = E_{rms}$ = Phase voltage,

I_1 = Fundamental component of the supply current.

4. **DC voltage ration (r) :** The DC voltage ration, denoted r, is defined as the ration of the mean DC terminal voltage at a given firing angle α, to the maximum possible DC terminal voltage, that is, the voltage obtained when the firing angle is zero degree.
5. **Input current distortion factor :** It is defined as ratio of the rms amplitude of the fundamental component, to the total rms amplitude.
6. **Input harmonic factor (I_H) :** The input harmonic factor is defined as the ratio of the total harmonic content to the fundamental component.

$$\therefore \quad I_H = \frac{(I_{rms}^2 - I_1^2)^{1/2}}{I_1}$$

7. **Voltage ripple factor (K_V) :** The voltage ripple factor is defined as the ratio of the net harmonic content of the output voltage to the average output current.

$$K_v = \frac{\sqrt{E_{DC_{rms}}^2 - E_{DC}^2}}{E_{DC}}$$

where E_{DC} = Average value of output voltage,

E_{DCrms} = rms value of output voltage.

8. **Current ripple factor (K_I) :** The current ripple factor is defined as the ratio of the net harmonic content of the output voltage to the average output current.

$$K_I = \frac{\sqrt{I_{drms}^2 - I_d^2}}{I_d}$$

where, I_d = Average value of output-current

I_{drms} = rms value of the output-current.

Que 3.14. **Write expression for the following performance factor of single-phase fully controlled bridge converter.**

i. **Input displacement factor.**
ii. **Input power factor.**
iii. **DC voltage ratio.**
iv. **Input-current distortion factor.**
v. **Input harmonic factor.**
vi. **Voltage ripple factor.**

Answer

1. **Input displacement factor (*DSF*) :**

$$DSF = \cos \alpha$$

2. **Input power factor (*pf*) :**

$$pf = \left(\frac{I_1}{I_{rms}}\right) \cos \phi_1 = \left(\frac{2\sqrt{2}\, I_d}{\frac{\pi}{I_d}}\right) \cos \alpha = \frac{2\sqrt{2}}{\pi} \cos \alpha$$

3. **DC voltage ratio :** $r = \dfrac{\frac{1}{\pi}\int_{\alpha}^{(\pi+\alpha)} E_m \sin \omega t \, d(\omega t)}{\frac{1}{\pi}\int_{0}^{\pi} E_m \sin \omega t \, d(\omega t)} = \cos \alpha$

4. **Input current distortion factor :**

$$= \frac{I_1}{I_{rms}} = \frac{2\sqrt{2}\, I_d}{\pi I_d} = \frac{2\sqrt{2}}{\pi}$$

Scanned by TapScanner

5. **Input harmonic factor (I_H) :**

$$I_H = \left[\frac{\pi^2}{8} - 1\right]^{1/2}$$

6. **Voltage ripple factor (K_V) :**

$$K_V = \left(\frac{\pi^2}{8\cos^2\alpha} - 1\right)^{1/2}$$

Que 3.15. **Compare performance parameter of semi-converter and full-converter.**

Answer

S. No.	Parameter	Full-converter	Semi-converter
1.	Average-load voltage	$E_{DC} = \frac{2E_m}{\pi}\cos\alpha$	$E_{DC} = \frac{E_m}{\pi}(1+\cos\alpha)$
2.	RMS load voltage	$E_{rms} = \frac{E_m}{\sqrt{2}}$	$E_{rms} = \frac{E_m}{\sqrt{2}}\left[\frac{1}{\pi}\left(\pi - \alpha + \frac{\sin 2\alpha}{2}\right)\right]^{1/2}$
3.	Form factor (FF)	$FF = \frac{\pi}{2\sqrt{2}\cos\alpha}$	$FF = E_{rms}/E_{DC}$
4.	Harmonic factor (HF)	$HF = \left[\frac{\pi^2}{8} - 1\right]$	$HF = \left[\frac{\pi(\pi-\alpha)}{4(1+\cos\alpha)} - 1\right]^{1/2}$

PART-4

Three Phase Half Wave Converter.

Questions-Answers

Long Answer Type and Medium Answer Type Questions

Que 3.16. **Explain operation of 3ϕ half wave converters.**

Answer

1. The circuit diagram of the three-phase half wave circuit is shown in Fig. 3.16.1.

2. Among the three phase, the one which has the highest positive voltage with respect to neutral will conduct if the thyristors connected to that phase is triggered.

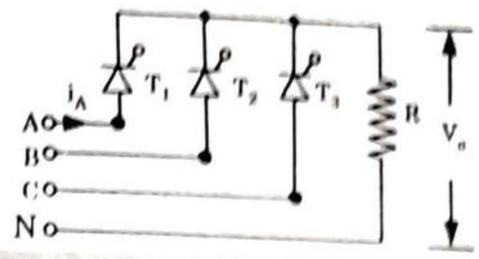

Fig. 3.16.1. Three-phase half wave controlled rectifier with resistive load.

3. No SCR can be triggered below a phase angle of 30° because it remains reverse biased by the other conducting phase. Hence the minimum firing angle is π/6.

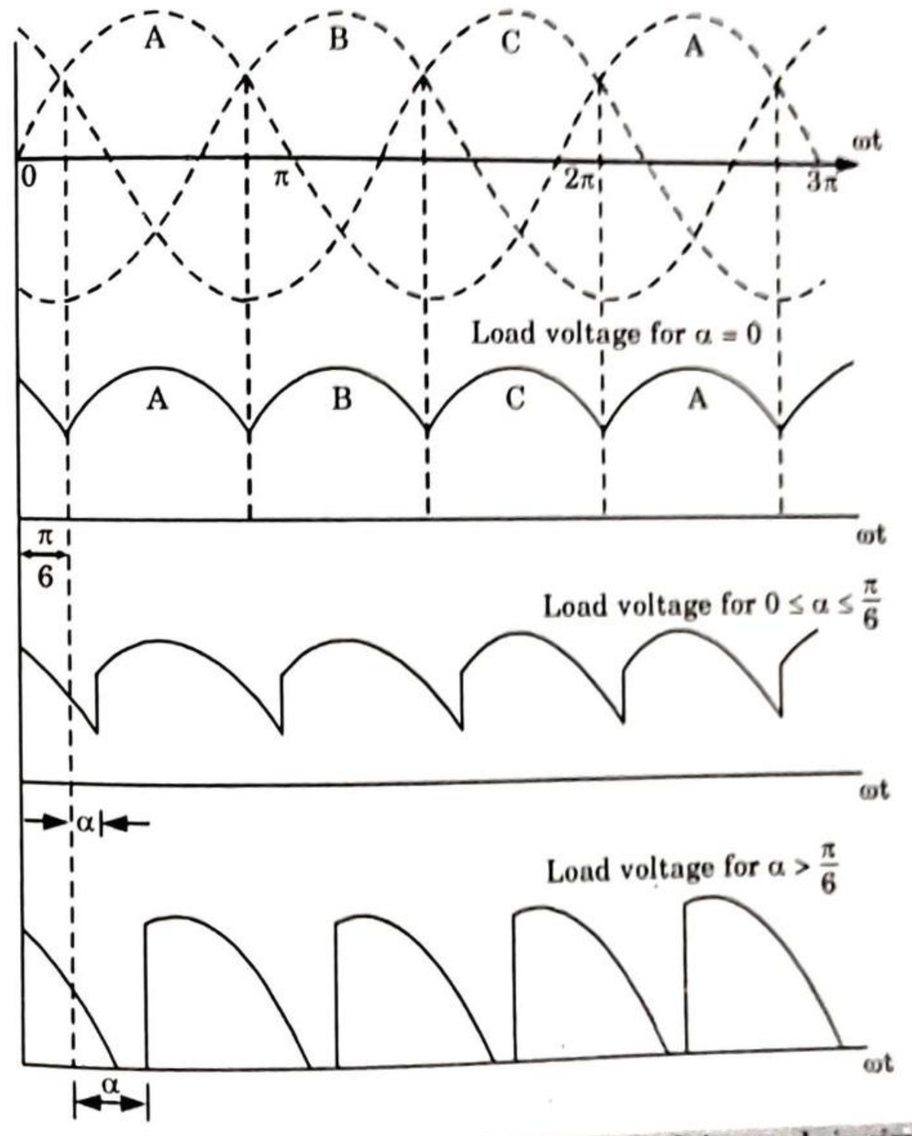

Fig. 3.16.2. Waveforms of load voltage for various firing angle in circuit.

Scanned by TapScanner

4. When the firing angle is retarded, the conduction period of the same SCR is extended towards the end of the cycle and at the firing angle of 60°, the SCR would continue to conduct up to 180° which is the maximum angle through which it can conduct, after which the phase voltage becomes negative with respect to the neutral. Therefore, the maximum value of the conduction angle of an SCR is 120°.

5. If the firing angle is more than π/3, the conduction angle is less than 120° and the output voltage and current are discontinuous pulses.

6. For a firing angle α from 0° to π/6, the load current is continuous.

7. Average load voltage

$$V_o = \frac{3\sqrt{2}E}{2\pi}\int_{\alpha}^{2\pi/3+\alpha} \sin\left(\omega t + \frac{\pi}{6}\right) d(\omega t)$$

$$= \frac{3}{\sqrt{2\pi}} E\left[\cos(\alpha + \pi/6) - \cos\left(\alpha + \frac{5\pi}{6}\right)\right]$$

$$= \frac{3\sqrt{3}E}{\sqrt{2}\,\pi}\cos\alpha \qquad ...(3.16.1)$$

for $0 \le \alpha \le \pi/6$ (Continuous conduction)

Again,

$$V_o = \frac{3\sqrt{2}E}{2\pi}\int_{\alpha}^{5\pi/6} \sin\left(\omega t + \frac{\pi}{6}\right) d(\omega t)$$

$$= \frac{3E}{\sqrt{2\pi}}\left\{1 + \cos\left(\alpha + \frac{\pi}{6}\right)\right\}$$

for $\pi/6 \le \alpha \le 5\pi/6$ (Discontinuous conduction)

where E = Rms value of voltage

PART-5

Three Phase Fully Controlled and half controlled Bridge Converters.

Questions-Answers

Long Answer Type and Medium Answer Type Questions

Que 3.17. **Discuss operation of 3ϕ half bridge converters.**

Answer

1. The circuit diagram of the three-phase half-controlled bridge is shown in Fig. 3.17.1.

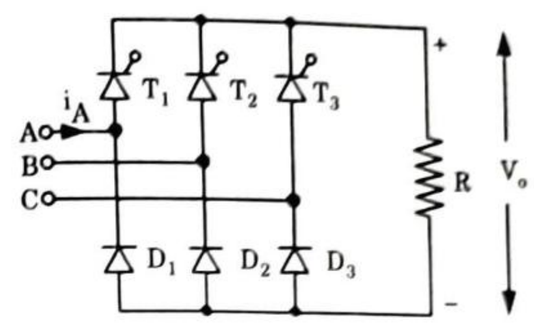

Fig. 3.17.1. Three-phase half-controlled bridge rectifier with resistive load.

2. Three diodes and thyristors D_1, D_2, D_3 and T_1, T_2, T_3 constitute a 3ϕ half controlled bridges. The output voltage is controlled by varying firing angle of thyristors.

3. The average output voltage is calculated with respect to line-to-line voltage E. The firing angle α is taken to be zero from 60° because any vector of the line-to-line voltage cannot be fired less than 60°.

$$V_o = \frac{3\sqrt{2}E}{2\pi}\left[\int_{\alpha}^{\pi/3} \sin\left(\omega t + \frac{\pi}{6}\right) d(\omega t) + \int_{0}^{\pi/3+\alpha} \sin\left(\omega t + \frac{\pi}{3}\right) d(\omega t)\right]$$

$$= \frac{3\sqrt{2}E}{2\pi}(1 + \cos\alpha)$$

for $0 \le \alpha \le \pi/3$ (Continuous conduction)

Again

$$V_o = \frac{3\sqrt{2}E}{2\pi}\int_{\alpha'}^{2\pi/3} \sin(\omega t + 3)\, d(\omega t)$$

$$= \frac{3E}{\sqrt{2\pi}}\left[1 + \cos\left(\alpha' + \frac{\pi}{3}\right)\right]$$

for $0 \le \alpha' \le \pi/3$ (Discontinuous conduction)

Total delay angle $\alpha = \alpha' + \pi/3$

4. Average load current

$$I_o = V_o / R = \frac{3E}{\sqrt{2\pi}R}(1 + \cos\alpha)$$

for $0 \le \alpha \le \pi/3$ (Continuous conduction)

and

$$I_o = \frac{3E}{\sqrt{2\pi}R}\left[1 + \cos\left(\alpha' + \frac{\pi}{3}\right)\right]$$

for $0 \le \alpha' \le 2\pi/3$ (Discontinuous conduction)

Scanned by TapScanner

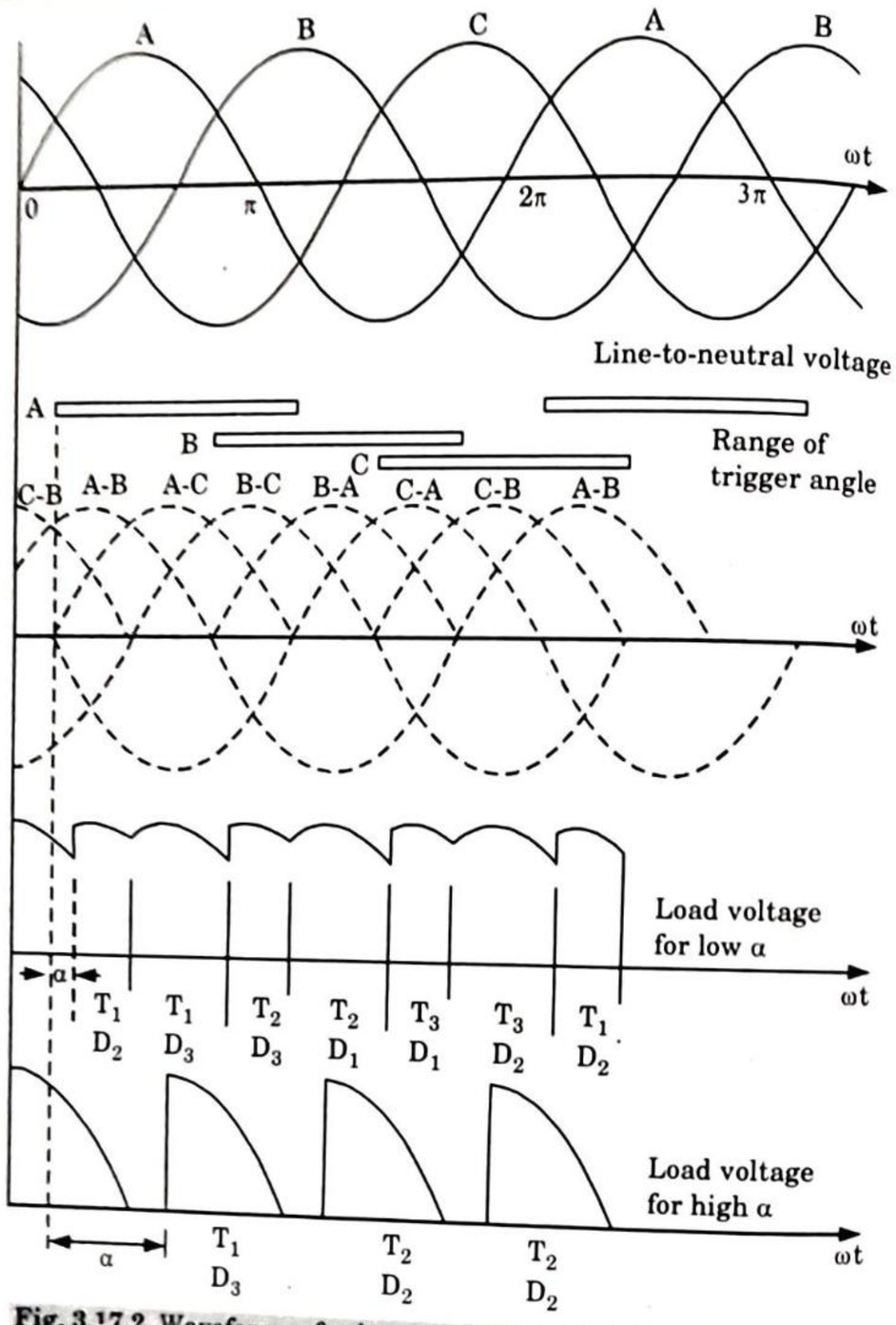

Fig. 3.17.2. Waveforms of voltage for various firing angles in circuit.

Que 3.18. **Explain operation of 3ϕ full wave bridge converters.**

Answer

1. Three-phase fully controlled bridge rectifier with resistive load is shown in Fig. 3.18.1.
2. For six-pulse operation, each SCR has to be fired twice in its conduction cycle, that is firing intervals should be 60°.

3. As shown in Fig. 3.18.1, there are six line to line phasor, each having a maximum conduction angle of 60°.

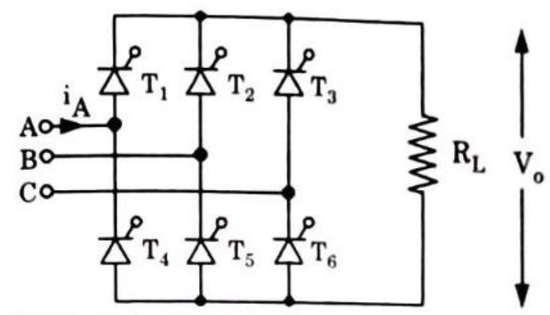

Fig. 3.18.1. 3-phase fully controlled bridge rectifier with resistive load.

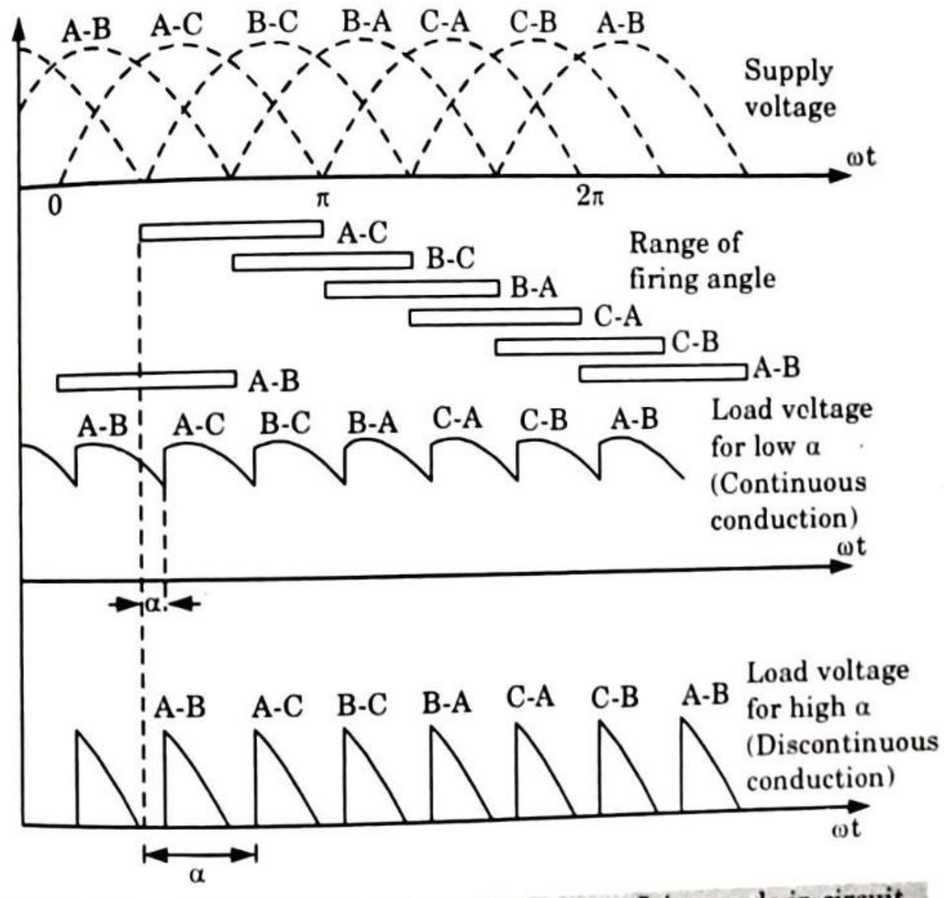

Fig. 3.18.2. Waveforms of voltage for various firing angle in circuit.

4. Average load voltage

$$V_o = \frac{6}{2\pi}\sqrt{2}E\int_{\alpha}^{\pi/3+\alpha}\sin\left(\omega t+\frac{\pi}{3}\right)d(\omega t)$$

$$= \frac{3\sqrt{2}}{\pi}E\cos\alpha$$

for $0 \le \alpha \le \pi/3$ (Continuous conduction)

Scanned by TapScanner

and $$V_o = \frac{6}{2\pi}\sqrt{2}E\int_{\alpha}^{2\pi/3}\sin\left(\omega t + \frac{\pi}{3}\right) d(\omega t)$$

$$= \frac{3\sqrt{2}E}{\pi}\left[1 + \cos\left(\alpha + \frac{\pi}{3}\right)\right]$$

for $\pi/3 \le \alpha \le 2\pi/3$ (for discontinuous conduction)

5. Average load current

$$I_o = \frac{V_o}{R_L} = \frac{3\sqrt{2}}{\pi}\frac{E}{R_L}\cos\alpha$$

(for continuous conduction)

and $$I_o = \frac{V_o}{R_L} = \frac{3\sqrt{2}E}{\pi}\left[1 + \cos\left(\alpha + \frac{\pi}{3}\right)\right]$$

(for discontinuous conduction)

PART-6

Effect of Source Impedance.

Questions-Answers

Long Answer Type and Medium Answer Type Questions

Que 3.19. **Discuss the working of 1ϕ full wave AC to DC converter taking into account the effect of source inductance. Draw the output waveform for firing angle of 30°.** **AKTU 2014-15, Marks 10**

Answer

1. In the single phase converter, we consider L_s as the source inductance. The load current is assumed constant.
2. When terminal 1 of source voltage V_s is positive in Fig. 3.19.1(*a*), current i_1 flows through L_s, T_1, load and T_2.
3. When terminal 2 of V_s is positive, load current i_2 flows through T_3, load, T_4.

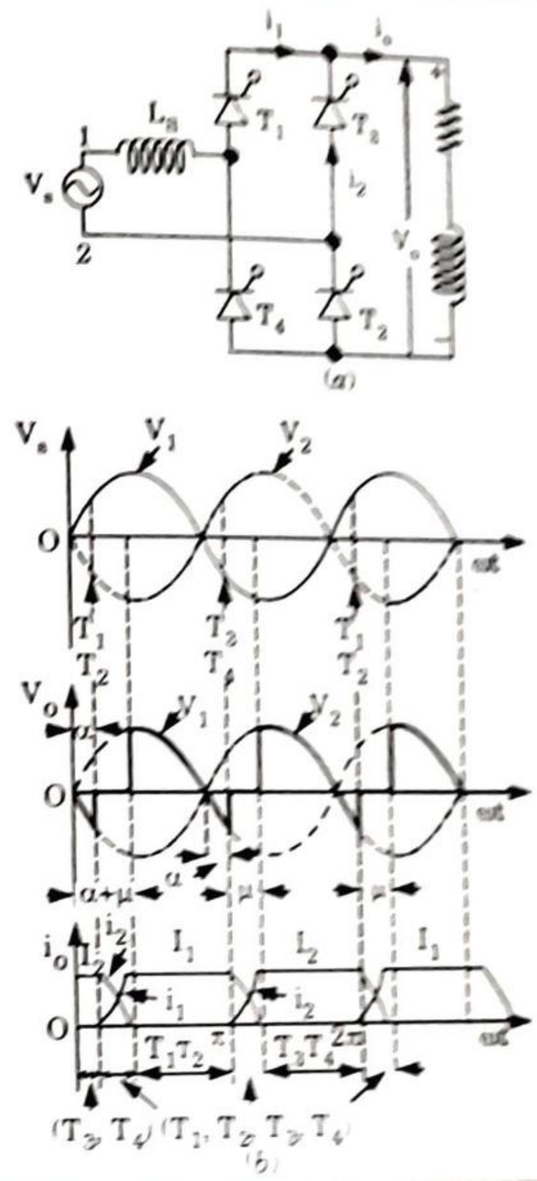

Fig. 3.19.1. (*a*) Single-phase full converter with source inductance L_s. (*b*) typical current and voltage waveforms with L_s (for α = 30°).

4. When T_1, T_2 are triggered at a firing angle, the commutation of already conducting thyristors T_3, T_4 begins.
5. Because of the presence of source inductance L_s, the current through outgoing devices T_3, T_4 decreases gradually to zero from its initial value of I_o; whereas in incoming thyristors T_1, T_2; the current builds up gradually from zero to full value of load current I_o.
6. The average value of output voltage is given by :

$$V_1 - L_s\frac{di_1}{dt} = V_2 - L_s\frac{di_2}{dt}$$

$$V_1 - V_2 = L_s\left[\frac{di_1}{dt} - \frac{di_2}{dt}\right] \quad ...(3.19.1)$$

$$V_1 = V_m \sin\omega t,\ V_2 = -V_m \sin\omega t \quad ...(3.19.2)$$

Scanned by TapScanner

$$L_s\left(\frac{di_1}{dt} - \frac{di_2}{dt}\right) = 2V_m \sin \omega t \quad ...(3.19.3)$$

$$i_1 + i_2 = I_o \quad ...(3.19.4)$$

$$\frac{di_1}{dt} + \frac{di_2}{dt} = 0 \quad ...(3.19.5)$$

7. From eq. (3.19.3), $\frac{di_1}{dt} - \frac{di_2}{dt} = \frac{2V_m}{L_s} \sin \omega t$ ...(3.19.6)

8. From eq. (3.19.5) and (3.19.6), $\frac{di_1}{dt} = \frac{V_m}{L_s} \sin \omega t$ ...(3.19.7)

at $\omega t = \alpha, i = 0$

at $\omega t = \alpha + m, i_1 = I_o$

From eq. (3.19.7),

$$\int_0^{I_o} di_1 = \frac{V_m}{L_s} \int_{\alpha/\omega}^{\frac{\alpha+m}{\omega}} \sin \omega t \, dt$$

$$I_o = \frac{V_m}{\omega L_s} [\cos \alpha - \cos (\alpha + \mu)] \quad ...(3.19.8)$$

9. Then

$$V_o = \frac{V_m}{\pi} \int_{\alpha+\mu}^{\alpha+\pi} \sin \omega t \, d\omega t$$

$$= \frac{V_m}{\pi} [\cos (\alpha + \mu) - \cos (\alpha + \pi)]$$

$$= \frac{V_m}{\pi} [\cos \alpha + \cos (\alpha + \mu)] \quad ...(3.19.9)$$

From eq. (3.19.8),

$$\cos (\alpha + m) = \cos \alpha - \frac{\omega L_s}{V_m} I_o$$

Putting in eq. (3.19.9),

$$V_o = \frac{2V_m}{\pi} \cos \alpha - \frac{\omega L_s}{\pi} I_o$$

Que 3.20. **Discuss the effect of source inductance on the performance of a three-phase full converter with the help of phase voltage waveforms. Indicate the sequence of conduction of various thyristors and sketch load current waveforms. Derive an expression for its output voltage in terms of supply voltage, source inductance, load current etc.**

AKTU 2015-16, Marks 15

Answer

1. The effect of source inductance L_s is to reduce the average DC output voltage.

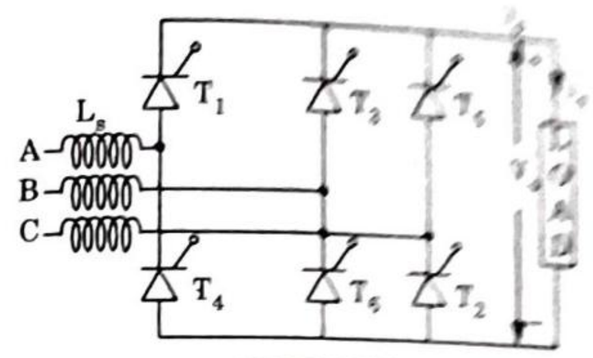

Fig. 3.20.1.

2. The conduction of various SCRs with firing angle $\alpha = 0°$ and overlap angle $\mu = 0$ is shown in Fig. 3.20.2.

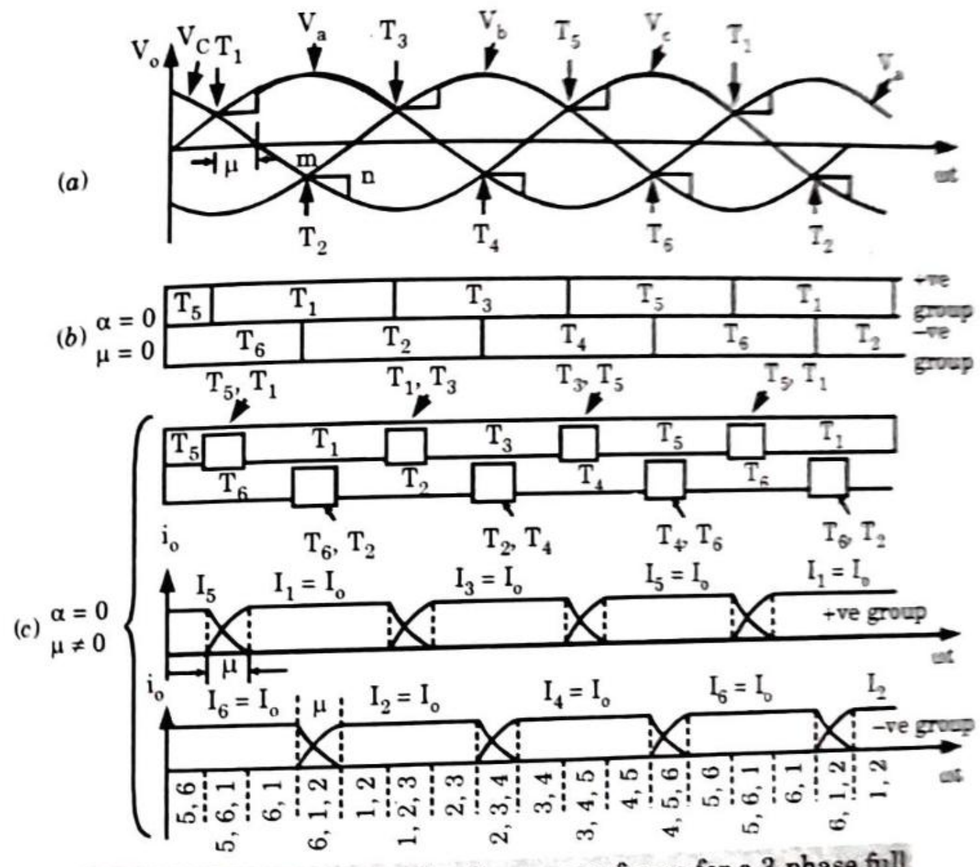

Fig. 3.20.2. Current and voltage waveforms for a 3-phase full converter showing commutation during overlap.

3. In this T_5, T_6 conduct up to $\omega t = 30°$. From $\omega t = 30°$ to $90°$, T_1, T_6 conduct. From $\omega t = 90°$ to $150°$, T_1, T_2 conduct and so on.

4. Average value of fall in output voltage due to voltage drop,

$$= \frac{3}{\pi}\int_0^{\mu} v_L d(\omega t) = \frac{3}{\pi}\int_0^{\mu} L_s \frac{di}{dt} d(\omega t)$$

Scanned by TapScanner

$$= \frac{3L_s}{\pi}\int_0^{\omega/\omega} L_s \frac{di}{dt}dt = \frac{3\omega L_s}{\pi}\int_0^{I_0} di$$

$$= \frac{3\omega L_s I_0}{\pi}$$

5. Output voltage with no overlap = internal voltage of the 3-phase full converter

$$= \frac{3V_{ml}}{\pi}\cos\alpha$$

6. Output voltage with overlap,

$$V_o = \frac{3V_{ml}}{\pi}\cos\alpha - \frac{3\omega L_s}{\pi}I_0$$

Output voltage for a 3-phase full converter,

$$V_o = \frac{3V_{ml}}{\pi}\cos(\alpha+\mu) + \frac{3\omega L_s}{\pi}I_0$$

PART-7

Single Phase and Three Phase Dual Converter.

Questions-Answers

Long Answer Type and Medium Answer Type Questions

Que 3.21. **Explain the operation of ideal dual converter.**

Answer

1. Assume that the dual converter consists of two ideal converters and that there is no ripple in their output voltages. Such a dual converter can be represented by an equivalent circuit shown in Fig. 3.23.1(*a*).
2. V_{o1} and V_{o2} are the magnitudes of average output voltages of converters 1 and 2 respectively.
3. Diodes D_1 and D_2 shown here in series with the DC voltages sources V_{o1} and V_{o2} indicate the unidirectional flow of current. The current in load circuit can, however, flow in either direction.
4. The firing angles of both the converters are controlled in such a manner that their average output voltages are equal in magnitude and have the same polarity. This can happen only if one converter is operating as a rectifier and the other as an inverter.
5. The average output voltages for both single phase and 3-phase converter are of the form.

$$V_{o1} = V_{max}\cos\alpha_1 \quad ...(3.21.1)$$

and

$$V_{o2} = V_{max}\cos\alpha_2 \quad ...(3.21.2)$$

where, for a single phase full converter, $V_{max} = (2V_m/\pi)$

and for a three phase full converter, $V_{max} = (3V_m/\pi)$

6. Under normal operation, V_{o1} has upper positive and lower negative polarities and V_{o2} has upper negative and lower position polarities in Fig. 3.21.2 (*a*) and (*b*).
7. It is assumed that the two converters have their average output voltages equal in magnitude. Their output voltages would have the same polarity only if polarity of V_{o2} is reversed.
8. In other words, their average output voltage V_o can be expressed as

$$V_o = V_{o1} = -V_{o2} \quad ...(3.21.3)$$

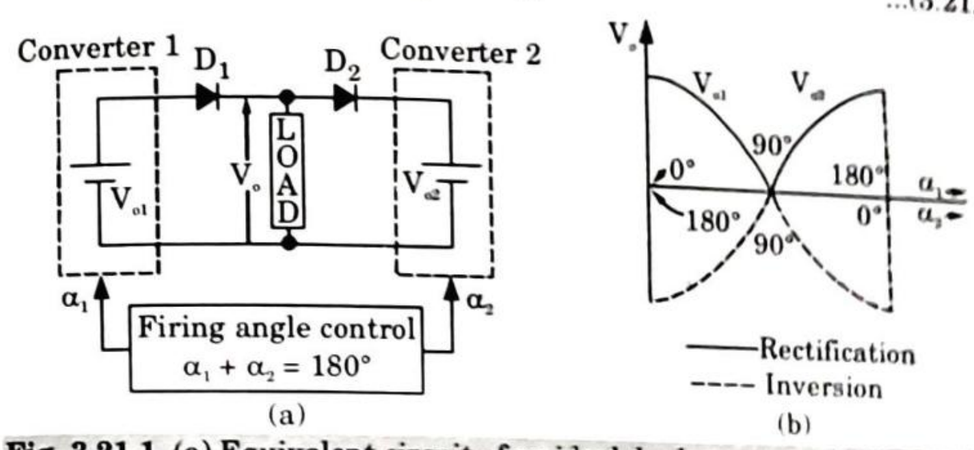

Fig. 3.21.1. (a) Equivalent circuit of an ideal dual converter, (b) Variation of terminal voltage for an ideal dual converter with firing angle.

9. Substitution of V_{o1} and V_{o2} from eq. (3.23.1) and (3.23.2) in eq. (3.23.3) gives,

$$V_{max}\cos\alpha_1 = -V_{max}\cos\alpha_2$$

$$\cos\alpha_1 = -\cos\alpha_2 = \cos(180-\alpha_2)$$

$$\alpha_1 + \alpha_2 = 180° \quad ...(3.21.4)$$

$$\cos\alpha_1 = -\cos\alpha_2 = \cos(180+\alpha_2)$$

$$\alpha_1 = 180° + \alpha_2 \quad ...(3.21.5)$$

10. **The dual converter can be operated in two different modes of operation :**

i. **Non-circulating current mode of operation :** In this mode only one converter is operated at a time.

ii. **Circulating current mode of operation :** In this mode, both the converters are switched ON and operated at the same time.

Scanned by TapScanner

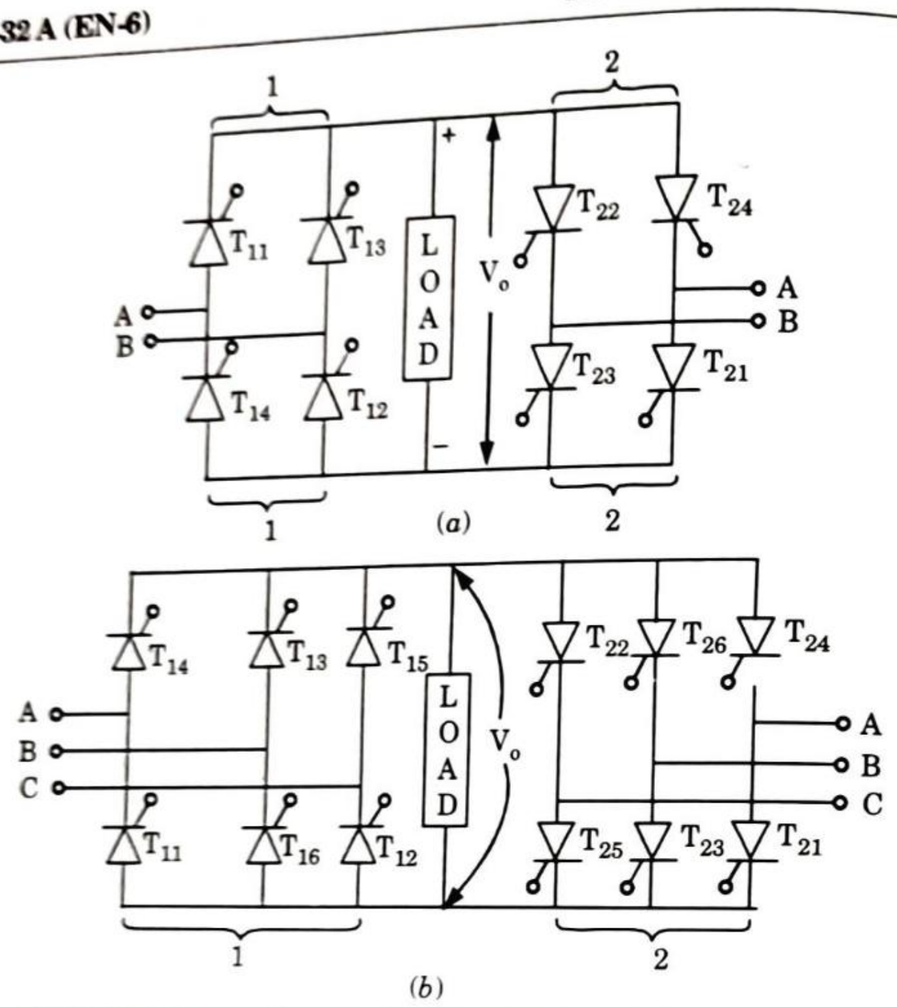

Fig. 3.21.2. Non circulating type (*a*) Single phase dual converter (*b*) Single-phase dual converter

11. When $0 < \alpha_1 < 90°$, converter 1 operates as a controlled rectifier and converter 2 operates as an inverter with $90° < \alpha_2 < 180°$. In this case V_{DC} and I_{DC} both are positive.
12. When $90° < \alpha_1 < 180°$, converter 1 operates as an inverter and converter 2 operated as a controlled rectifier by adjusting its trigger angle α_2 such that $0 < \alpha_2 < 90°$.

Que 3.22. **What are dual converters ? Explain the operation of three-phase dual converter using circulating current mode of operation. How are firing angles of two converters controlled ?**

AKTU 2016-17, Marks 15

AKTU 2014-15, Marks 10

Answer

A. **Dual Converter :** It is an electronic device or circuit made by the combination of two bridges one of them works as rectifier and other bridge works as inverter.

B. 3ϕ dual converter with circulating current :

1. In the circulating current mode of dual converter, a reactor is inserted in-between converters 1 and 2 as shown in Fig. 3.22.1. This reactor is called limiter reactor.
2. It limits the magnitude of circulating current to a reasonable value.

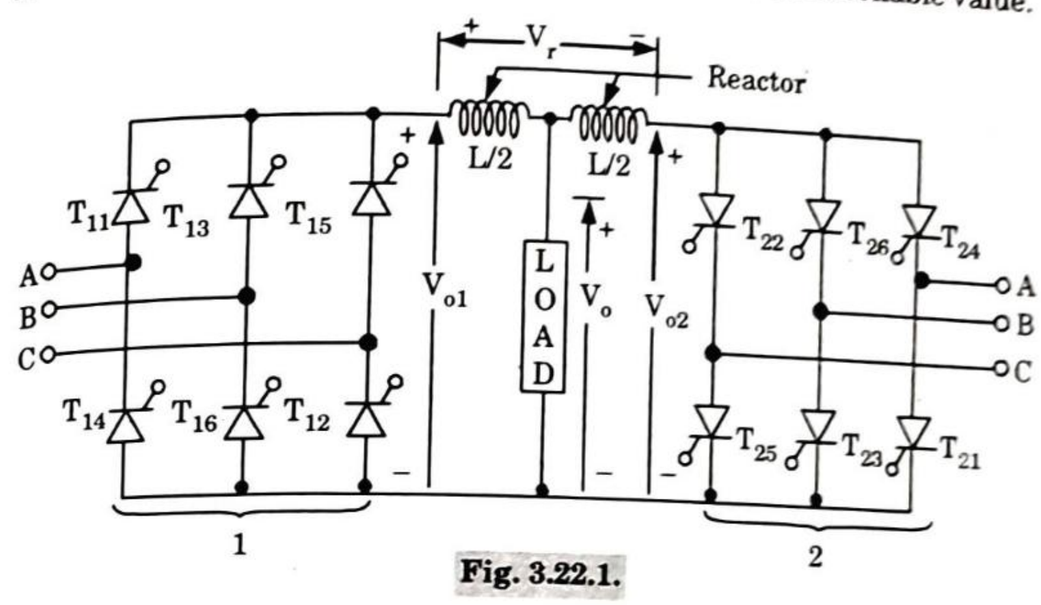

Fig. 3.22.1.

3. Firing pulses of the two converters are so adjusted that $\alpha_1 + \alpha_2 = 180°$.
4. For this converter 1 worked as rectifier and converter 2 as inverter. Though the output voltage at the terminals of both converters 1 and 2 has the same average value but instantaneous output voltage waveform shown in Fig. 3.22.2, as V_{o1} and V_{o2}. Due to this a circulating current flows between the two converters.
5. This circulating current is limited by the reactor. If the load current is to be reversed, the role of two converters is interchanged. This means that converter 1 is now made to act as inverter by making its firing angle greater that 90° and converter 2 is made to work as rectifier by making its firing angle α_2 less than 90° such that $\alpha_1 + \alpha_2 = 180°$.
6. The load voltage v_o is equal to the average value of the instantaneous converter output voltages v_{o1} and v_{o2}, *i.e.*,

$$v_o = \frac{v_{o1} + v_{o2}}{2} \quad \text{...(3.22.1)}$$

At $\omega t = 0°$, $$v_o = \frac{V_{ml} \sin 60° + 0}{2} = 0.433\, V_{ml}$$

At $\omega t = 30°$, $$v_o = \frac{V_{ml} \sin 30° + V_{ml} \sin 30°}{2} = 0.5\, V_{ml}$$

At $\omega t = 60°$, $$v_o = \frac{0 + V_{ml} \sin 60°}{2} = 0.433\, V_{ml}$$ and so on.

Scanned by TapScanner

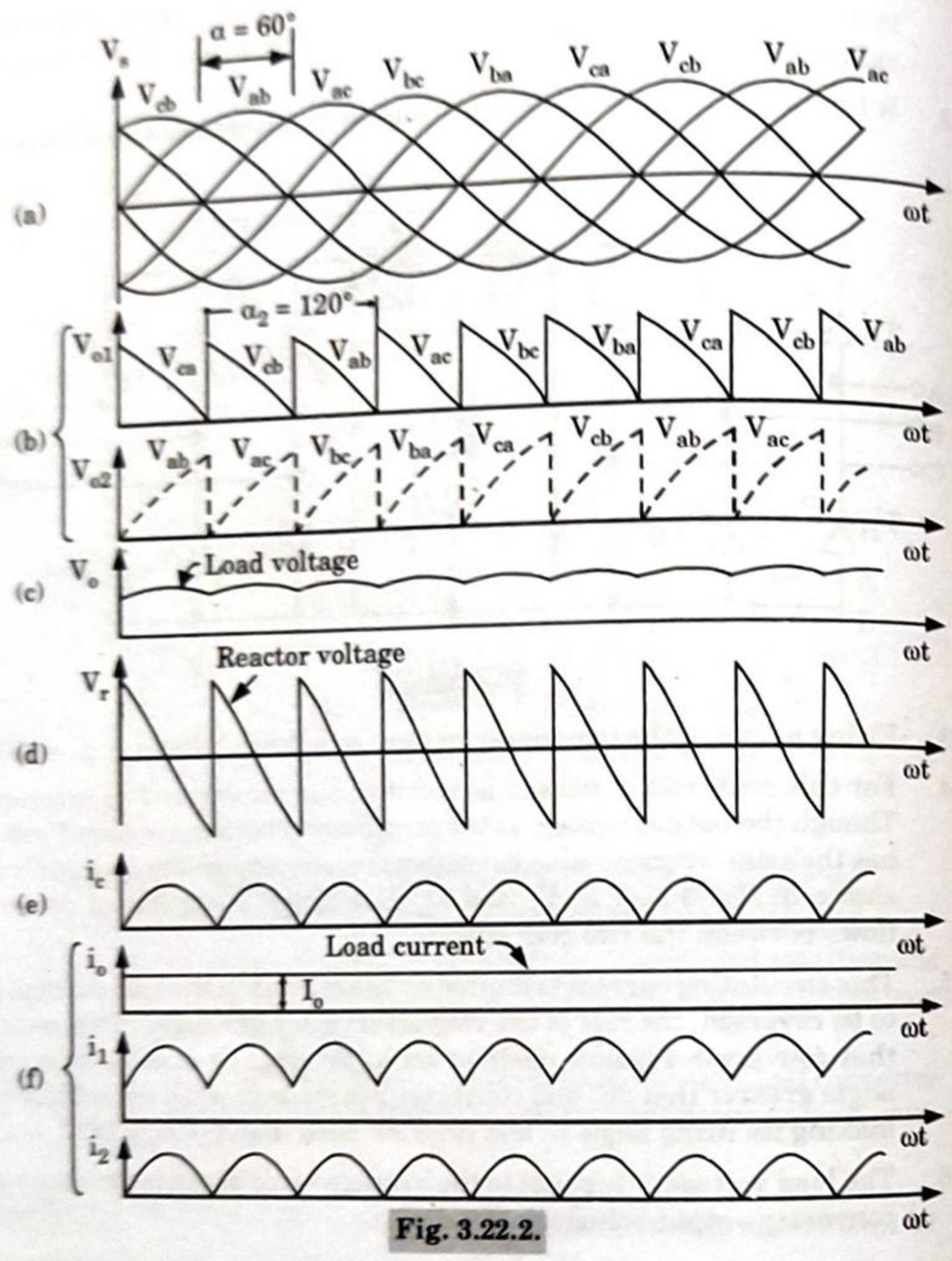

Fig. 3.22.2.

7. The reactor voltage v_r is equal to the difference of converter output voltages v_{o1} and v_{o2}, *i.e.*

$$v_r = v_{o1} - v_{o2} \quad ...(3.22.2)$$

At $\omega t = 0°$, $v_r = V_{ml} \sin 60° - 0 = 0.866\, V_{ml}$

At $\omega t = 30°$, $v_r = V_{ml} \sin 30° - V_{ml} \sin 30° = 0$

At $\omega t = 60°$, $v_r = 0 - V_{ml} \sin 60° = -0.866\, V_{ml}$

and so on. The variation of reactor voltage v_r is plotted in Fig. 3.22.3

Now $$v_r = L \frac{di_c}{dt}$$

where i_c is the circulating current through both the converters and inductor.

Que 3.23. Discuss the single phase dual converter under circulating current conduction mode of operation and derive the expression for inductor voltage. **AKTU 2013-14, Marks 10**

Answer

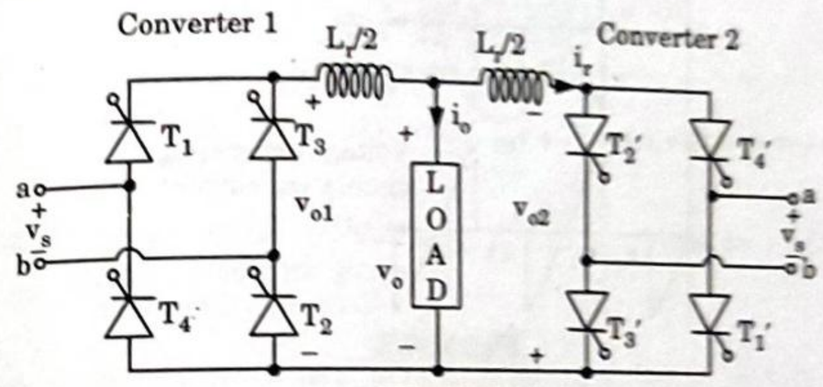

Fig. 3.23.1.

1. Let V_{o1} = Instantaneous output voltage of converter 1.

V_{o2} = Instantaneous output voltage of converter 2.

2. $$i_r = \frac{1}{\omega L_r}\left[\int_{2\pi-\alpha_1}^{\omega t} v_r \, d\,\omega t\right]; \; v_r = v_{o1} - v_{o2}$$

As the output voltage v_{o2} is negative

$$v_r = v_{o1} + v_{o2}$$

$$i_r = \frac{1}{\omega L_r}\left[\int_{2\pi-\alpha_1}^{\omega t} (v_{o1} + v_{o2})\, d\,\omega t\right];$$

$$= \frac{V_m}{\omega L_r}\left[\int_{2\pi-\alpha_1}^{\omega t} -\sin \omega t \, d\,\omega t - \int_{2\pi-\alpha_1}^{\omega t} -\sin \omega t \, d\,\omega t\right]$$

$$i_r = \frac{2V_m}{\omega L_r}(\cos \omega t - \cos \alpha_1)$$

Inductor voltage $= \omega L\, i_r$.

$$= 2V_m (\cos \omega t - \cos \alpha_1)$$

Scanned by TapScanner

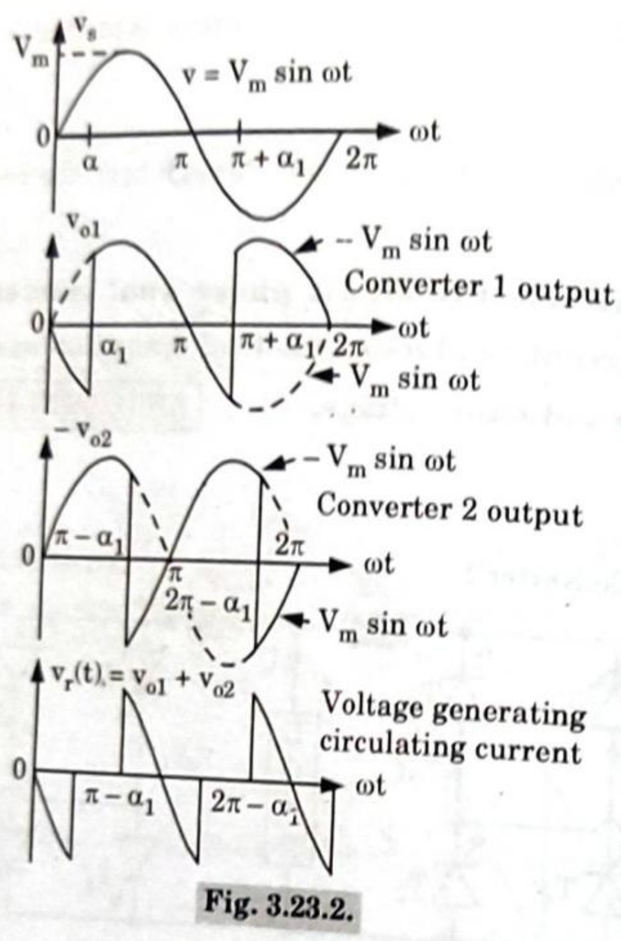

Fig. 3.23.2.

☺☺☺

4 UNIT

AC Voltage Controllers and Cycloconverters

CONTENTS

Part-1 : Principle of ON-OFF and Phase Controls ..... **4–2A to 4–7A**

Part-2 : Single Phase AC Voltage Controller with Resistive and Inductive Load ..... **4–7A to 4–12A**

Part-3 : Sequence Control of AC Voltage Controller ..... **4–13A to 4–16A**

Part-4 : Introduction of Matrix Converter ..... **4–16A to 4–18A**

Part-5 : Basic Principle of Operation of Cycloconverter and Single Phase to Single Phase Cycloconverter ..... **4–18A to 4–24A**

Part-6 : Three Phase to Single Phase Output Voltage Equation ..... **4–24A to 4–30A**

Scanned by TapScanner

PART-1

Principle of ON-OFF and Phase Controls.

CONCEPT OUTLINE

- **AC voltage controllers :** AC voltage controllers are thyristor based devices which convert fixed alternating voltage directly to variable alternating voltage without a change in the frequency.

Questions-Answers

Long Answer Type and Medium Answer Type Questions

Que 4.1. **Explain the principle of ON-OFF control with the help of waveform.**

OR

Define integral cycle control.

OR

Write a short note on integral cycle control in AC controller.

AKTU 2015-16, Marks 05

Answer

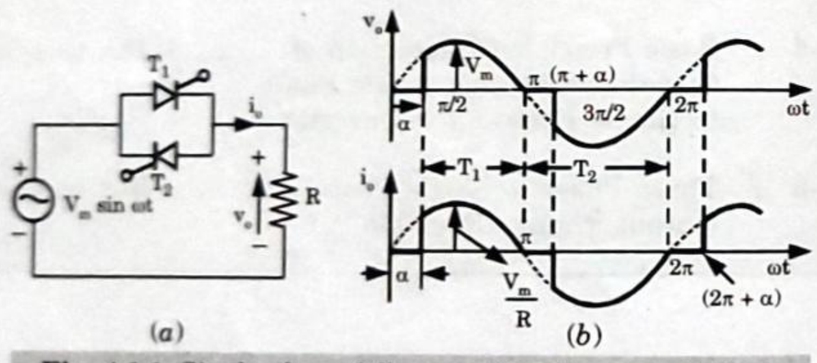

Fig. 4.1.1. Single-phase full-wave AC voltage controller : (*a*) Circuit diagram and (*b*) Voltage and current waveforms.

1. If control is achieved by connecting the load to source for some ON-cycles and then disconnecting the load for some OFF-cycles, then this form of power control is called integral cycle control.
2. Consider a single phase voltage controller with resistive load is shown in Fig. 4.1.1.

3. Gate pulses i_{g1}, i_{g2} turn ON the thyristors T_1, T_2 respectively at zero-voltage crossing of the supply voltage. The source energises the load for $n(= 3)$ cycles.
4. When gate pulses are withdrawn, load remains OFF for m (= 2) cycles.
5. In this manner, process of turn-ON and turn-OFF is repeated for the control of load power.
6. By varying the number of n and m cycles, power delivered to load can be regulated as desired.
7. The waveforms for source voltage v_s, gate pulses and output voltage v_o are shown in Fig. 4.1.2.

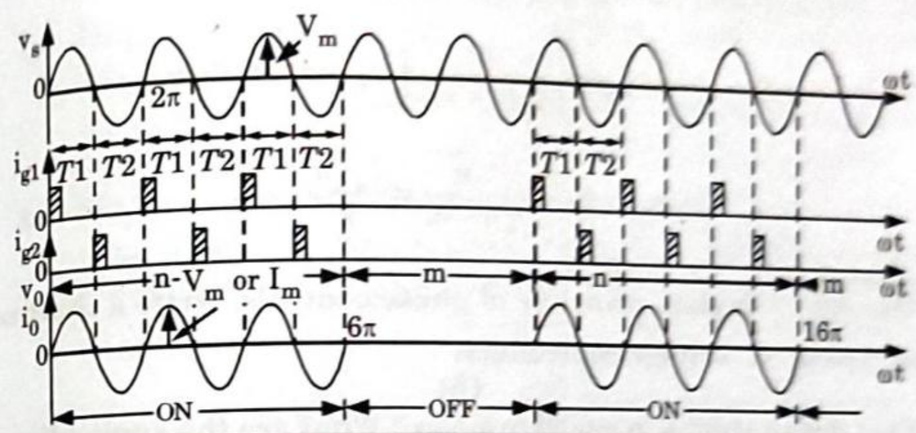

Fig. 4.1.2. Waveforms pertaining to intergal cycle control.

8. For sinusoidal supply voltage, the rms value of output voltage V_{or} can be obtained as under :

$$V_{or} = \left[\frac{n}{2\pi(n+m)}\int_0^{2\pi} V_m^2 \sin^2 \omega t \, d(\omega t)\right]^{1/2}$$

$$= \left[\frac{n V_m^2}{4\pi(n+m)}\int_0^{2\pi} (1 - \cos 2\omega t)\, d(\omega t)\right]^{1/2}$$

$$V_{or} = \frac{V_m}{\sqrt{2}}\sqrt{\frac{n}{n+m}} = V_s\sqrt{\frac{n}{n+m}} = V_s\sqrt{k} \qquad ...(4.1.1)$$

where V_s = Rms value of source voltage

and $k = \dfrac{n}{n+m}$ is the duty cycle of AC voltage controller.

9. Rms load current, $I_{or} = \dfrac{V_{or}}{R}$

10. Power delivered to load $= \dfrac{V_{or}^2}{R} = \dfrac{V_s^2}{R}\left(\dfrac{n}{n+m}\right) = \dfrac{k V_s^2}{R}$

Scanned by TapScanner

11. $$\text{Input pf} = \frac{V_{or}}{V_s} = \sqrt{\frac{n}{n+m}} = \sqrt{k}$$

12. As each thyristor conducts for π radians during each cycles of n ON cycles, the average value of thyristor current is given by

$$I_{TA} = \frac{n}{2\pi(n+m)} \int_0^{\pi} I_m \sin \omega t \, d(\omega t)$$

$$= \frac{I_m}{\pi} \frac{n}{m+n} = \frac{kI_m}{\pi}$$

13. Similarly, rms value of thyristor current is

$$I_{TR} = \left[\frac{n}{2\pi(n+m)} \int_0^{\pi} I_m^2 \sin^2 \omega t \, d(\omega t) \right]^{1/2}$$

$$= \frac{I_m}{2} \sqrt{\frac{n}{n+m}} = \frac{I_m \sqrt{k}}{2}$$

Que 4.2. **Explain principle of phase controls. Write a short note on type of AC voltage controllers.**

OR

What does a voltage controller mean ? What are the applications of AC voltage controllers ? **AKTU 2017-18, Marks 10**

Answer

A. **AC voltage controllers :** They are thyristor based devices which convert fixed alternating voltage directly to variable alternating voltage without a change in the frequency.

B. **Principle of phase control :** In phase control, the phase relationship between load current and supply voltage is controlled by varying the firing angle.

C. **Types of AC voltage controllers :**

a. **Single-phase half wave AC voltage controller :**

1. It is using one thyristor in antiparallel with one diode as shown in Fig. 4.2.1(*a*) and the load is resistive. The output voltage and current waveforms obtained from this controller is shown in Fig. 4,2.1(*b*).
2. From Fig. 4.2.1(*b*), positive half cycle is not identical with negative half cycle for both voltage and current waveforms.

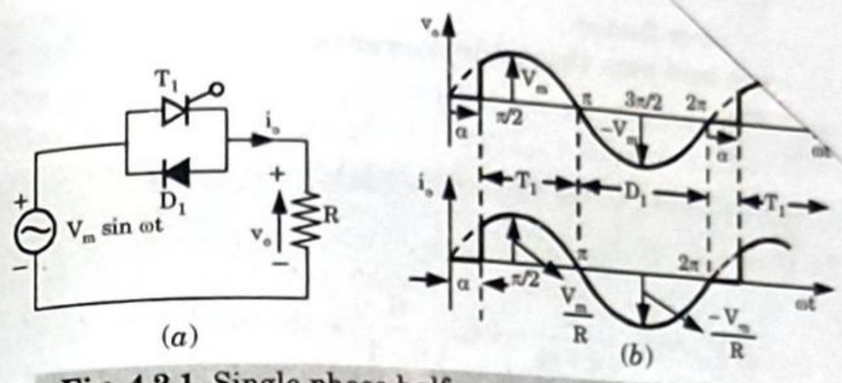

Fig. 4.2.1. Single-phase half-wave AC voltage controller : (*a*) Circuit diagram and (*b*) Voltage and current waveforms.

3. Thyristor is used for positive half cycle and diode is used for negative half cycle.
4. In positive half cycle diode is reverse bias and thyristor conducts but in negative half cycle thyristor is reverse bias and diode conducts.

b. **Single-phase full wave AC voltage controllers :**

1. It is using two thyristor connected in antiparallel as shown in Fig. 4.2.2(*a*).

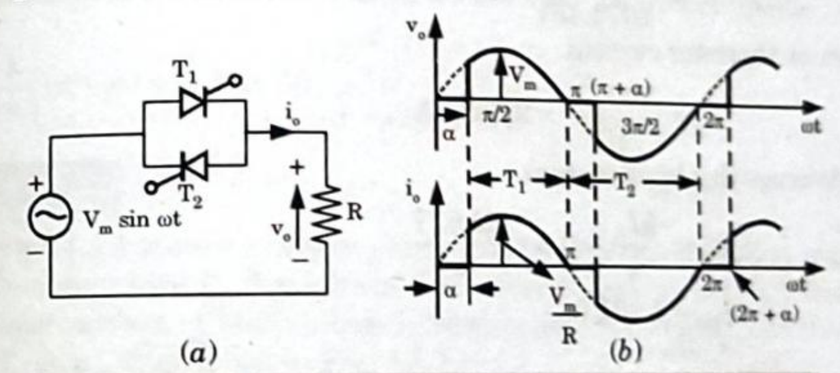

Fig. 4.2.2. Single-phase full-wave AC voltage controller : (*a*) Circuit diagram and (*b*) Voltage and current waveforms.

2. In this Fig. 4.2.2(*b*), both positive and negative half is identical. For positive half cycle T_1 works and for negative half cycle T_2 works.

D. **Applications :**

1. Domestic and industrial heating.
2. Transformer tap changing.
3. Single-phase and three-phase AC drives and starting of induction motor.
4. Lighting control.

Que 4.3. **A 1ϕ voltage controller has input voltage of 240 V, 50 Hz and a load of $R = 15\ \Omega$. For 6 cycles ON and 4 cycles OFF. Determine :**

i. **Rms output voltage.**

Scanned by TapScanner

ii. **Input power factor.**
iii. **Average and rms thyristor currents.**

Answer

Given : $V_s = 240$ V, $f_s = 50$ Hz, $R = 15\ \Omega$, $n = 6$, $m = 4$
To Find : V_{or}, pf, I_{TA}, I_{TR}.

1. $$V_{or} = V_s\sqrt{\frac{n}{n+m}} = 240\sqrt{\frac{6}{6+4}} = 185.903 \text{ V}$$

2. $$\text{Input pf} = \sqrt{\frac{n}{n+m}} = \sqrt{\frac{6}{6+4}} = 0.7746 \text{ lag}$$

3. Power delivered to load
$$= I_{or}^2 R = \frac{V_{or}^2}{R} = \frac{(185.903)^2}{15} = 2303.995 \text{ W}$$

4. $$\text{Input } VA = 240 \times \frac{240\sqrt{6}}{15\sqrt{10}} = 2974.451 \text{ VA}$$

5. $$\text{Input pf} = \frac{2303.995}{2974.451} = 0.7746 \text{ lag}$$

6. Peak thyristor current,
$$I_m = \frac{240\sqrt{2}}{15} = 22.627 \text{ A}$$

7. Average thyristor current
$$I_{TA} = \frac{kI_m}{\pi} = 0.6 \times \frac{22.627}{\pi} \qquad \left[k = \frac{n}{n+m}\right]$$
$$I_{TA} = 4.321 \text{ A}$$

8. Rms value of thyristor current, $I_{TR} = \dfrac{\sqrt{k}\, I_m}{2} = \dfrac{\sqrt{\dfrac{6}{6+4}} \times 22.627}{2}$
$$I_{TR} = 8.763 \text{ A}$$

Que 4.4. **A single phase full wave (bi-directional) AC voltage controller has resistive load $R = 10\ \Omega$ and the rms input voltage $V_s = 230$ V, 50 Hz. The thyristor switch is ON for $n = 25$ cycles and is OFF for $m = 75$ cycles.**

Determine :

i. **The rms output voltage V_{or},**
ii. **The input power factor and**
iii. **The average and rms currents of thyristors.**

AKTU 2013-14, Marks 10

Answer

The procedure is same as Q. 4.3, Page 4–5A, Unit-4.
(Ans. $V_{or} = 115$ V, Input pf = 0.5 lag, $I_{TA} = 2.5$ A and $I_{TR} = 8.06$ A)

PART-2

Single Phase AC Voltage Controller with Resistive and Inductive load.

Questions-Answers

Long Answer Type and Medium Answer Type Questions

Que 4.5. **Explain single phase AC controller with resistive loads.**

OR

Describe the principle of giving angle control for a 1ϕ AC voltage controller, for a resistive load. Show that its power factor is given by $\left[\frac{1}{\pi}\left\{(\pi - \alpha) + \frac{1}{2}\sin 2\alpha\right\}\right]^{1/2}$.

Answer

1. Fig. 4.5.1 shows a single phase voltage controller feeding power to a resistive load R. Waveforms for source voltage v_s, gating pulses i_{g1}, i_{g2} load current i_0, load voltage v_0 voltage across T_1 and v_{T1} and that across T_2 as v_{T2} are shown in Fig. 4.5.1.
2. Thyristors T_1 and T_2 are forward biased during positive and negative half cycles respectively.
3. During positive half cycle, T_1 is triggered at a firing angle α. T_1 starts conducting and source voltage is applied to load from α to π.
4. At π, both v_0, i_0 fall to zero. Just after π, T_1 is triggered at (π + α). T_2 conducts from π + α to 2π.
5. Soon after 2π, T_2 is subjected to a reverse bias, it is therefore commutated.
6. Rms value of output voltage,
$$V_{or} = \left[\frac{1}{\pi}\int_\alpha^\pi V_m^2 \sin^2 \omega t\, d\omega t\right]^{1/2} = \frac{V_m}{\sqrt{2}}\left[\frac{1}{\pi}\left\{(\pi - \alpha) + \frac{1}{2}\sin 2\alpha\right\}\right]^{1/2}$$
7. And $I_{or} = \dfrac{V_{or}}{R}$ = Rms value of load
8. The average power P delivered to load of resistance R is

Scanned by TapScanner

$$P = \frac{V_{or}}{V_s} = I_{or}^2 R = \frac{V_{or}^2}{R} = \frac{V_m^2}{2\pi R}\left[(\pi - \alpha) + \frac{1}{2}\sin 2\alpha\right]$$

$$= \frac{V_s^2}{\pi R}\left[(\pi - \alpha) + \frac{1}{2}\sin 2\alpha\right]$$

9. $$\text{pf} = \frac{\text{Real power}}{\text{Apparent power}}$$

$$\text{pf} = \frac{\frac{(V_{or})^2}{R}}{V_s I_{or}} = \frac{\frac{(V_{or})^2}{R}}{V_s \frac{(V_{or})}{R}} = \frac{V_{or}}{V_s} = \left[\frac{1}{\pi}\left\{(\pi - \alpha) + \frac{1}{2}\sin 2\alpha\right\}\right]^{1/2}$$

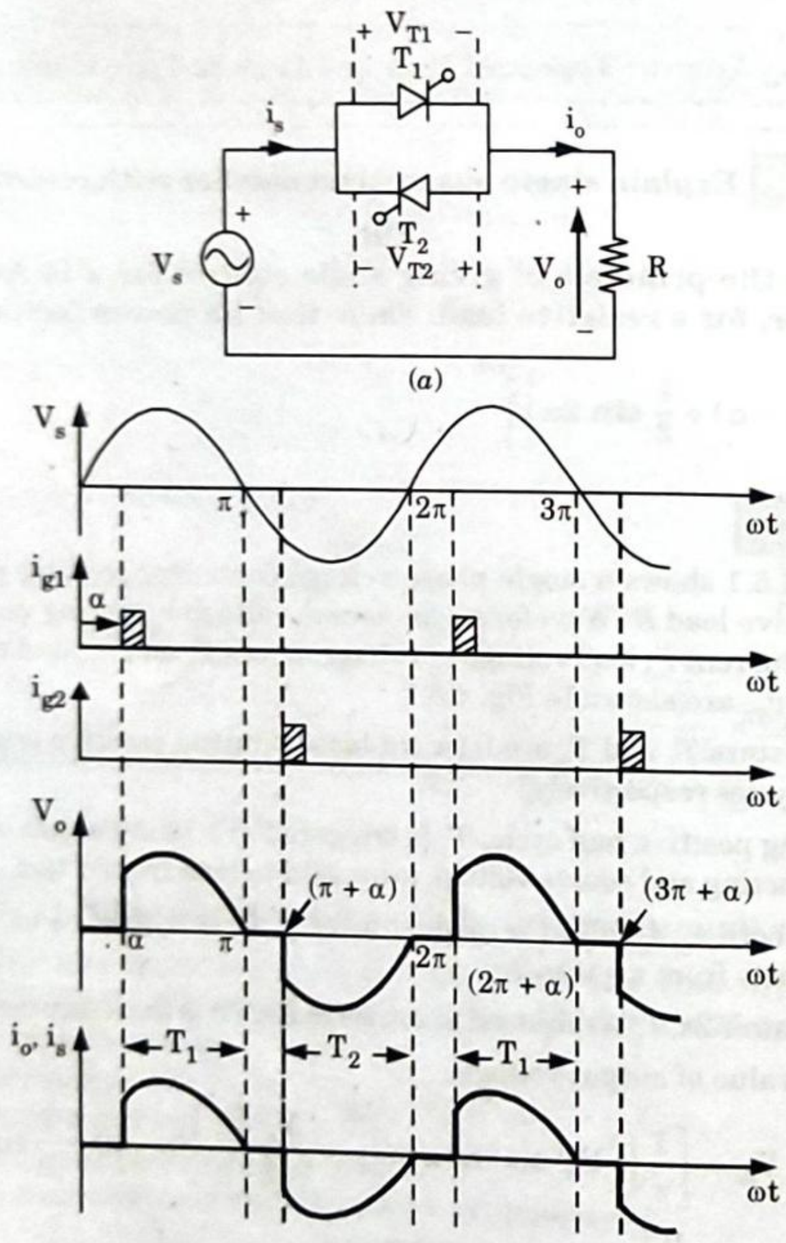

Fig. 4.5.1. 1ϕ AC voltage controller (*a*) Circuit diagram (*b*) Waveform.

Que 4.6. **Describe 1ϕ AC voltage controller with inductive and resistive loads. Describe an expression for output voltages.**

AKTU 2014-15, Marks 10

AKTU 2013-14, Marks 10

OR

Discuss the operation of a 1ϕ AC voltage controller with R-L load, when firing angle is less than or equal to load phase angle. Show that for firing angle less than load phase angle, output voltage of AC voltage controller cannot be regulated.

AKTU 2015-16, Marks 10

Answer

1. Fig. 4.6.1(*a*) shows a single-phase voltage controller with R-L load. Fig. 4.6.1(*b*) shows waveforms for source voltage v_s, gate currents i_{g1} and i_{g2}, load and source currents i_0 and i_s, load voltage v_0, voltage v_{T1} across SCR T_1 and voltage v_{T2} across thyristor T_2.

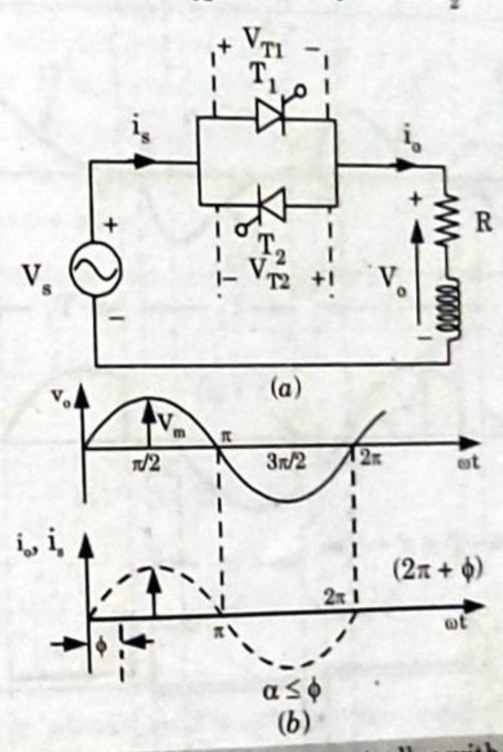

Fig. 4.6.1. Single phase voltage controller with R-L load.

2. During zero to π, T_1 is forward biased. At ωt = α, T_1 is triggered and $i_0 = i_{T1}$ starts building up through the load.
3. At π, load and source voltages are zero but the current is not zero because of the presence of inductance in the load circuit. At β > π, load current reduces to zero. Angle β is called the extinction angle.
4. After π, T_1 is reverse biased but does not turn OFF because i_0 is not zero.

Scanned by TapScanner

At β only, when i_0 is zero, T_1 is turned OFF as it is already reverse biased.

5. After the commutation of T_1 at β a voltage of magnitude $V_m \sin \beta$ at once appears as reverse bias T_1 and as a forward bias across T_2 at β, voltage of magnitude $V_m \sin \beta$ at once appears as reverse bias T_1 and as a forward bias across T_2.
6. From β to π + α, no current exists in the power circuit, Thyristor T_2 is turned ON at (π + α) > β. Current $i_0 = I_{T2}$ starts building up in the reversed direction through the load. At 2π, v_s and v_0 are zero but $i_{T2} = i_0$ is not zero.

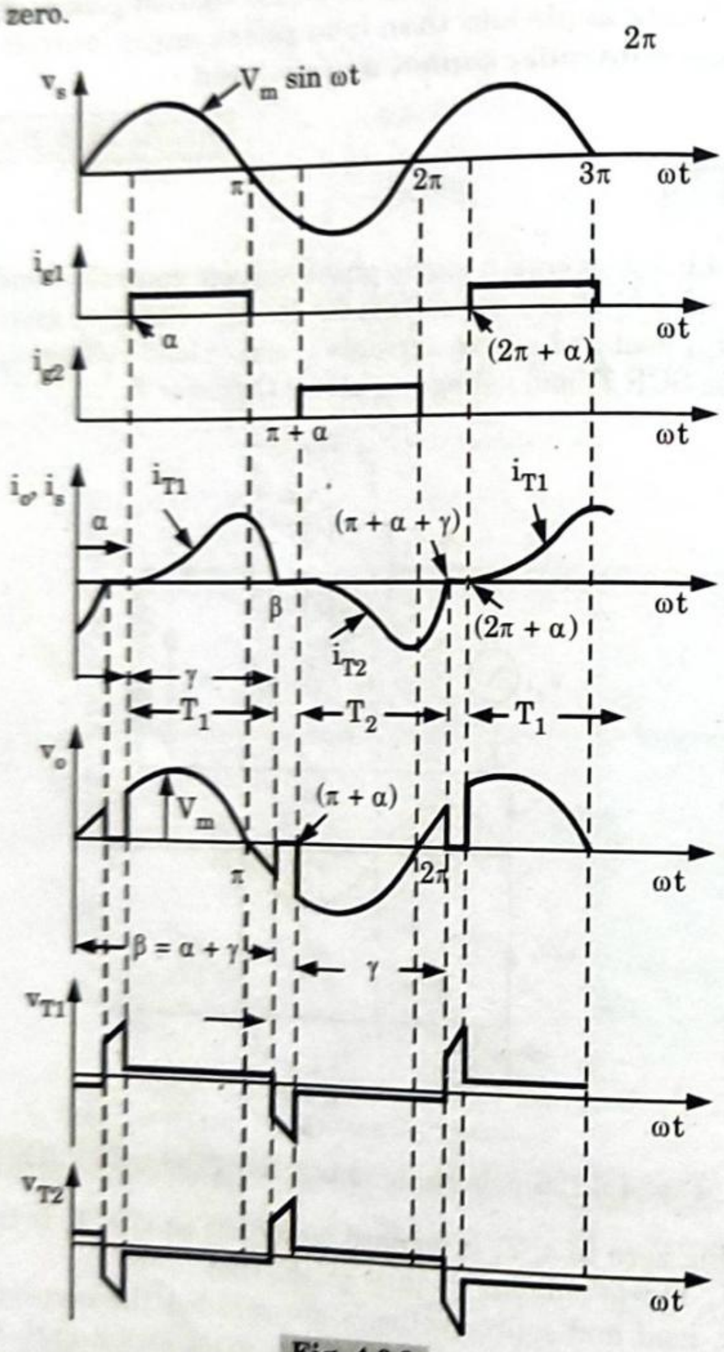

Fig. 4.6.2.

7. At (π + α + γ), $i_{T2} = 0$ and T_2 is turned OFF because it is already reverse

biased. At (π + α + γ), $V_m \sin(\pi + \alpha + \gamma)$ appears as a forward bias across T_1 and as a reverse bias across T_2.

8. From (π + α + γ) to (2π + α), no current exists in the power circuit. At (2π + α), T_1 is turned ON and current starts building up as before.
9. The conduction angle γ during which current flows from angle α to angle β is given by

$$\gamma = \beta - \alpha$$

Operation with α ≤ ϕ :

1. Assume that AC voltage controller is working under steady state with α = ϕ.
2. From zero to ϕ, T_2 conducts and from ϕ to (π + ϕ), T_1 conducts; from (π + ϕ) to (2π + ϕ), T_2 conducts and so on.
3. Now let α be decreased below ϕ. When T_1 is triggered at α < ϕ, T_1 will not get turned ON because it is reverse biased by voltage drop in T_2 which is conducting current i_{T2}.
4. T_1 will get turned ON only at ϕ when $i_{T2} = 0$ and reverse bias due to voltage drop in T_2 vanishes. Now T_1 will conduct from ϕ to (π + ϕ). T_2 will be triggered at an angle (π + α) < (π + ϕ).
5. As T_1 is conducting, a voltage drop in T_1 will apply a reverse bias across T_2 as a result T_2 will not get turned ON at (π + α), but only at (π + ϕ), when $i_{T1} = 0$. Now T_2 will conduct from (π + ϕ) to (2π + ϕ) and so on.
6. Thus the reduction of a below ϕ is not able to control the load voltage and load current. The AC output power can be controlled only for α > ϕ.

Output voltage :

The rms output voltage can be found from

$$E_0 = \left[\frac{2}{2\pi}\int_\alpha^\beta 2V_m^2 \sin^2 \omega t \, d(\omega t)\right]^{1/2}$$

$$= \left[\frac{2V_m^2}{4\pi}\int_\alpha^\beta (1 - \cos 2\omega t)\, d(\omega t)\right]^{1/2}$$

$$= V_m^2\left[\frac{1}{\pi}\int_\alpha^\beta\left(\beta - \alpha + \frac{\sin 2\alpha}{2} - \frac{\sin 2\beta}{2}\right)\right]^{1/2}$$

Que 4.7. **A single phase full wave AC controller operates from 230 V, 50 Hz mains and feeds a resistive load whose value varies between 1.15 ohms and 2.30 ohms. Calculate :**

i. RMS current rating of each SCR
ii. Average current rating of each SCR
iii. The maximum load power for α = π/4.

AKTU 2013-14, Marks 10

Scanned by TapScanner

Answer

Given : $V = 230$ V, $f = 50$ Hz, Load = 1.15 Ω and 2.3 Ω
To Find : I_R, I_{TAV} and P.

1. Thyristor rms current is

$$I_R = \left[\frac{1}{2\pi}\int_{\alpha}^{\pi}\left(\frac{V_m}{R}\sin\omega t\right)^2 d\omega t\right]^{1/2}$$

$$= \frac{V_m}{2R\sqrt{\pi}}\left[(\pi - 2) + \frac{1}{2}\sin 2\alpha\right]^{1/2}$$

2. Let us choose a value of $\alpha = \frac{\pi}{4}$ for both resistance

I_R when $R = 1.15\ \Omega$

$$I_R = \frac{\sqrt{2}\times 230}{2\times 1.15\sqrt{\pi}}\left[\left(\pi - \frac{\pi}{4}\right) + \frac{1}{2}\sin 2\left(\frac{\pi}{4}\right)\right]^{1/2}$$

$$= 134.84 \text{ A}$$

When $R = 2.30\ \Omega$,

$$I_R = \frac{\sqrt{2}\times 230}{2\times 2.30\sqrt{\pi}}\left[\left(\pi - \frac{\pi}{4}\right) + \frac{1}{2}\sin 2\left(\frac{\pi}{4}\right)\right]^{1/2}$$

$$= 67.42 \text{ A}$$

Hence rms current will vary between 67.42 A and 134.89 A.

4. Average thyristor current is given by

$$I_{TAV} = \frac{1}{2\pi}\int_{\alpha}^{\pi}\frac{V_m}{R}\sin\omega t d(\omega t) = \frac{V_m}{2\pi R}(1 + \cos\alpha)$$

I_{TAV} for $R = 1.15\ \Omega$

$$I_{TAV} = \frac{\sqrt{2}\times 230}{2\times\pi\times 1.15}\left(1 + \cos\frac{\pi}{4}\right) = 76.84 \text{ A}$$

for $R = 2.30\ \Omega$

$$I_{TAV} = \frac{\sqrt{2}\times 230}{2\pi\times\pi\times 2.30}\left(1 + \cos\frac{\pi}{4}\right) = 38.42 \text{ A}$$

So, average current will vary between 38.42 A and 76.84 A.

5. Maximum load power for $\alpha = \frac{\pi}{4}$

when $R = 1.15\ \Omega$,

$$P = \frac{V_s^2}{\pi R} = \frac{(230)^2}{\pi\times 1.15} = 14.64 \text{ kW}$$

when $R = 2.30\ \Omega$,

$$P = \frac{V_s^2}{\pi R} = \frac{(230)^2}{\pi\times 2.30} = 7.32 \text{ kW}$$

PART-3

Sequence Control of AC Voltage Controller.

Questions-Answers

Long Answer Type and Medium Answer Type Questions

Que 4.8. **Discuss the two stage sequence control of voltage controller.**

OR

Explain single phase transformer connection changer. Draw waveform for input voltage. **AKTU 2017-18, Marks 10**

Answer

A. Sequence control of AC voltage controllers (Transformer connection changers) :

1. Sequence control of AC voltage controllers means the use of two or more stages of voltage controllers in parallel for the regulation of output voltage.
2. A two-stage sequence control of AC voltage controller employs two stages in parallel as shown in Fig. 4.8.1(*a*).

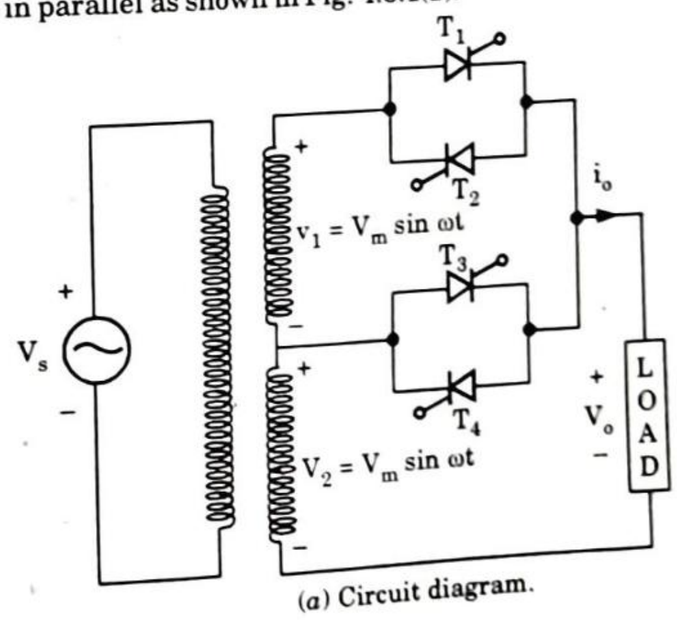

(*a*) Circuit diagram.

Scanned by TapScanner

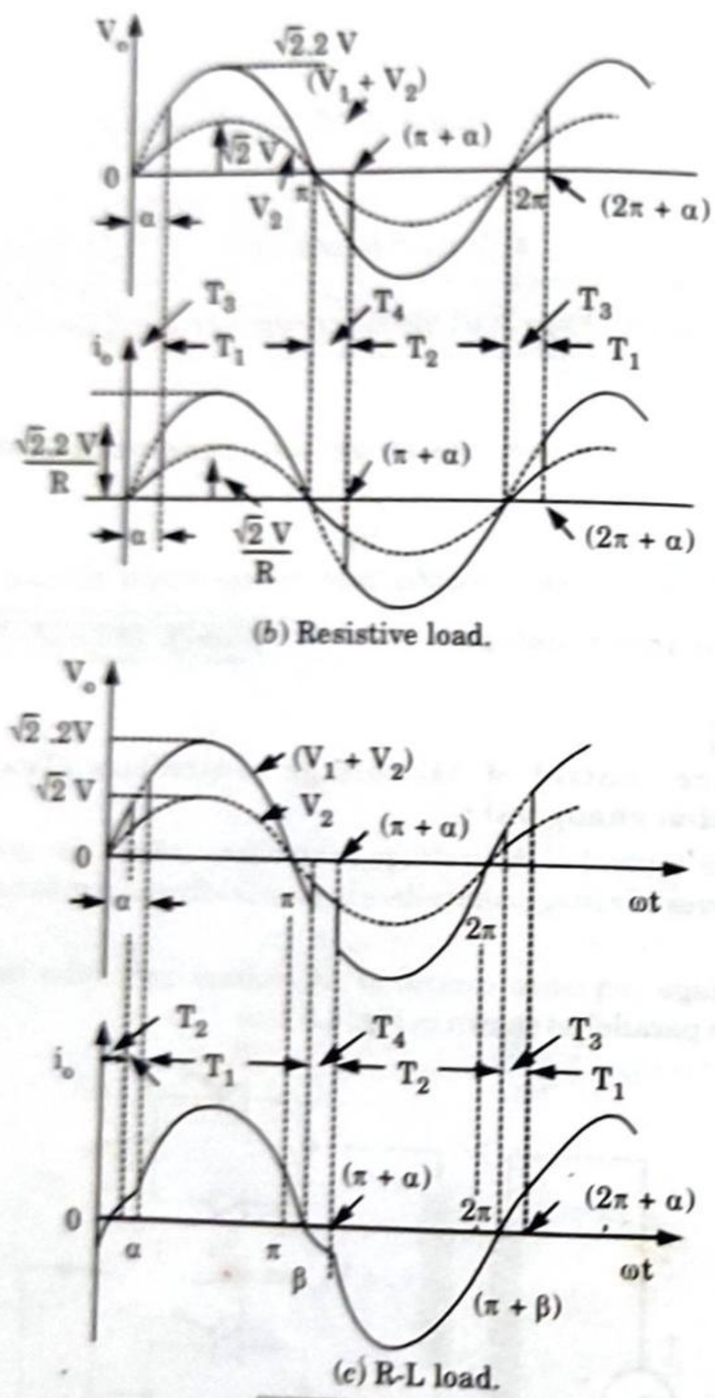

(b) Resistive load.

(c) R-L load.

Fig. 4.8.1.

3. The turns ratio from primary to each secondary is taken as unity for convenience. It means that $V_s = V_m \sin \omega t$, $V_1 = V_2 = V_m \sin \omega t$ and sum of two secondary voltages is $2V_m \sin \omega t$.

a. Resistive load :

1. For resistive load, the current waveform is identical with output voltage waveform.
2. The output voltage, when thyristor T_3 is triggered at $\omega t = 0$, follows $V_2 = V_m \sin \omega t$ curve.

3. When SCR T_1 is triggered at $\omega t = \alpha$, voltage V_1 reverse biases T_3, it is therefore turned OFF.
4. After this, T_1 begins conduction and output voltage jumps from V_2 to $(V_1 + V_2)$ and follows $2V_m \sin \omega t$ curve. At $\omega t = \pi$, output voltage and current are zero.
5. At this instant, T_4 is triggered and output voltage follows $V_m \sin \omega t$ curve. At $\omega t = \pi + \alpha$, when forward biased SCR T_2 is triggered, T_4 is reverse biased by $V_m \sin \alpha$, it is therefore turned OFF, when T_2 begins conduction, output voltage follows $2V_m \sin \omega t$ curve as shown by the negative half cycle in Fig. 4.8.1(*b*).

b. R-L Load :

1. For obtaining output voltage from V to $2V$, firing angle for T_3, T_4 is always zero whereas firing angle for T_1, T_2 is varied from 180° to zero.
2. During positive half cycle, firing pulses for T_1, T_3 last from $\omega t = 0$ to $\omega t = \pi$ and during negative half cycle, firing pulse for T_2, T_4 extend from $\omega t = \pi$ to 2π.
3. During positive half cycle, T_3 is conducting and $V_2 = \sqrt{2}\, V \sin \omega t$ is applied to the load.
4. At $\omega t = \alpha$, when T_1 is triggered, T_3 is turned OFF by reverse voltage V_1 and output voltage jumps to V_1 to $V_2 = 2V_m \sin \omega t$ as shown Fig. 4.8.1(*c*). At $\omega t = \pi$, $(V_1 + V_2)$ reaches zero but output current i_0 is not zero because of the presence of L in the load.
5. At $\omega t = (\pi + \alpha)$, T_2 is triggered V_1 turns OFF T_4 and output voltage in the negative half cycle jumps to (V_1 to V_2) reach zero but i_0 is not zero because of L. At $\omega t = (\pi + \beta)$, i_0 reaches zero.

Que 4.9. **Explain multistage sequence control of AC voltage controllers.**

Answer

1. Multistage sequence control of AC voltage controllers is employed when it is desired to have harmonic content lower than that in a two stage sequence control.
2. Fig. 4.9.1 shows the power circuit for n-stage sequence control of voltage controllers.
3. In this Fig. 4.9.1, the transformer has n secondary windings. Each secondary is rated for v_s/n where v_s is the source voltage. Voltage of terminal a with respect to 0 is v_s. Voltage terminal b is $(n-1)\, v_s/n$ and so on.
4. If voltage control from $v_{a0} = (n-3)\, v_s/n$ to $v_{a0} = (n-2)\, v_s/n$ is required, then the thyristor pair 4 is fired at $\alpha = 0°$ to 180°, whereas all other thyristor pairs are kept OFF.

Scanned by TapScanner

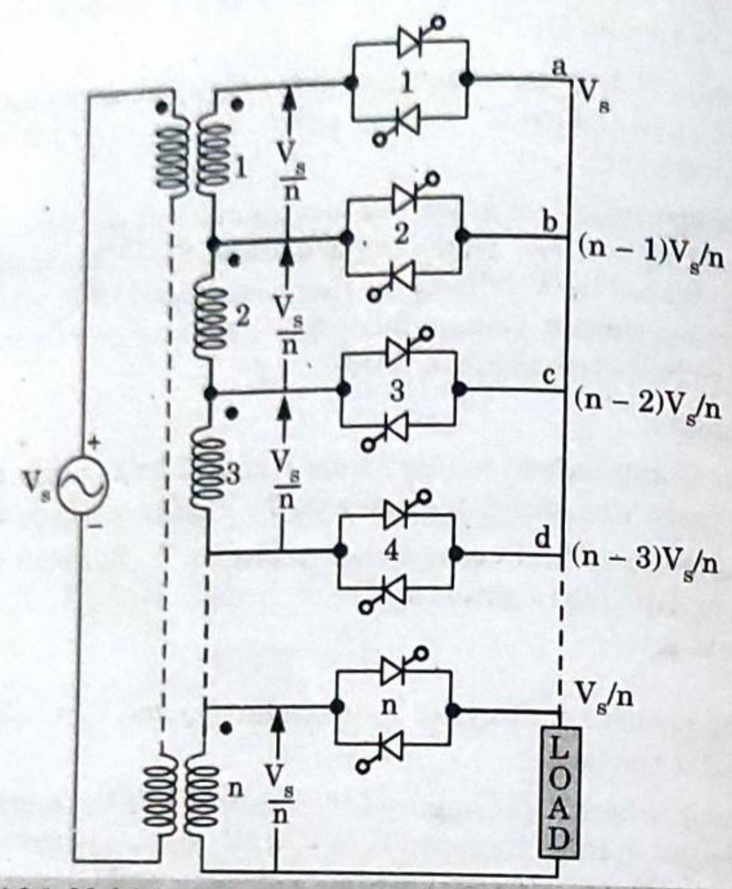

Fig. 4.9.1. Multistage sequence control of AC voltage controllers.

5. Similarly for controlling the voltage from $v_{bo} = (n-1)\, v_s/n$ to $v_{ao} = v_s$, thyristor to pair 2 is triggered at $\alpha = 0°$ whereas for pair 1, α is varied from 0° to 180° by keeping the remaining $(n-2)$ SCR pairs OFF.
6. Thus the load voltage can be controlled from v_s/n to v_s by an appropriate control of triggering the adjacent thyristor pairs.
7. The presence of harmonics in the output voltage depends upon the magnitude of voltage variation. If this voltage variation is a small fraction of the total output voltage, the harmonic content in the output voltage is small.

PART-4

Introduction to Matrix Converter.

Questions-Answers

Long Answer Type and Medium Answer Type Questions

Que 4.10. **Explain matrix converter with suitable diagram.**

Answer

1. The matrix converter uses bidirectional fully controlled switches for direct conversion from AC to AC. It is a single-stage converter that requires only nine switches for three-phase to three-phase conversion.
2. The circuit diagram of the three-phase to three-phase matrix converter is shown in Fig. 4.10.1(*a*). The nine bidirectional switches are so arranged that any of three input phases could be connected to any output phase through the switching matrix symbol in Fig. 4.10.1(*b*).
3. Thus, the voltage at any input terminal may be made to appear at any output terminal or terminals whereas the current in any phase of the load may be drawn from any phase or phases of the input supply.
4. An AC input L-C filter is normally used to eliminate harmonic currents in the input side and the load is sufficiently inductive to maintain continuity of the output currents.
5. The switches should be controlled in such a way that, at any time, one and only one of the three switches connected to an output phase must be closed to prevent short circuiting of the supply lines or interrupting the load current flow in an inductive load.
6. With these constraints, there are 512 (= 2^9) possible states of the converter, but only 27 switch combinations are allowed to produce the output line voltages and input phase currents.
7. With a given set of input three-phase voltages, any desired set of three-phase output voltages can be synthesized by adopting a suitable switching strategy.

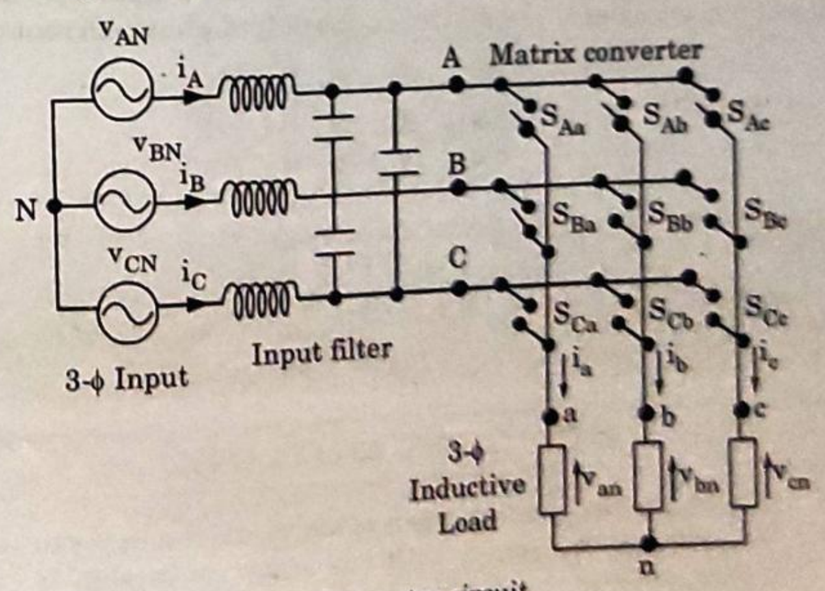

(*a*) Converter circuit

Scanned by TapScanner

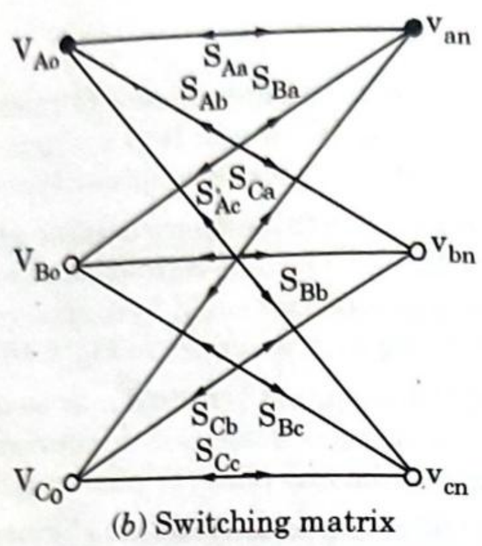

(*b*) Switching matrix

Fig. 4.10.1.

8. The matrix converter can connect any input phase (A, B, and C) to any output phase (a, b, and c) at any instant.
9. When connected, the voltages v_{an}, v_{bn}, v_{cn} at the output terminals are related to the input voltages V_{AN}, V_{BN}, V_{CN} as

$$\begin{bmatrix} V_{an} \\ V_{bn} \\ V_{cn} \end{bmatrix} = \begin{bmatrix} S_{Aa} & S_{Bb} & S_{Ca} \\ S_{Ab} & S_{Bb} & S_{cb} \\ S_{Ac} & S_{Bc} & S_{Cc} \end{bmatrix} \begin{bmatrix} V_{AN} \\ V_{BN} \\ V_{CN} \end{bmatrix} \quad ...(4.10.1)$$

where S_{Aa} through S_{Cc} are the switching variables of the corresponding switches.

10. For a balanced linear Y-connected load at the output terminals, the input phase currents are related to the output phase currents by

$$\begin{bmatrix} i_A \\ i_B \\ i_C \end{bmatrix} = \begin{bmatrix} S_{Aa} & S_{Ab} & S_{Ac} \\ S_{Ba} & S_{Bb} & S_{Bc} \\ S_{Ca} & S_{Cb} & S_{Cc} \end{bmatrix} \begin{bmatrix} i_a \\ i_b \\ i_c \end{bmatrix} \quad ...(4.10.2)$$

PART-5

Basic Principle of Operation of Cycloconverter and Single Phase to Single Phase Cycloconverter.

CONCEPT OUTLINE

- A device which converts input power at one frequency to output at different frequency with one stage conversion is called cycloconverter.
- Types :

i. Step up cycloconverter.
ii. Step down cycloconverter.

Questions-Answers

Long Answer Type and Medium Answer Type Questions

Que 4.11. **Explain the working principle of single phase to single phase cycloconverter with appropriate waveform and bridge circuit.**

AKTU 2017-18, Marks 10

OR

Explain single phase to single phase cycloconverter and draw circuit and waveform for resistive load. **AKTU 2017-18, Marks 10**

Answer

1ϕ to 1ϕ circuit step up cycloconverter : A Step up cycloconverter requires forced commutation.

A. Mid point cycloconverter :

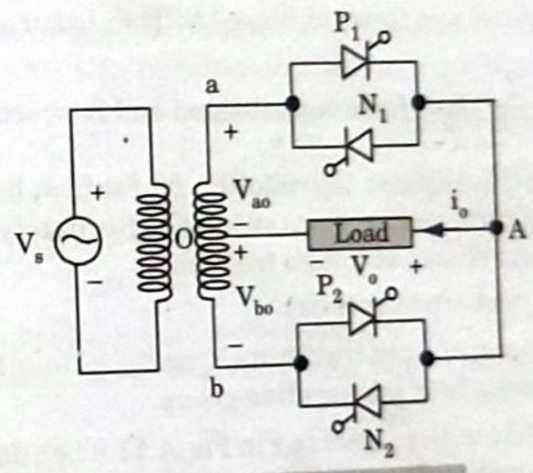

Fig. 4.11.1. Mid-point type.

1. It consists of a single phase transformer with mid-tap on the secondary winding and four thyristors.
2. Two of these thyristor P_1 and P_2 are for positive group and the other two N_1 and N_2 are for the negative group. Load is connected between secondary winding mid-point O and terminal A.

Working :

1. During the positive half cycle of supply voltage terminal a is positive with respect to terminal b.
2. Therefore in this positive half cycle, both SCR, P_1 and N_2 are forward biased from $\omega t = 0$ to $\omega t = \pi$. SCR P_1 is turned ON at $\omega t = 0$, so that load voltage is positive with terminal A positive and O negative.

Scanned by TapScanner

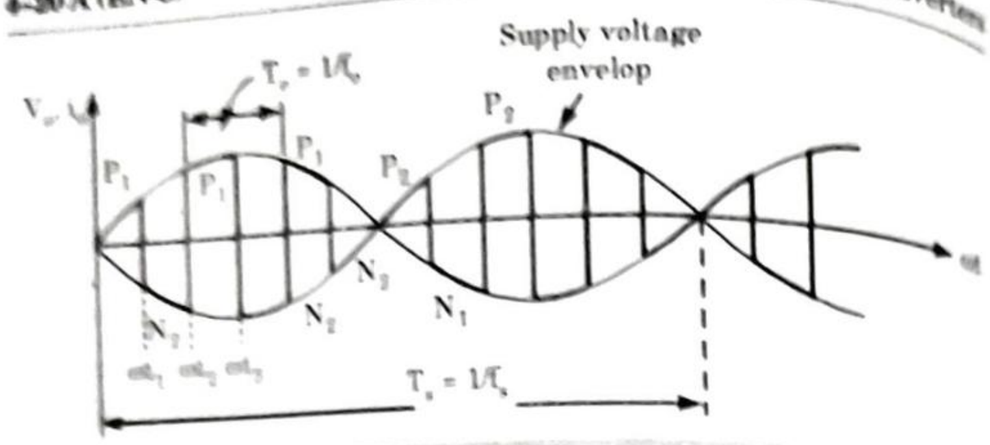

Fig. 4.11.2. Waveforms for step-up cycloconverter.

3. At instant ωt_1, P_1 is force commutated and forward biased, thyristor N_1 is turned ON so that load voltage is negative with terminal O positive and A negative.
4. The load or output voltage now traces the negative envelope of the supply voltage. At ωt_2, N_2 is force commutated and P_1 is turned ON, the load voltage is now positive and follows the positive envelope of supply voltage.
5. At $\omega t = \pi$, terminal b is positive with respect to terminal a, both SCRs P_1 and N_1 are therefore forward biased from $\omega t = \pi$ to 2π. At $\omega t = \pi$, N_2 is force commutated and forward biased SCR P_2 is turned ON.
6. At $\omega t = \frac{1}{2f_s} + \frac{1}{2f_o}$, P_2 is force commutated and forward biased SCR N_1 is turned ON. In this manner thyristor P_1, N_2 for first half cycle, P_2, N_1 in the second half cycle and so on are switched alternately between positive and negative envelopes at a high frequency.

B. Bridge type cycloconverters :

1. It consists of a total of eight thyristors P_1 to P_4 *i.e.*, four for positive group and the remaining four for negative group.
2. When a is positive with respect to x in Fig. 4.11.3 *i.e.*, during the positive half cycle of supply voltage thyristor pairs P_1, P_2 and N_1, N_2 forward biased from $\omega t = 0$ to $\omega t = \pi$.
3. When forward biased thyristor P_1, P_2 are turned ON together at $\omega t = 0$, the load voltage is positive with respect to x.
4. Forward biased thyristors P_1, P_2 are turned ON together at $\omega t = 0$ so that load voltage is positive with terminal A positive with respect to O.
5. At ωt_1, pair P_1, P_2 is force commutated and forward biased pair N_1, N_2 is turned ON.
6. At ωt_2, N_1, N_2 are force commutated and P_1, P_2 are turned ON.
7. The load voltage is now positive and follows the positive envelope of source voltage. After $\omega t = \pi$, thyristor pairs P_3, P_4 and N_3, N_4 are forward biased, these can therefore be turned ON and force commutated from $\omega t = \pi$ to $\omega t = 2\pi$.

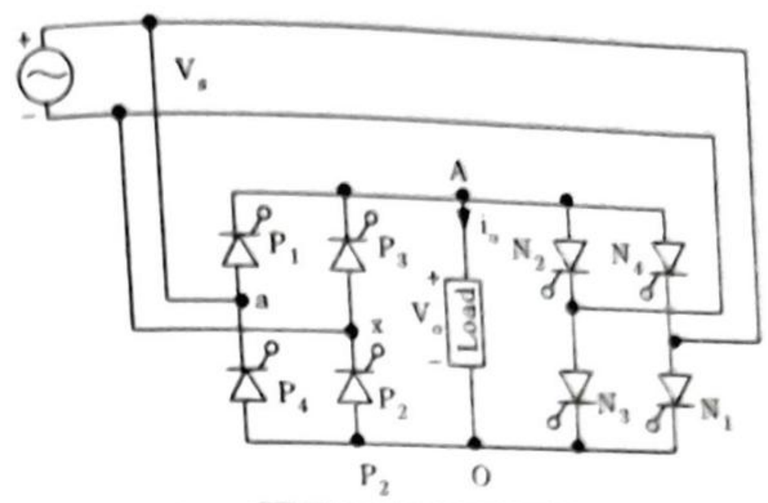

Fig. 4.11.3. Bridge type.

8. A high frequency turning ON and force commutation of pairs P_1, P_2, N_1, N_2 and pairs P_3, P_4, N_3, N_4 gives a carrier frequency modulated output voltage across load terminal.

Que 4.12. **Describe the basic principle of working of 1ϕ to 1ϕ step down cycloconverter for both continuous and discontinuous conductions. Make the conduction of various thyristor also.**

AKTU 2013-14, Marks 10

AKTU 2014-15, Marks 10

Answer

1. A step down cycloconverter does not require forced commutation, as they have phase controlled converter connected to them as shown in Fig. 4.12.1.

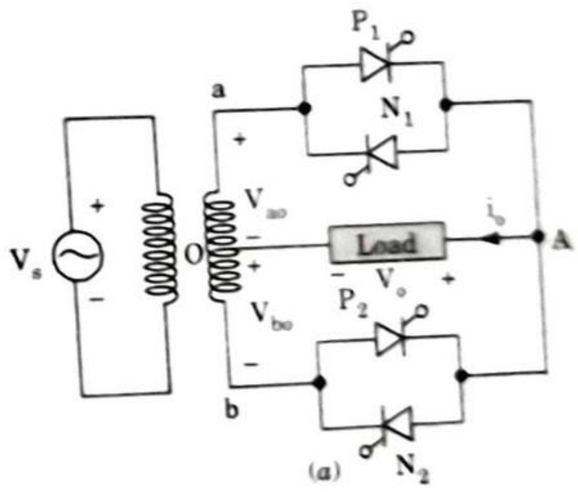

Scanned by TapScanner

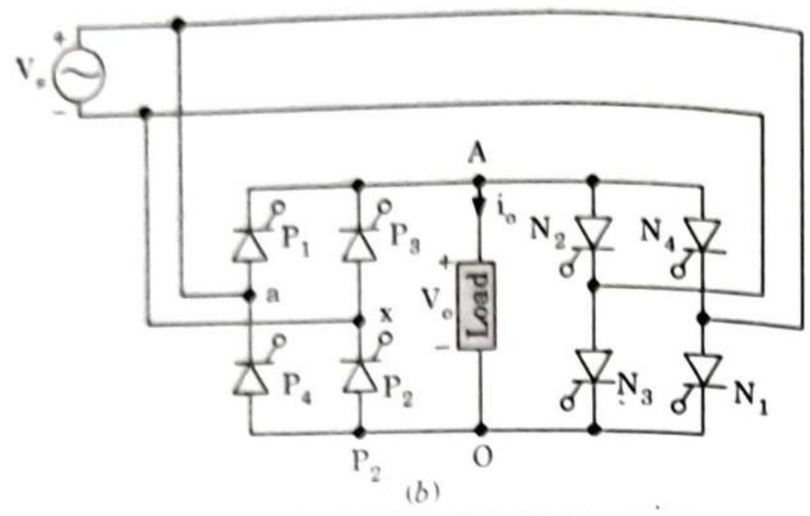

Fig. 4.12.1. 1ϕ to 1ϕ cycloconverter circuit : (a) Mid-point type and (b) Bridge type.

i. Discontinuous load current :

1. When a is positive with respect to O, forward biased SCR P_1 is triggered at $\omega t = \alpha$. With this, load current i_0 starts building up in positive direction from A to O. Load current i_0 becomes zero at $\omega t = \beta > \pi$ but less than $(\pi + \alpha)$, as shown in Fig. 4.12.2.
2. Thyristor P_1 is thus naturally commuted at $\omega t = \beta$ which is already reverse biased after π.
3. After half cycle, b is positive with respect to O. Now forward biased thyristor P_2 is triggered at $\omega t = (\pi + \alpha)$, load current again is positive from A to O and builds up from zero as shown in Fig. 4.12.2(c).
4. At $\omega t = (\pi + \beta)$, i_0 decays to zero and P_2 is naturally commutated.
5. At $\omega t = (2\pi + \alpha)$, P_1 is turned ON again. Load current in Fig. 4.12.2(c) is seen to be discontinuous.
6. After 4π positive half cycles of load voltage and load current, thyristor N_2 (after P_2, N_2 should be fired) is gated at $\omega t = (4\pi + \alpha)$, when O is positive with respect to b.
7. As N_2 is forward biased, it starts conducting but load current direction is reversed, *i.e.*, it is now from O to A.
8. After N_2 is triggered, load current builds up in negative direction as shown in Fig. 4.12.2.
9. In next half cycle, O is positive with respect to a, but before N_1 is fired, i_0 decays to zero and N_2 is naturally commutated. Now, when N_1 is gated at $\omega t = (5\pi + \alpha)$, i_0 again builds up but it decays to zero before thyristor N_2 in sequence is again gated.
10. In this manner, 4 negative half cycle of load voltage and load current, equals to the number of 4 positive half cycles of load voltage and so on.

Thus output frequency, $f_0 = \frac{1}{4} f_s$.

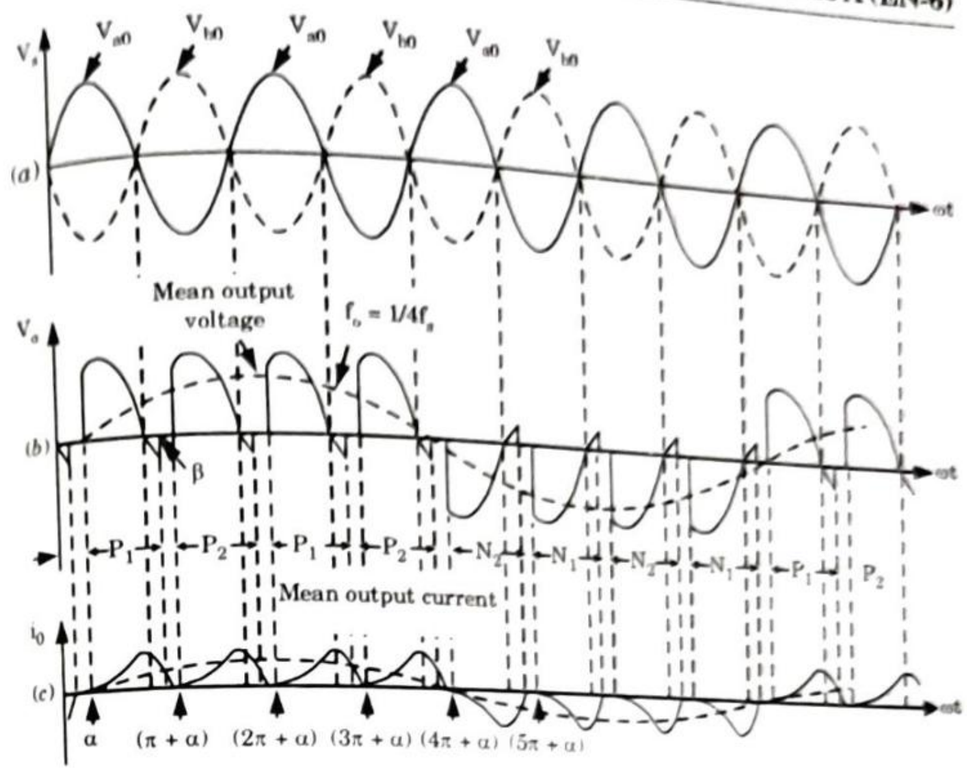

Fig. 4.12.2. Voltage and current waveforms for step-down cycloconverter with discontinuous load current.

ii. Continuous load current :

1. When a is positive with respect to O as shown in Fig. 4.12.1, P_1 is triggered at $\omega t = \alpha$, positive output voltage appears across load and load current starts building up.
2. At $\omega t = \pi$, supply and load voltages are zero. After $\omega t = \pi$, P_1 is reverse biased.
3. As load current is continuous P_1 is not turned OFF at $\omega t = \pi$. When P_2 is triggered in sequence at $\omega t = (\pi + \alpha)$, a reverse voltage appears across P_1, thus P_1 is turned OFF naturally.
4. When P_1 is commutated, load current builds up to a value equal to RR, as shown in Fig. 4.12.3(c).
5. With the turning ON of P_2 at $\omega t = (\pi + \alpha)$, output voltage is again positive as it was with P_1 ON. Thus, load current builds up further than RR as shown in Fig. 4.12.3(c).
6. At $\omega t = (2\pi + \alpha)$, when P_1 is again turned ON P_2 is naturally commutated and load current through P_1 builds up beyond RS as shown in Fig. 4.12.3(c).
7. After 4 positive cycles of output voltage, load current is RU. When N_2 is now triggered after P_2, load is subjected to a negative voltage cycle and load current i_0 decreases from positive RU to a negative AB as shown in Fig. 4.12.3(c).

Scanned by TapScanner

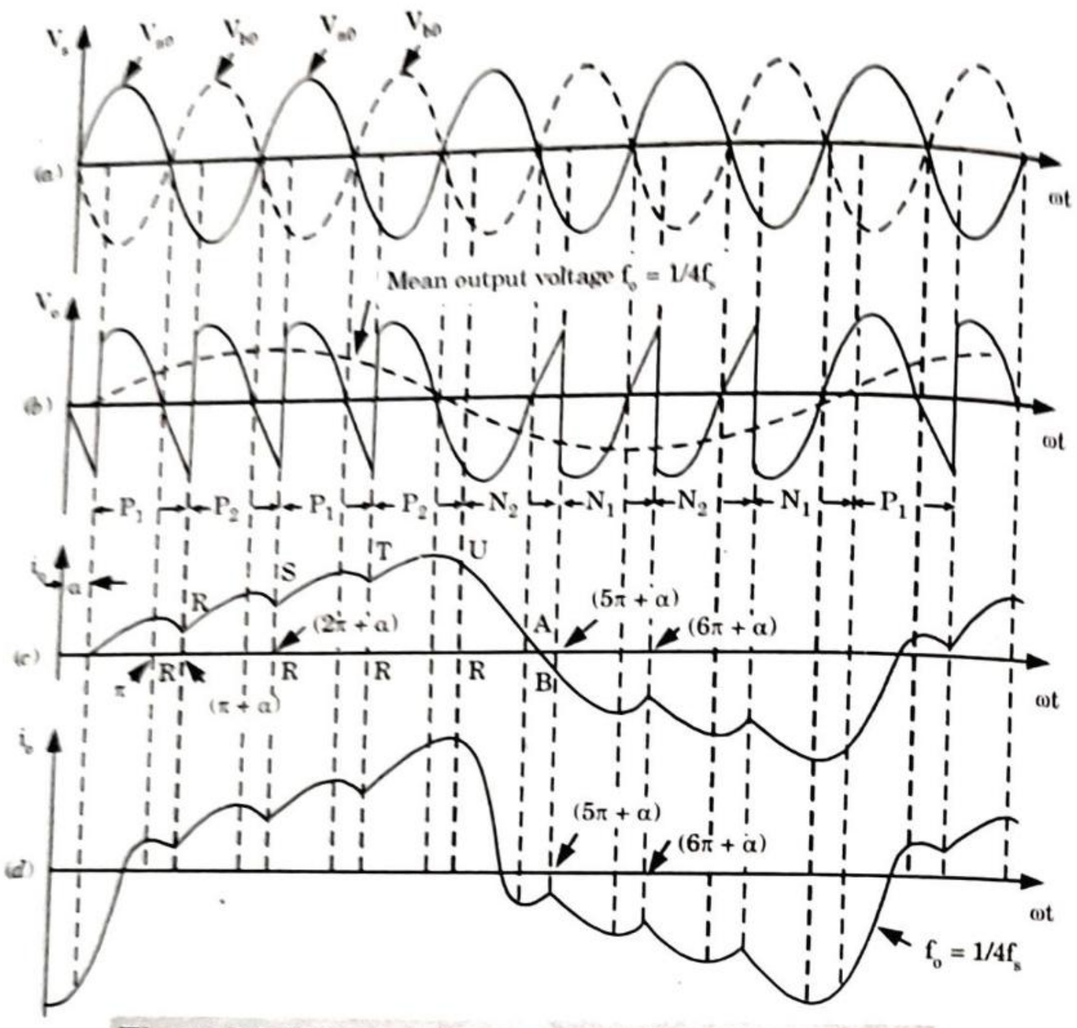

Fig. 4.12.3. Voltage and current waveforms for step-down cycloconverter with continuous load current.

8. Now N_2 is commutated and N_1 is gated at $5\pi + \alpha$. Load current i_0 become more negative than AB at $6\pi + \alpha$, because load voltage is negative with N_1 ON.
9. For four negative half cycles of output voltage, current i_0 is shown in Fig. 4.12.3(*c*). Load current waveform is shown in Fig. 4.12.3(*d*) under steady state conditions.
10. The positive group of voltage and current wave consists of four pulses and the same is true for negative group of wave. One positive and one negative group of pulse constitute a cycle for load voltage and load current. Thus output frequency

i.e., $$f_0 = \frac{1}{4} f_s.$$

PART-6

Three Phase to Single Phase Output Voltage Equation.

Questions-Answers

Long Answer Type and Medium Answer Type Questions

Que 4.13. **Discuss the neat circuit diagram of 3ϕ to 1ϕ cyclo converter feeding R-L load. Draw the output voltage waveforms.**

AKTU 2015-16, Marks 10

OR

Explain three phase to single phase cycloconvertor with neat diagram.

AKTU 2017-18, Marks 10

Answer

1. For converting 3ϕ supply at one frequency to 1ϕ supply at a lower frequency, the basic principle is to vary progressively the firing angle of the three thyristors of a 3ϕ half wave circuit.

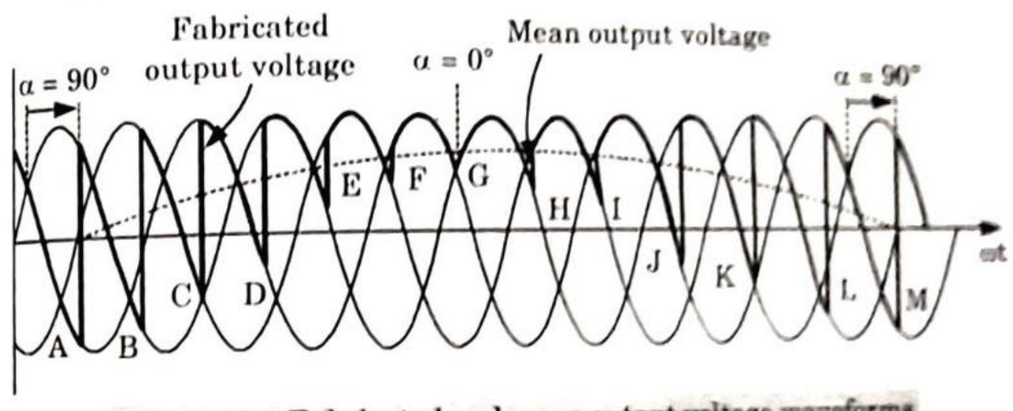

Fig. 4.13.1 Fabricated and mean output voltage waveforms for a single-phase cycloconverter.

2. In Fig. 4.13.1, firing angle at *A* to 90°, at *B* firing angle is somewhat less than 90°, at *C* firing angle is still further reduced.
3. A small delay in firing angle is introduced at *C, D, E, F* and *G*. At *G* the firing angle is zero and mean output voltage given by $V_o = V_m \cos\alpha$ is maximum at *G*.
4. At *A* the mean output voltage is zero as $\alpha = 90°$. After point *G*, a small delay in firing angle is further introduced progressively at points *H, I, J, K, L* and *M*. At *M*, the firing angle is again 90° and the value of mean output voltage is zero.
5. For one half cycle of fundamental frequency output voltage, there are eight half cycles of supply frequency voltage. This shows that output frequency $f_o = \frac{1}{8} f_s$ where f_s is the supply frequency.

Scanned by TapScanner

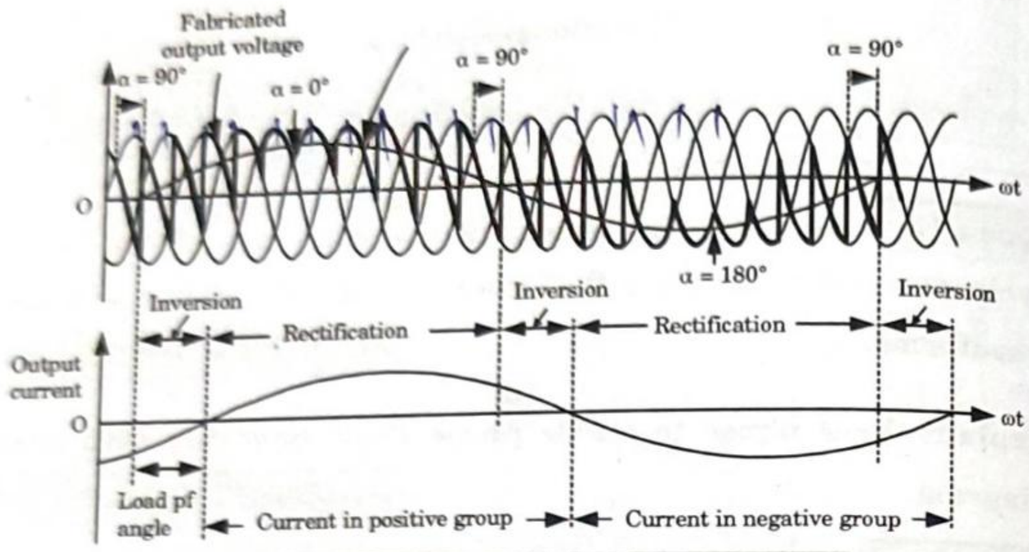

Fig. 4.13.2. Voltage and current waveforms for a 3-phase half-wave cycloconverter.

6. It is clear from Fig. 4.13.1, that for obtaining one cycle of low frequency output voltage, the firing angle should be varied from 90° to zero degree to 90° for positive half cycle and from 90° to 180° and back to 90° for negative half cycle.
7. A complete cycle of low frequency output voltage can be fabricated from the segment of 3 ϕ input voltage waveform by the use of phase controlled converters. The cycloconverter can be made to deliver any power factor load.
8. The converter circuit that permits the flow of current during positive half cycle of low frequency output current is called positive converter group. The other group permitting the flow of current during the negative half cycle of output current is called negative converter group.
9. Positive converter acts as a rectifier when output voltage is positive and as an inverter when output voltage is negative.
10. When output current is negative, the negative converter conducts, under this condition, negative converter acts as a rectifier when output voltage is negative and as an inverter when output voltage is positive.
11. The average value of the two converters is equal in magnitude and opposite in sign. The sum of their firing angles must be 180°. In other words if α_p an α_n are the firing angles for positive and negative group converters respectively, then these firing angles should be so controlled as to satisfy the relation $\alpha_p + \alpha_n = 180°$.

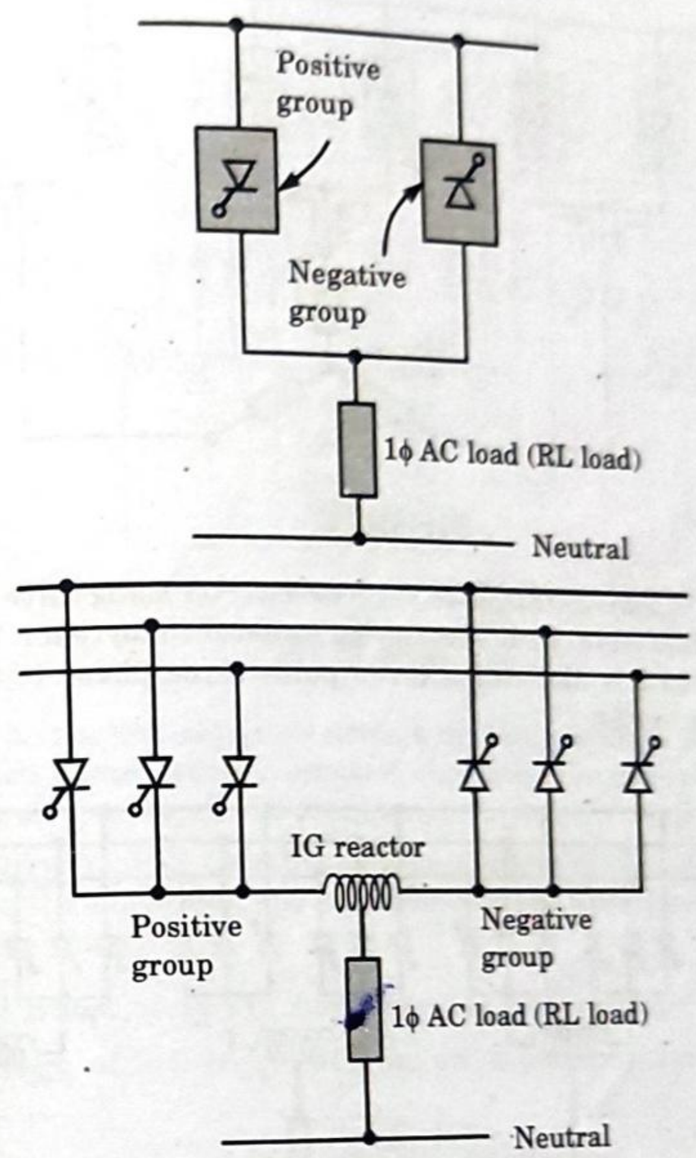

Fig. 4.13.3. Three-phase to single-phase cycloconverter : (*a*) Schematic diagram and (*b*) Basic circuit configuration with IG reactor.

Que 4.14. **Discuss with neat circuit diagram 3-phase to 3-phase cycloconverter.**

Answer

1. When 3ϕ low frequency output is required, then three sets of phase controlled three phase to single phase circuit are interconnected as shown in Fig. 4.14.1. Each phase of 3ϕ output must have a phase displacement of 120°.

Scanned by TapScanner

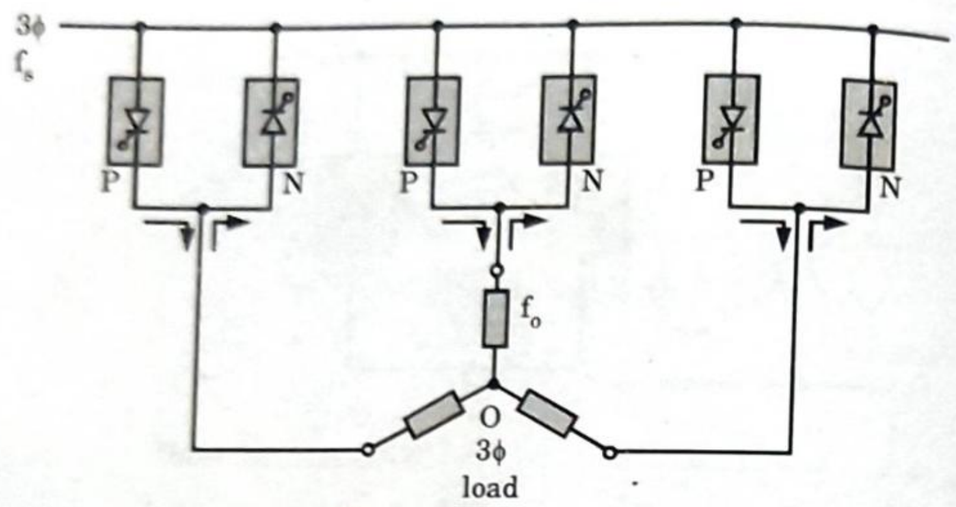

Fig. 4.14.1.

2. Fig. 4.14.2 shows that 3ϕ to 3ϕ cycloconverter using three sets of three phase half wave circuits employing a total of 18 thyristor. The device in Fig. 4.14.2 is also called three pulse three phase to three phase cycloconverter.

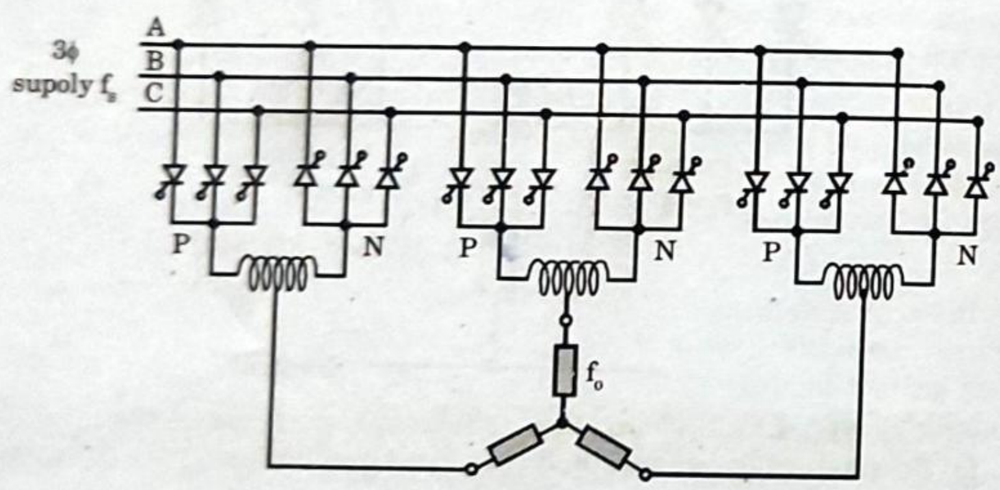

Fig. 4.14.2.

Three phase bridge circuit :

1. It employs 36 thyristors and is called 6 pulse, 3-phase to 3-phase cycloconverter. In this circuit shown in Fig. 4.14.3, each phase group consists of a 3-phase dual converter with two IGRs.
2. The load phase must not be interconnected. If it is done, then positive group of one output phase and negative group of other output phase would be joined together through IGRs without load impedance which is undesirable.

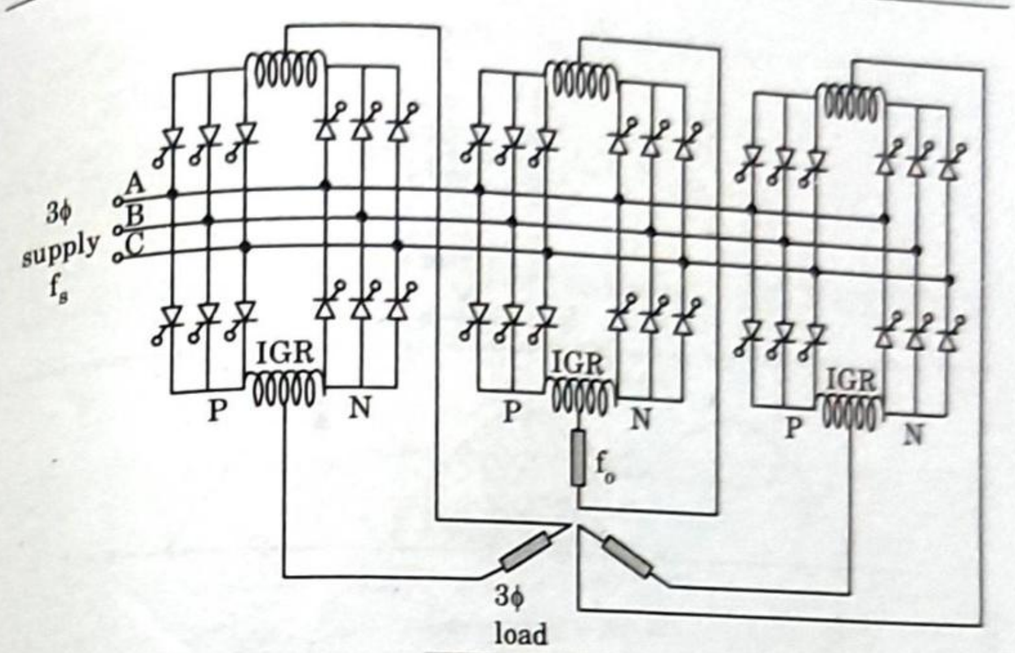

Fig. 4.14.3.

3. In case it is essential to interconnect the load phases in star or delta, then each phase group is supplied separately from three secondary winding s_1, s_2 and s_3 of a 3ϕ transformer.
4. In this arrangement, as individual phase groups are isolated from each other on the input side, the interconnection of load phases in star or delta is permissible.

Que 4.15. **Show that the fundamental rms value of per phase output voltage of low-frequency for an m-pulse cycloconverter is given by**

$$V_{or} = V_{ph}\left(\frac{m}{\pi}\sin\left(\frac{\pi}{m}\right)\right)$$

AKTU 2014-15, Marks 10

Answer

1. $$V = V_m \cos \omega t = \sqrt{2}\, V_{ph} \cos \omega t$$
V_{ph} = Rms value of per phase supply voltage.

2. Conduction takes place from $-\frac{\pi}{m}$ to $\frac{\pi}{m}$ for $\alpha = 0°$. For any firing angle α, the conduction is from $\left(-\frac{\pi}{m}+\alpha\right)$ to $\left(\frac{\pi}{m}+\alpha\right)$.
3. Then average value of output DC voltage V_d, equal to the average height of shaded area in Fig. 4.15.1.

Scanned by TapScanner

$$V_d = \frac{m}{2\pi}\int_{(-\pi/m+\alpha)}^{(\pi/m+\alpha)} V_m \cos\omega t \, d(\omega t)$$

$$= V_m\left[\left(\frac{m}{\pi}\sin\frac{\pi}{m}\right)\right]\cos\alpha \qquad ...(4.15.1)$$

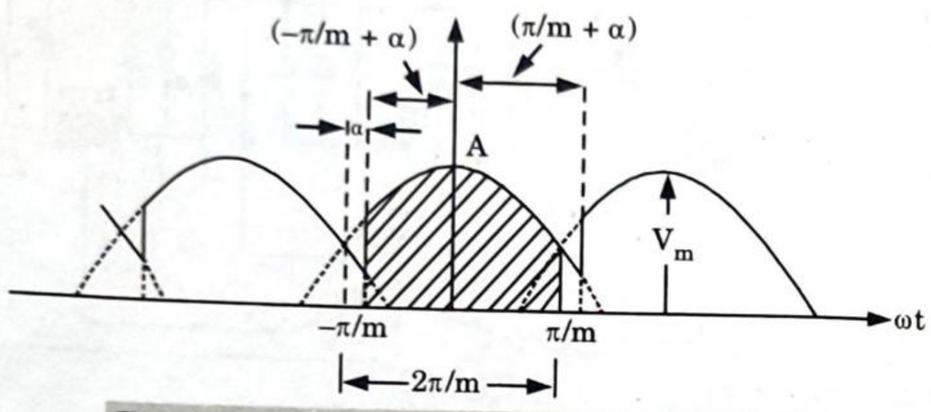

Fig. 4.15.1. Output voltage waveform for m-phase half-wave converter with firing angle α.

4. For zero firing angle delay, the average value of direct voltage V_{do} is given as

$$V_{do} = V_m\left(\frac{m}{\pi}\right)\sin\frac{\pi}{m} = V_m\left[\left(\frac{m}{\pi}\sin\frac{\pi}{m}\right)\right]\cos\alpha$$

5. If V_{or} is the fundamental rms value of per phase output voltage of cycloconverter, the peak output voltage for zero firing angle is

$$\sqrt{2}\,V_{or} = V_{do} = \sqrt{2}\,V_{ph}\left(\frac{m}{\pi}\right)\sin\frac{\pi}{m}$$

$$V_{or} = V_{ph}\left(\frac{m}{\pi}\right)\sin\frac{\pi}{m} \qquad ...(4.15.2)$$

☺☺☺

5 UNIT

Inverters

CONTENTS

Part-1 : Single Phase Inverters and VSI ..... 5–2A to 5–6A
Part-2 : Three Phase Bridge Inverters ..... 5–6A to 5–15A
Part-3 : CSI ..... 5–15A to 5–21A
Part-4 : Voltage Control of Single Phase Inverters ..... 5–21A to 5–23A
Part-5 : PWM Techniques ..... 5–23A to 5–26A
Part-6 : Introduction to Multi-level Inverter ..... 5–27A to 5–28A

Scanned by TapScanner

PART-1

Single Phase Inverter and VSI.

CONCEPT OUTLINE

- A device that converts DC power into AC power at desired output voltage and frequency is called an inverter.
- Inverters can be broadly classified into two types :

1. Voltage source inverters.
2. Current source inverters.

Questions-Answers

Long Answer Type and Medium Answer Type Questions

Que 5.1. **Explain the working of single phase bridge inverter.**

OR

Discuss the principle of voltage source inverter.

Answer

1. **Voltage Source Inverter (VSI) :** The inverter in which input DC voltage source is converted in AC voltage is called VSI.
2. Single-phase bridge inverters are of two types, namely

i. Single-phase half bridge inverters.

ii. Single phase full bridge inverters.

3. Circuit diagrams of the two configuration of single phase bridge inverter are shown in Fig. 5.1.1(*a*) for half-bridge inverter and in Fig. 5.1.2(*a*) for full bridge inverter.
4. The gating signals for the thyristor and the resulting output voltage waveforms are shown in Fig, 5.1.1(*b*) and Fig. 5.1.2(*b*) for half bridge and full bridge inverters respectively.
5. Single phase half bridge inverter, as shown in Fig. 5.1.1(*a*), consists of two SCRs, two diodes and three-wire supply.
6. It is seen from Fig. 5.1.1(*b*), that for $0 < t \le T/2$, thyristor T_1 conducts and the load is subjected to a voltage $V_s/2$ due to the upper voltage source $V_s/2$.
7. At $t = T/2$, thyristor T_1 is commutated and T_2 is gated ON.

8. During the period $T/2 < t \le T$, thyristor T_2 conducts and the load is subjected to a voltage source $V_s/2$.
9. It is seen from Fig. 5.1.1(*b*) the voltage is an alternating voltage waveforms of amplitude $V_s/2$ and of frequency $1/T$ Hz. Frequency of the inverter output voltage can be changed by controlling T.

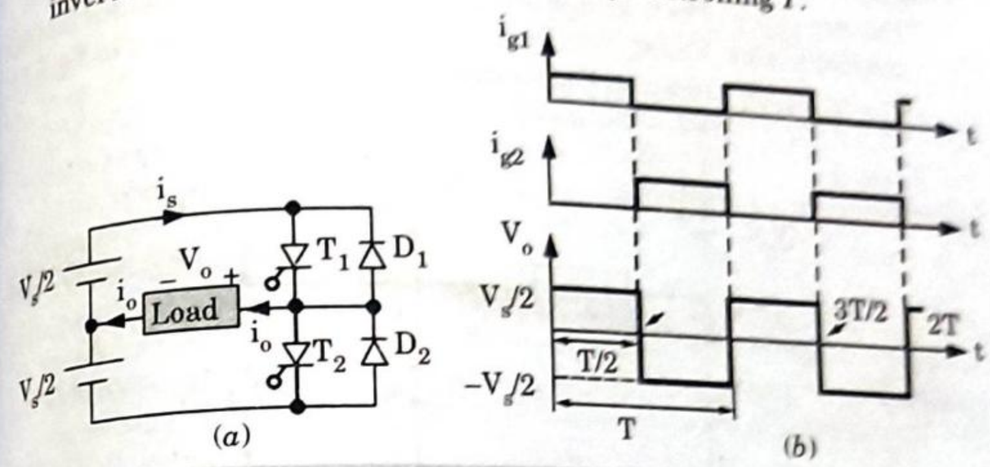

Fig. 5.1.1. Single phase half bridge inverter.

10. For full bridge inverter when T_1, T_2 conduct load voltage is V_s and when T_3, T_4 conducts load voltage is $-V_s$ as shown in Fig. 5.1.2(*b*). Frequency of output voltage can be controlled by varying the periodic time T.

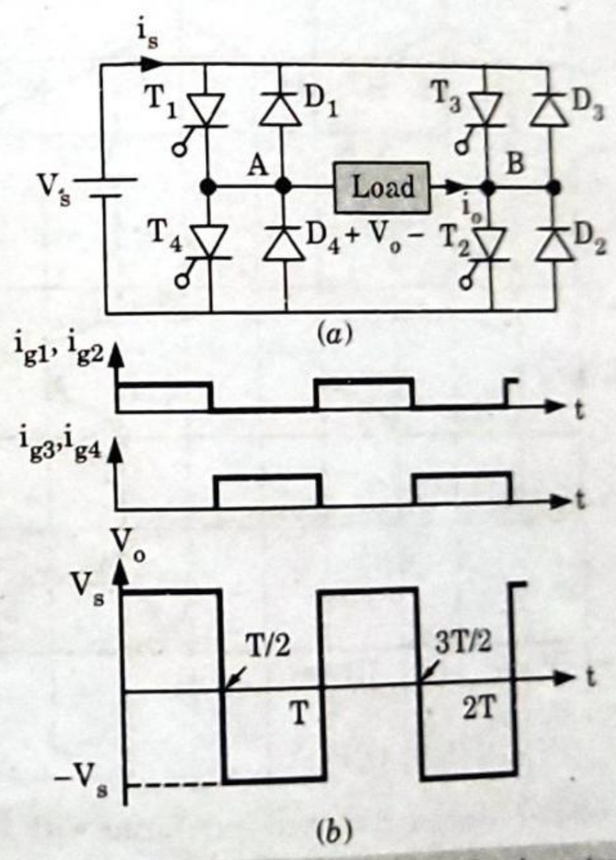

Fig. 5.1.2. Single phase full bridge inverter.

Scanned by TapScanner

Que 5.2. **Explain 1ϕ half bridge inverter with *R-L* load.**

Answer

The operation of half-bridge inverter with *R-L* load is divided into four distinct modes. Voltage and current waveforms are shown in Fig. 5.2.2. D_1 and D_2 are known as the feedback diodes.

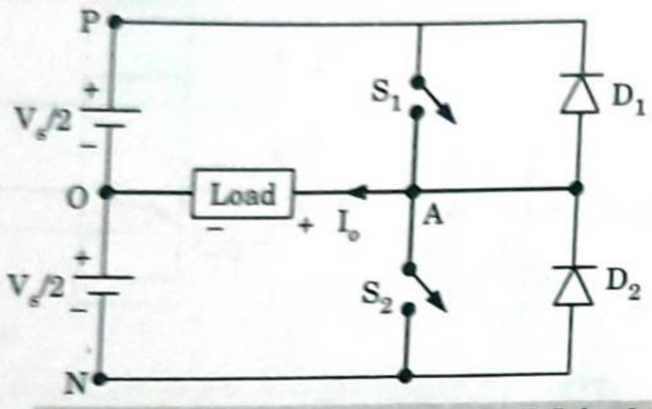

Fig. 5.2.1. Half-bridge inverter for R-L load.

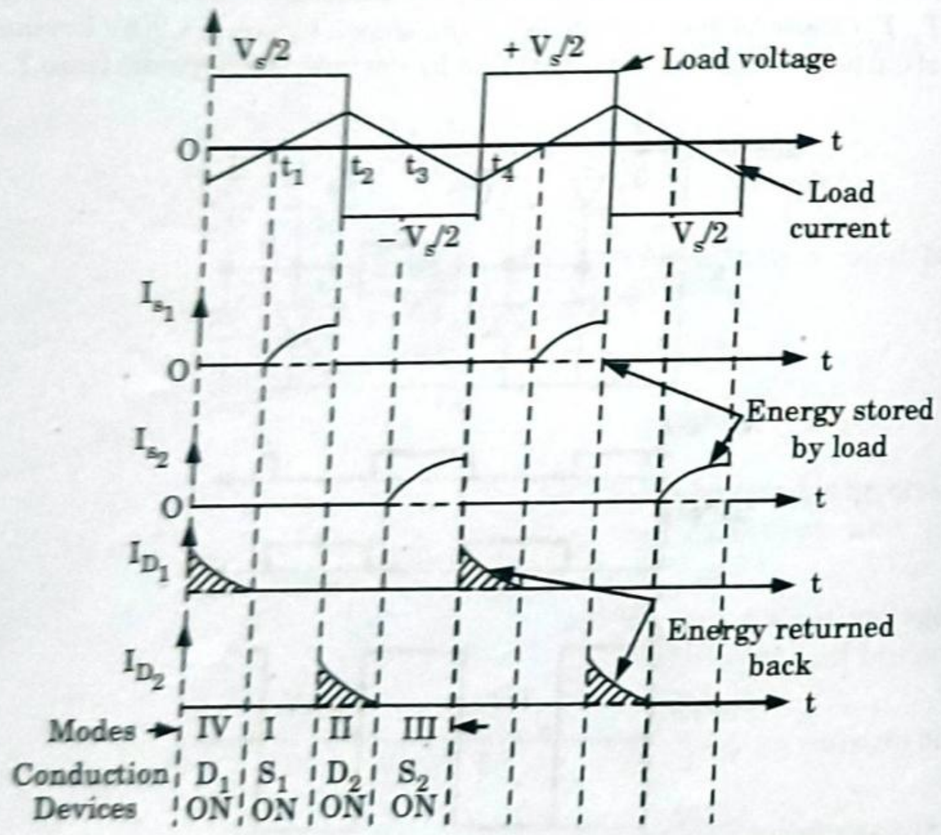

Fig. 5.2.2. Voltage and current waveforms with RL load.

Mode I ($t_1 < t < t_2$) :

1. S_1 is turned-ON at instant t_1, the load voltage is equal to $+V_s/2$ and the positive load current increases gradually.

2. At instant t_2, the load current reaches the peak value. Switch S_1 is turned-OFF at this instant.
3. Due to same-polarity of load voltage and load current, the energy is stored by the load.

Mode II ($t_2 < t < t_3$) :

1. Due to inductive-load, the load current direction will be maintained even-after S_1 is turned-OFF.
2. The self-induced voltage in the load will be negative. The load current flows through lower half of the supply and D_2.
3. In this mode, the stored energy in load is fed back to the lower half of the source and the load voltage is clamped to $-V_s/2$.

Mode III ($t_3 < t < t_4$) :

1. At instant t_3, the load-current goes to zero, the stored energy has been returned back to the lower half of supply. At instant t_3, S_2 is turned-ON.
2. This will produce a negative load voltage $e_0 = -V_s/2$ and a negative load current. Load current reaches a negative peak at the end of this interval.

Mode IV ($t_0 < t < t_1$) :

1. Switch S_2 is turned-OFF at instant t_4. The self induced voltage in the inductive load will maintain the load current.
2. The load voltage changes its polarity to become positive $V_s/2$, load current remains negative and the stored energy in the load is returned back to the upper half of the DC source.
3. At t_5, the load current goes to 0 and S_1 can be turned-ON again. This cycle of operation repeats.

Que 5.3. **A single phase bridge inverter feeds power to a load of $R = 12\ \Omega$ and $L = 0.03$ H from a 400 V DC source. If the inverter operates at a frequency of 50 Hz, determine the power delivered to load for**

i. Square wave operation and

ii. Quasi-square wave operation.

Answer

Given : $R = 12\ \Omega$, $L = 0.03$ H, $V_s = 400$ V, $f_s = 50$ Hz

To Find : Power delivered.

i. Square wave operation :

1. $$V_o = \frac{4V_s}{\sqrt{2}\pi} = \frac{4 \times 400}{\pi\sqrt{2}} = 360.127 \text{ V}$$

2. Load impedance at fundamental frequency

$$Z_1 = [12^2 + (2\pi \times 50 \times 0.03)^2]^{1/2} = 15.2586\ \Omega$$

$$I_{o1} = \frac{V_{o1}}{Z_1} = \frac{360.127}{15.2586} = 23.6016 \text{ A}$$

$$V_{o3} = \frac{4 \times 400}{3\pi \times \sqrt{2}} = 120.042 \text{ V}$$

Scanned by TapScanner

$$Z_3 = \sqrt{12^2 + (2\pi \times 50 \times 3 \times 0.03)^2} = 30.715\ \Omega$$

$$I_{o3} = \frac{V_{o3}}{Z_3} = \frac{120.042}{30.715} = 3.908\ \text{A}$$

$$I_{o5} = \frac{4 \times 400}{\pi\sqrt{2} \times 5} \times \frac{1}{\sqrt{12^2 + (2\pi \times 50 \times 5 \times 0.03)^2}} = 1.481\ \text{A}$$

$$I_{o7} = \frac{4 \times 400}{7\pi\sqrt{2}} \times \frac{1}{\sqrt{12^2 + (2\pi \times 50 \times 7 \times 0.03)^2}} = 0.767\ \text{A}$$

$$I_o = \left[I_{o1}^2 + I_{o3}^2 + I_{o5}^2 + I_{o7}^2\right]^{1/2} = [23.60^2 + 3.908^2 + 1.481^2 + 0.767^2]^{1/2}$$

$$I_o = 23.981\ \text{A}$$

3. Power delivered to load

$$= I_o^2 R = 23.981^2 \times 12 = 6901.06\ \text{W} = 6.901\ \text{kW}$$

ii. Quasi-Square wave operation :

1. Assuming the ON-period of 0.5 for a cycle,
   Pulse width,

$$2d = 0.5 \times 180° = 90°$$

$$d = 45°$$

2. Rms value of fundamental voltage is

$$V_{o1} = \frac{4V_s}{\pi\sqrt{2}} \sin d = \frac{4 \times 400}{\pi\sqrt{2}} \sin 90° = 254.648\ \text{V}$$

$$I_{o1} = \frac{V_{o1}}{Z_1} = \frac{254.648}{15.25} = 16.689\ \text{A}$$

3. $$V_{o3} = \frac{4V_s}{3\pi\sqrt{2}} \sin 3\alpha \ \frac{4 \times 400}{3\pi\sqrt{2}} \sin(3 \times 45°) = 84.882\ \text{V}$$

$$I_{o3} = \frac{V_{o3}}{Z_3} = \frac{84.88}{30.715} = 2.772\ \text{A}$$

$$I_{o5} = \frac{V_{o5}}{Z_5} = \frac{4 \times 400}{5\pi\sqrt{2}} \sin(5 \times 45°) \times \frac{1}{\sqrt{144 + (2\pi \times 50 \times 0.03 \times 5)^2}}$$

$$= -1.047\ \text{A}$$

4. Similarly, $I_{o7} = -0.543\ \text{A}$

$$I_o = [I_{o1}^2 + I_{o3}^2 + I_{o5}^2 + I_{o7}^2]^{1/2} = 16.959\ \text{A}$$

5. Power delivered to load

$$= I_o^2 R = 16.95^2 \times 12$$

$$= 3451.173\ \text{W} = 3.451\ \text{kW}$$

PART-2

Three Phase Bridge Inverters.

CONCEPT OUTLINE

- Three phase bridge inverters are used to provide adjustable frequency.
- A basic three phase inverter is a six-step bridge inverter. It uses minimum of six thyristors.
- The modes of thyristor conduction are :

i. Three-phase 180 degree mode VSI.
ii. Three-phase 120 degree mode VSI.

Questions-Answers

Long Answer Type and Medium Answer Type Questions

Que 5.4. **Explain operation of a 3ϕ bridge inverter employing 120° mode of operation. Draw waveforms of phase voltages and any one line voltage assuming star connected resistance load.**

AKTU 2014-15, Marks 10

OR

Explain operation of three bridge inverter.

AKTU 2017-18, Marks 10

Answer

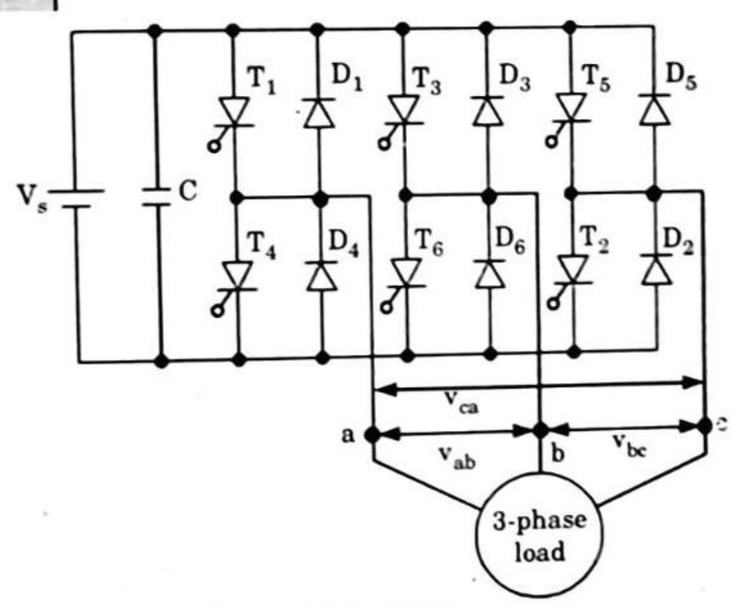

Fig. 5.4.1.

Scanned by TapScanner

1. The line voltages

$$v_{ab} = v_{ao} - v_{bo}$$
$$v_{bc} = v_{bo} - v_{co}$$
$$v_{ca} = v_{co} - v_{ao}$$

2. Each thyristor conducts for 120° in each cycle *i.e.*, for one-third cycle $T/3$. T_1 conducts for 120° and for next 60° neither T_1 nor T_4 conducts.
3. Now T_4 is turned on at $\omega t = 180°$ and then conduct for 120° *i.e.*, from $\omega t = 180°$ to $\omega t = 300°$, *i.e.*, for 60° interval from $\omega t = 120°$ to $\omega t = 180°$, series connected SCRs do not conduct. At $\omega t = 300°$, T_4 is turned OFF, then 60° interval elapses before T_1 is turned ON again at $\omega t = 360°$.
4. T_3 conducts for 120° then 60° interval elapses during which neither T_3 nor T_6 conducts. At $\omega t = 300°$, T_6 is turned ON, it conducts for 120° and then 60° interval elapses after which T_3 is turned ON again. During each step only two thyristors conduct for this inverter.

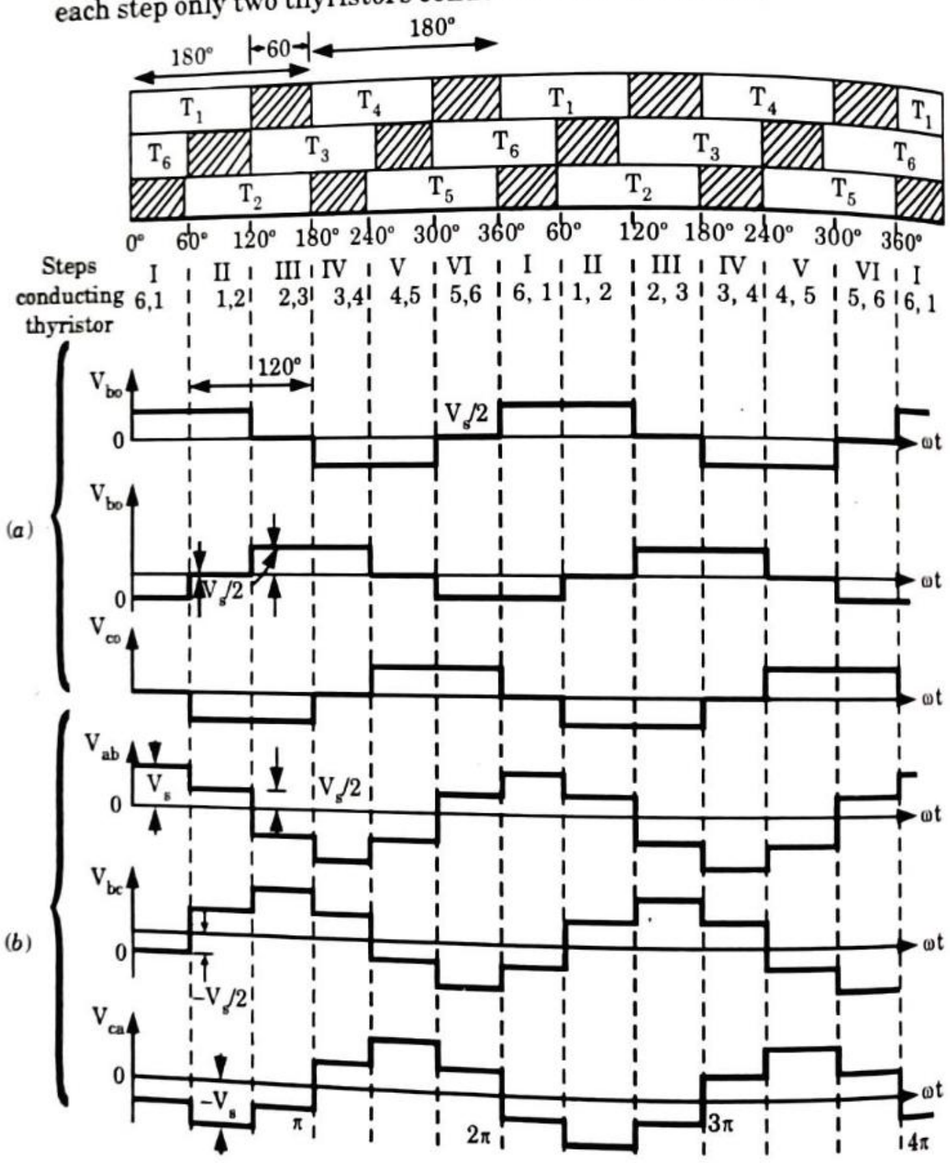

Fig. 5.4.2.

5.

Step 1 :

0° – 60°; 6, 1 closed $\quad v_{ao} = V_s/2$, $v_{bo} = -V_s/2$ and $v_{co} = 0$

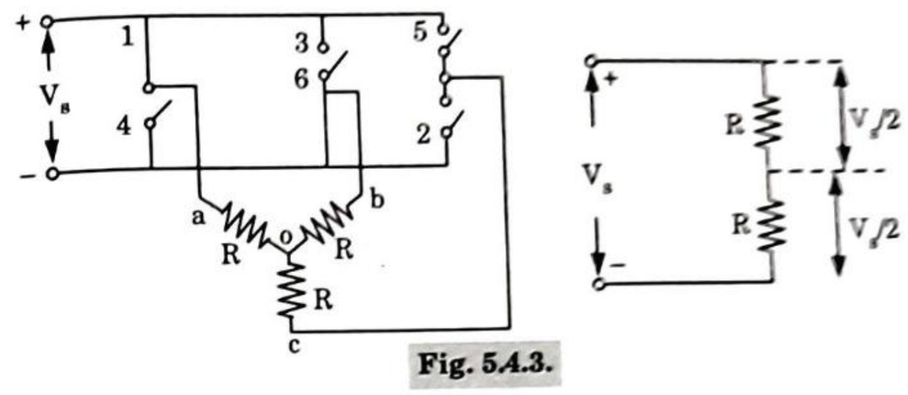

Fig. 5.4.3.

Step 2 :

60° – 120°; 1, 2 closed $\quad v_{ao} = V_s/2$, $v_{co} = -V_s/2$ and $v_{bo} = 0$

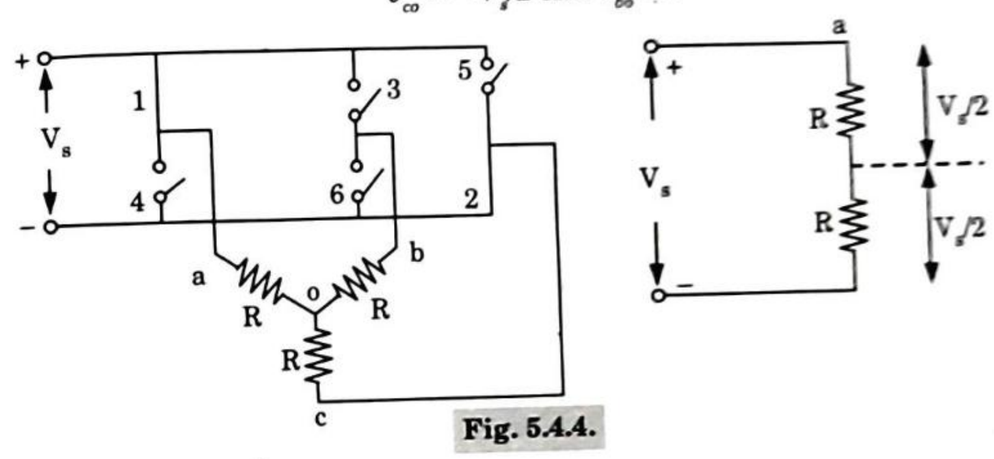

Fig. 5.4.4.

Step 3 :

120° – 180°; 2, 3 closed $\quad v_{bo} = V_s/2$, $v_{co} = -V_s/2$ and $v_{ao} = 0$

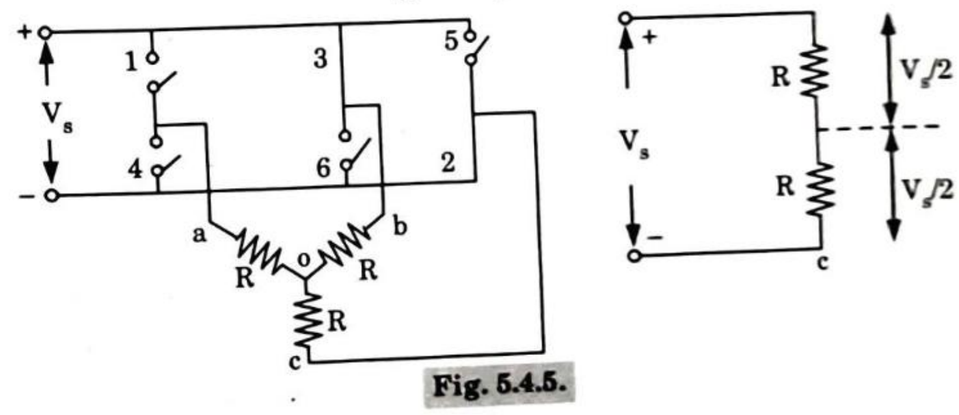

Fig. 5.4.5.

Scanned by TapScanner

Step 4 : 180° – 280°; 3, 4 closed $v_{bo} = V_s/2$

$v_{ao} = -V_s/2$ and $v_{co} = 0$,

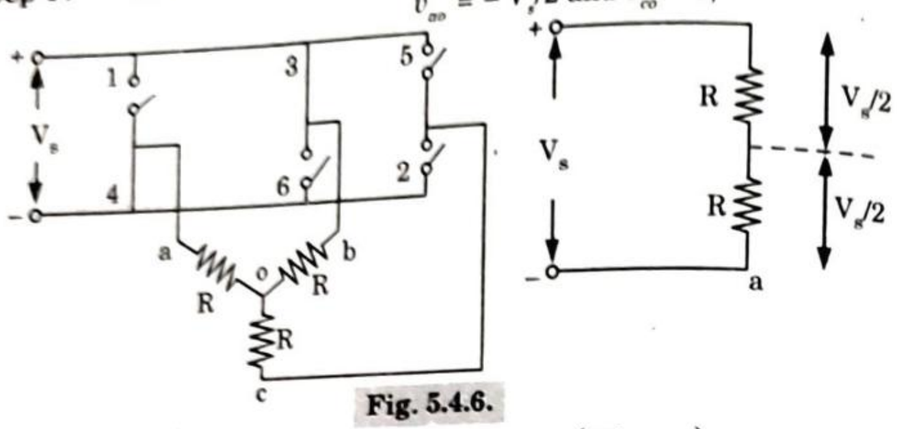

Fig. 5.4.6.

6. $$V^2_{prms} = \text{Average of } v^2_{ao} = \frac{1}{\pi}\left(\frac{V_s^2}{4} \times \frac{2\pi}{3}\right)$$

$$V_{prms} = \frac{V_s}{\sqrt{6}}$$

$$V_{ao} = \sum_{n=1,3,5}^{\infty} \frac{2}{n\pi} \cos\frac{n\pi}{6} \sin n\left(0 + \frac{\pi}{6}\right)$$

$$V_{plrms} = \frac{V_s}{\pi}\frac{\sqrt{3}}{2}$$

Harmonics produced by switching devices and unbalanced load.

7. Line voltage

$$V^2_{Lrms} = \text{Average of } V^2_{ab} = \frac{V_s^2}{2}$$

$$V_{Lrms} = \frac{V_s}{\sqrt{2}}$$

$$V_{Lrms} = \frac{1}{\sqrt{2}}\frac{3V_s}{2\pi}$$

Que 5.5. **Describe with neat circuit diagram and relevant waveforms the working of three-phase bridge inverter under 180° mode of conduction for a balanced star connected resistive load. Also state its merits and demerits over 120° mode.**

AKTU 2015-16, Marks 15

Answer

1. In the 3ϕ inverter each SCR conducts for 180° of a cycle. Thyristor pair in each arm *i.e.*, T_1, T_4, T_3, T_6 and T_5, T_2 are turned ON with time interval of 180°, *i.e.*, T_1 conducts for 180° and T_4 for next 180° of a cycle.
Circuit diagram of 3 phase bridge inverter : Refer Q. 5.4, Page 5–7A, Unit-5.

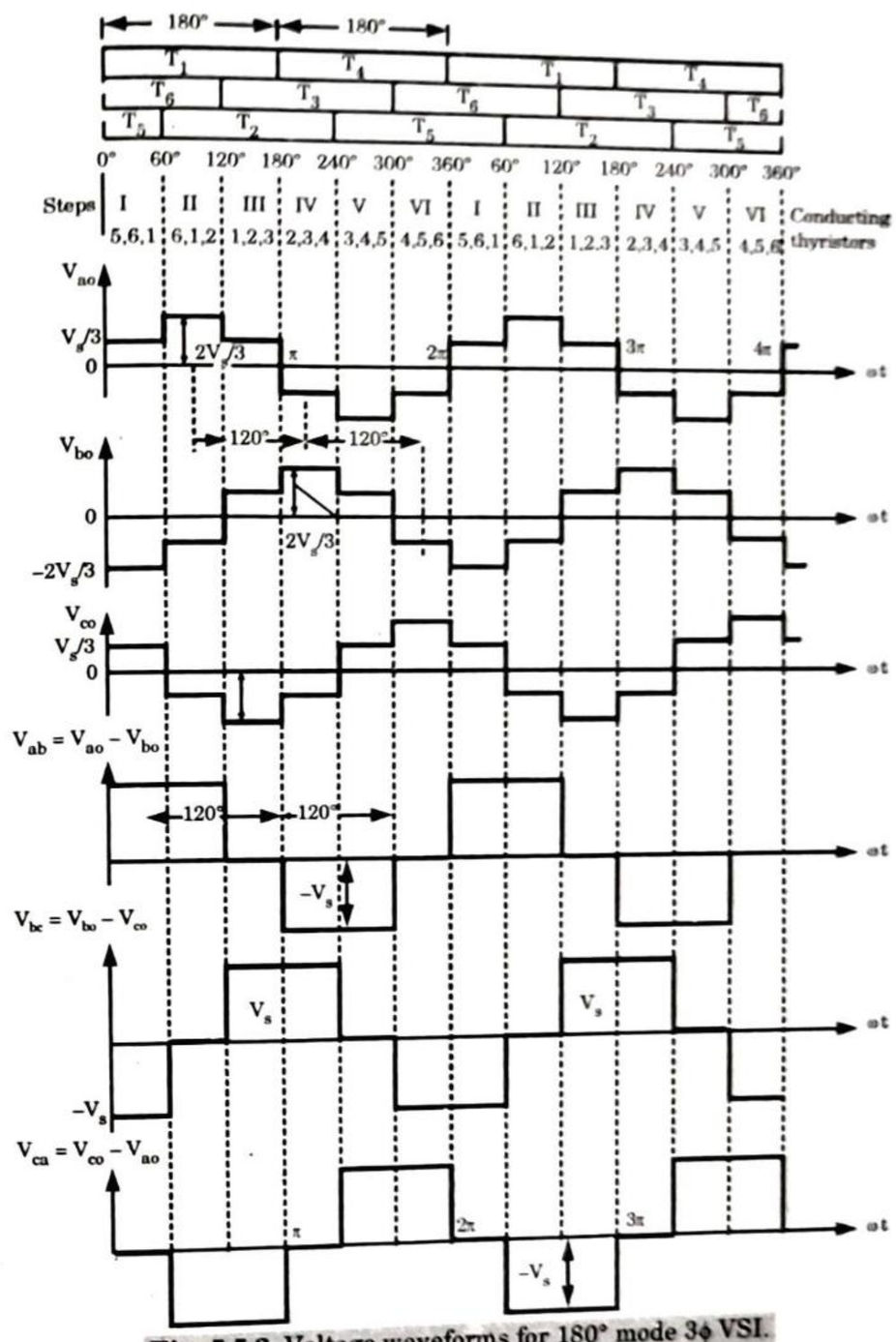

Fig. 5.5.2. Voltage waveforms for 180° mode 3ϕ VSI.

Scanned by TapScanner

2. Thyristor in upper group *i.e.*, T_1, T_3, T_5 conduct at an interval of 120°. So if T_1 is fired at $\omega t = 0°$ then T_3 must be fired at $\omega t = 120°$ and T_5 at $\omega t = 240°$. T_3 starts conducting 120° after T_1 starts conducting.

3. After T_3 conduction for 180°, T_6 conducts for next 180° and then T_3 again. T_5 starts conduction at 120° after T_3 or 240° after T_1. After T_5 conduction for 180°, T_2 conducts for next 180° and T_5 again and so on.

4.

Step 1 : 0° – 60°, 5, 6, 1 closed $V_{ao} = V_{co} = V_s/3$

$$V_{bo} = -V_{ab} = -2V_s/3$$

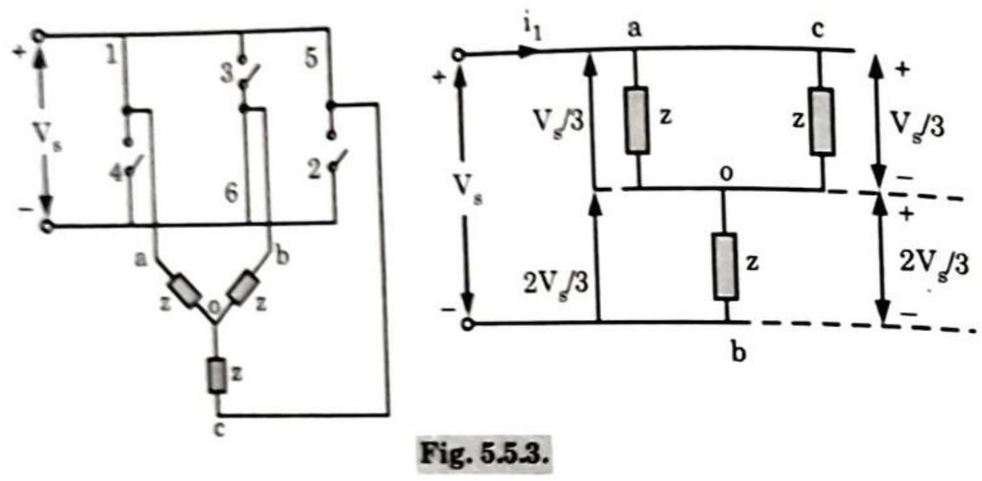

Fig. 5.5.3.

Step 2 : 60° – 120°; 6, 1, 2 closed $V_{ao} = V_s/3$

$$V_{bo} = V_{co} = -V_s/3$$

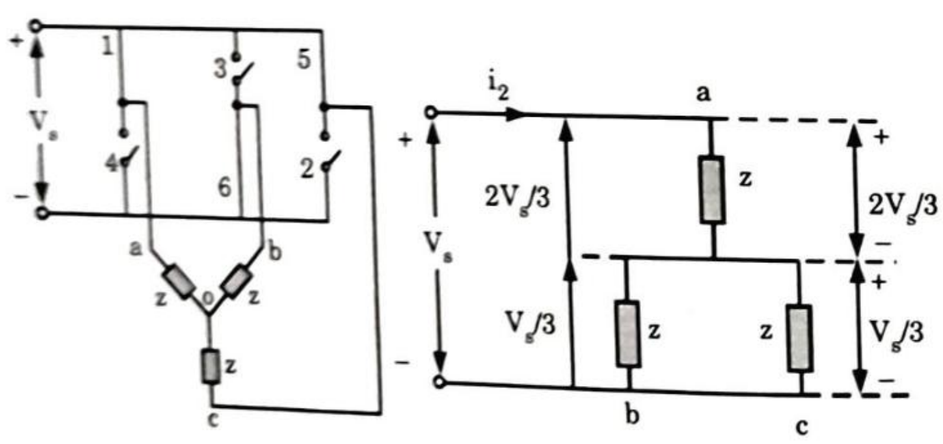

Fig. 5.5.4.

Step 3 : 120° – 180°; 1, 2, 3 closed $V_{ao} = V_{bo} = V_s/3$, $V_{co} = -2V_s/3$

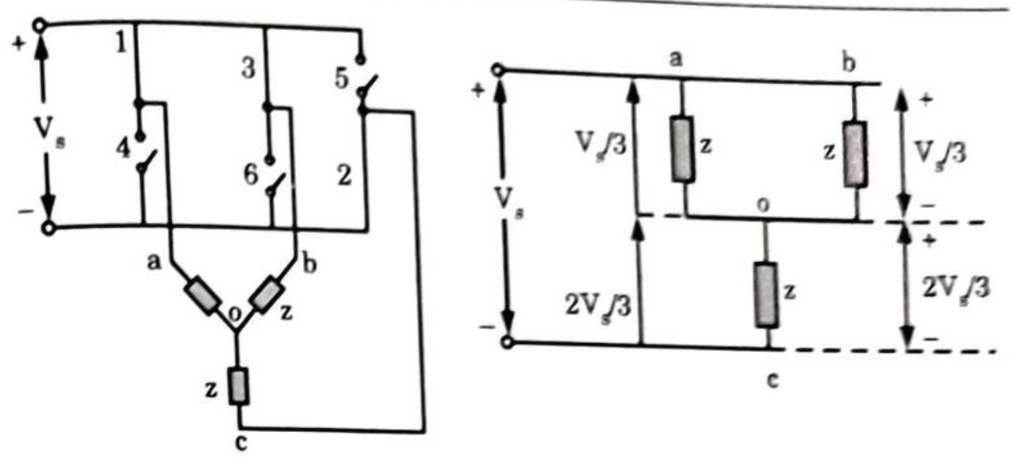

Fig. 5.5.5.

Step 4 : 180° – 240°; 2, 3, 4 closed $V_{bo} = 2V_s/3$

$$V_{ao} = V_{co} = -V_s/3$$

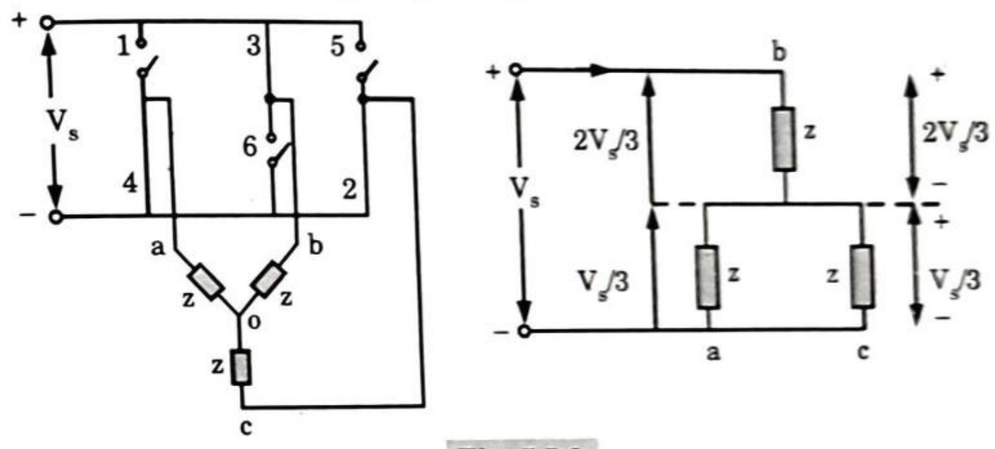

Fig. 5.5.6.

5. Rms value of nth component of line voltage

$$V_{Ln} = \frac{4V_s}{\sqrt{2}n\pi}\cos\frac{n\pi}{6}$$

6. Rms value of fundamental line voltage

$$V_{L1} = \frac{4}{\sqrt{2}}\frac{V_s}{\pi}\cos\frac{\pi}{6}$$

7. Rms value of line voltage

$$V_{Lrms} = \sqrt{\frac{2}{3}}V_s$$

8. Rms value of phase voltage

$$V_{prms} = \frac{V_L}{\sqrt{3}} = \frac{\sqrt{2}}{3}V_s$$

Rms value of fundamental phase voltage

Scanned by TapScanner

$$V_{rms} = \frac{2V_s}{\sqrt{3\pi}} = \frac{V_{dc}}{\sqrt{3}}$$

iii. Merits of 180° conduction mode over 120° conduction mode :

1. More stable than 120° conduction.
2. Three devices are better utilized.

iv. Demerits of 180° conduction mode over 120° conduction mode :

1. 120° conduction mode offers good commutation than 180°.
2. 180° mode have more losses than 120° mode.

Que 5.6. **The single phase quasi-square wave bridge inverter operates from a DC supply of 200 V at a frequency of 100 Hz and feeds a resistive load of 10 Ω calculate :**

i. Duration of the ON period if the rms value of the load voltage is 100 V.

ii. Peak supply current.

iii. Average DC supply current.

AKTU 2014-15, Marks 10

Answer

Given : $V_{dc} = 200$ V, $f = 100$ Hz, $R = 10\,\Omega$

To Find : α, I_p and I_{av}

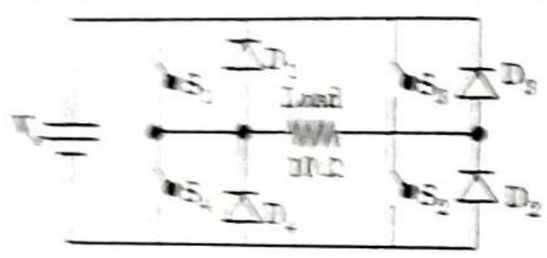

Fig. 5.6.1. Quasi-square wave bridge inverter.

i. $V_{rms} = 100$ V

Let α duration is α.

$$V_{rms} = \frac{4}{\sqrt{2\pi}}\frac{1}{\alpha}V_{dc}$$

$$100 = \frac{4}{\sqrt{2\pi}}\frac{1}{\alpha} \cdot 200$$

$$\alpha = 1.6 \text{ sec}$$

ii. Peak supply current

$$I_p = \frac{V_{dc}}{2R} = \frac{200}{2 \cdot 10} = 10 \text{ A}$$

iii. Average (DC) supply

$$I_{av} = \frac{I_p}{2} = \frac{10}{2} = 5 \text{ A}$$

PART-3

CSI.

CONCEPT OUTLINE

- **Current source inverter (CSI) :**

i. A CSI converts the input DC current to an AC current at its output terminals.

ii. The output frequency of AC current depends upon the rate of triggering the SCRs.

Questions-Answers

Long Answer Type and Medium Answer Type Questions

Que 5.7. **What do you mean by VSI and CSI ? Describe with neat circuit diagram, single phase auto sequential commutated CSI.**

AKTU 2013-14, Marks 10

Answer

A. **VSI :** Refer Q. 5.1, Page 5–2A, Unit-5.

B. **Current source inverter :**

1. A CSI converts the input DC current to an AC current at its output terminals. The output frequency of AC current depends upon the rate of triggering the SCRs.
2. The amplitude of AC output current can be adjusted by controlling the magnitude of DC input current.
3. CSI does not require any feedback diodes.

1ϕ auto-sequential commutated CSI :

1. It is an auto-sequentially commutated inverter. It has a current source rigged up with a DC supply.

Scanned by TapScanner

b. Operation :

i. Interval 1 :

1. It is assumed that the thyristors T_1 and T_4 are already conducting the load current $I_{ld} = I_{DC}$.
2. It flows through the positive terminal of the supply, smoothing inductor L, T_1, D_1, load, D_4, T_4 and negative terminal of the supply.

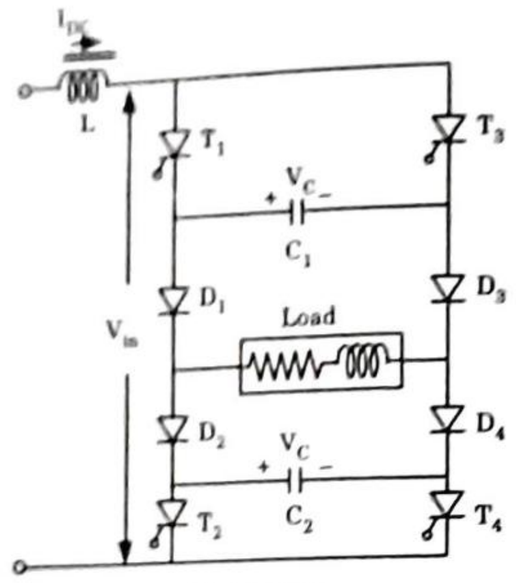

Fig. 5.7.1.

3. During previous half cycle it is assumed that the commutating capacitors C_1 and C_2 are charged to $+E_1$ volts and X_1 and X_2 plates have positive polarity. The voltage E_1 is greater than the load voltage Ri_{ld}.

ii. Interval 2 :

1. At time t_1 the thyristor T_2 and T_3 starts triggering and the capacitor C_1 and C_2 apply the reverse voltage across T_1 and T_4 resulting in their turn OFF.
2. Voltage across capacitor decays down. At t_2 the capacitor voltage attains the load voltage Ri_{ld} and D_3 and D_2 starts conducting.

iii. Interval 3 :

1. At t_2 the thyristors T_2 and T_3, all four diodes connect the load in parallel with the commutating capacitors.
2. An R-L-C circuit is formed consisting smoothing inductor, capacitor C_1 and C_2, load resistance and inductance along the current source which is driven by a current source.
3. A current oscillation starts and load current I_{ld} becomes zero and is reversed *i.e.*, becomes $-I_{ld}$. At t_3 commutating process terminates and D_1 and D_4 are reverse biased.

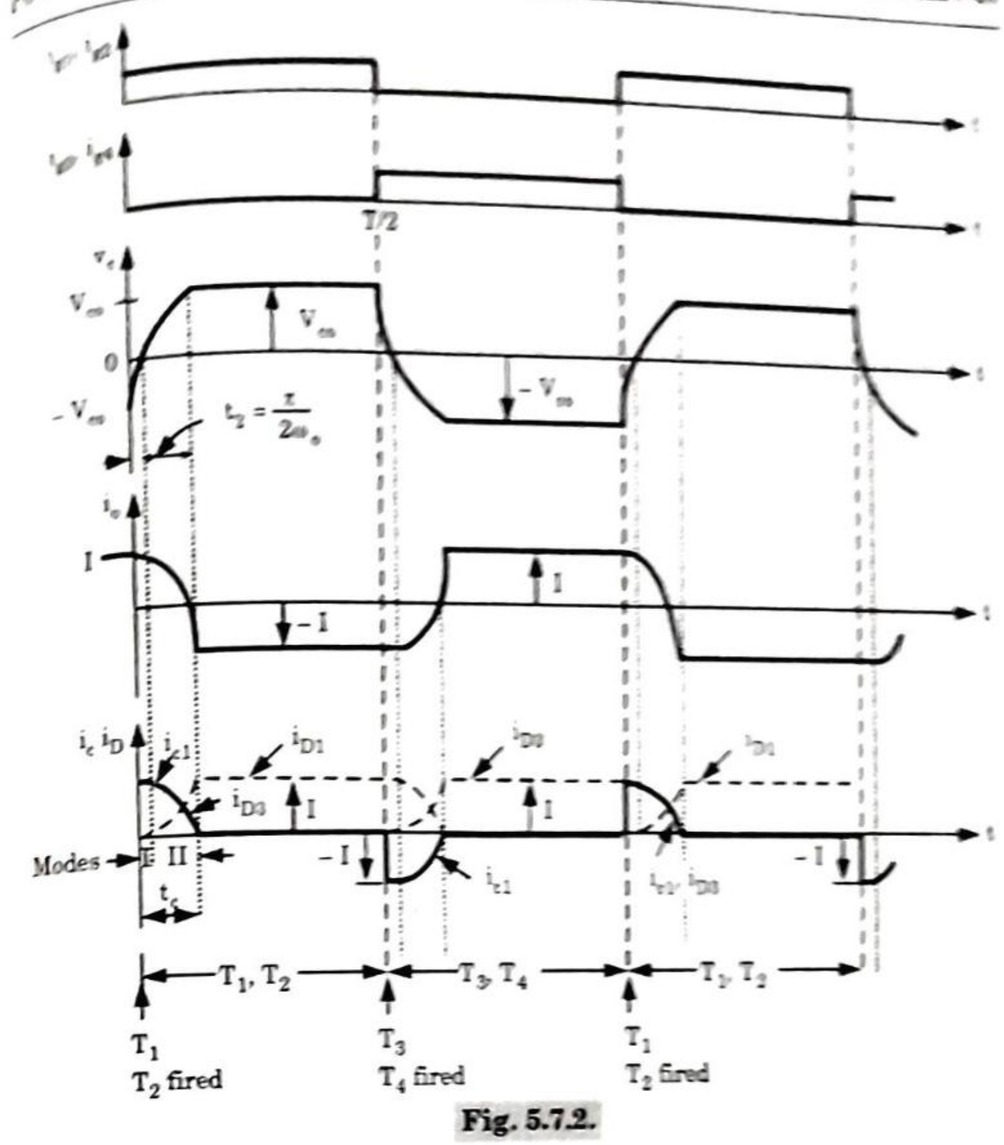

Fig. 5.7.2.

iv. Interval 4 :

1. The load current flows through T_3, D_3, the load, D_2 and T_2. The capacitor voltage is $-E_1$ with X_1 and X_2 at negative polarity and remains the same till the commutation of T_2 and T_3.
2. If T_1 and T_4 are triggered then T_2 and T_3 turn OFF and load current and voltage are reversed *i.e.*, become positive. The cycle repeats.
3. When at t_1, T_2 and T_3 are turned ON and input voltage V_{in} gets reversed and input current remains constant at positive value I_{ld}. The power at load is $-V_{in} I_{ld}$. The negative sign shows that the inductive energy of the load flows back to the DC source.

Que 5.8. **Describe with neat circuit diagram 3ϕ commutated current source inverter.**

Scanned by TapScanner

Answer

1. It consists of six thyristors T_1 to T_6 which are fired in a sequence for a period of 120°.

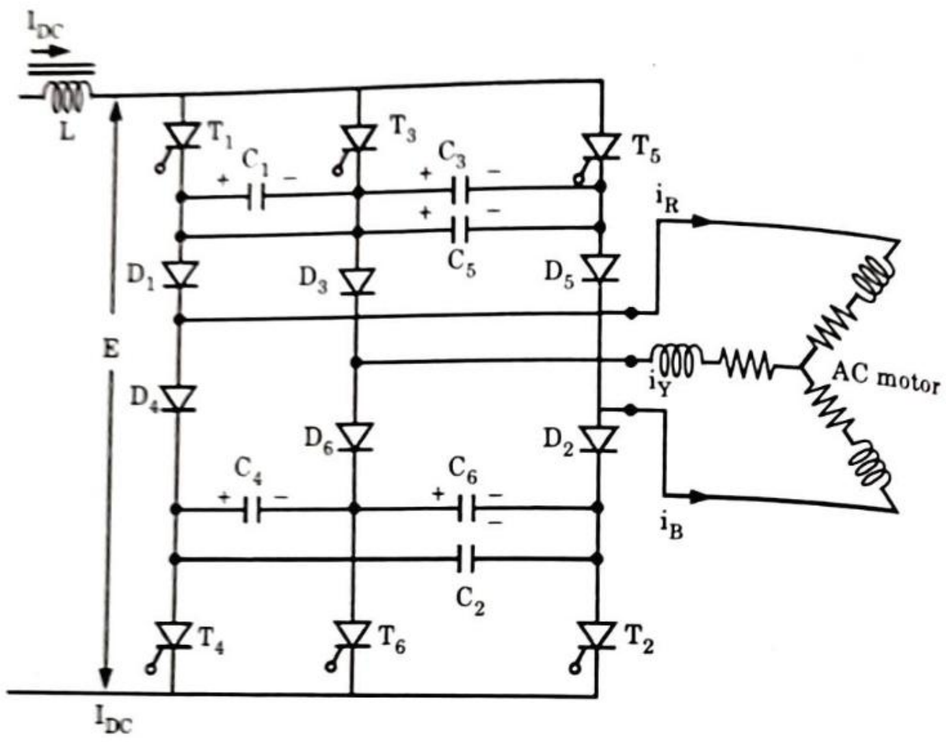

(a)

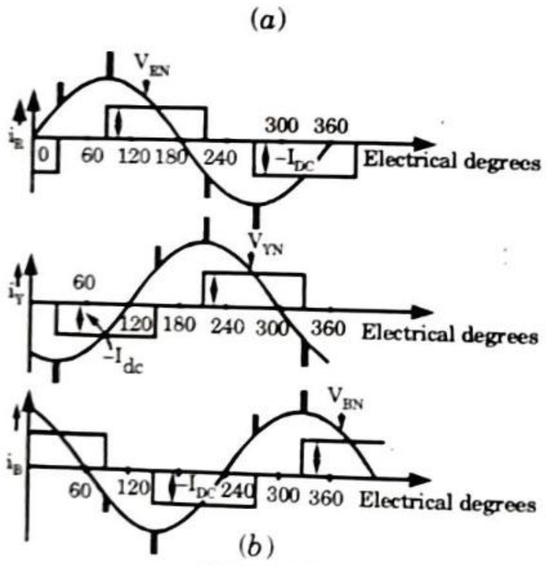

(b)

Fig. 5.8.1.

2. It has six capacitors C_1 to C_6 to store the energy for commutation and diodes D_1 to D_6 which isolate the load from the capacitors. The thyristors are gated in such a way so that each thyristor connects the load to positive and negative bus and conducting current through it.

3. It is assumed that initially circuit is in steady state and motor speed is constant.

Operation

i. **Interval 1 :** The thyristor T_1 and T_2 are fired and kept ON for some time and only the R and B phase of the load conduct current. The capacitors C_1, C_3 and C_5 are charged with voltages E_1, 0 and $-E_1$. At t_1, T_3 is fired and this interval terminates.

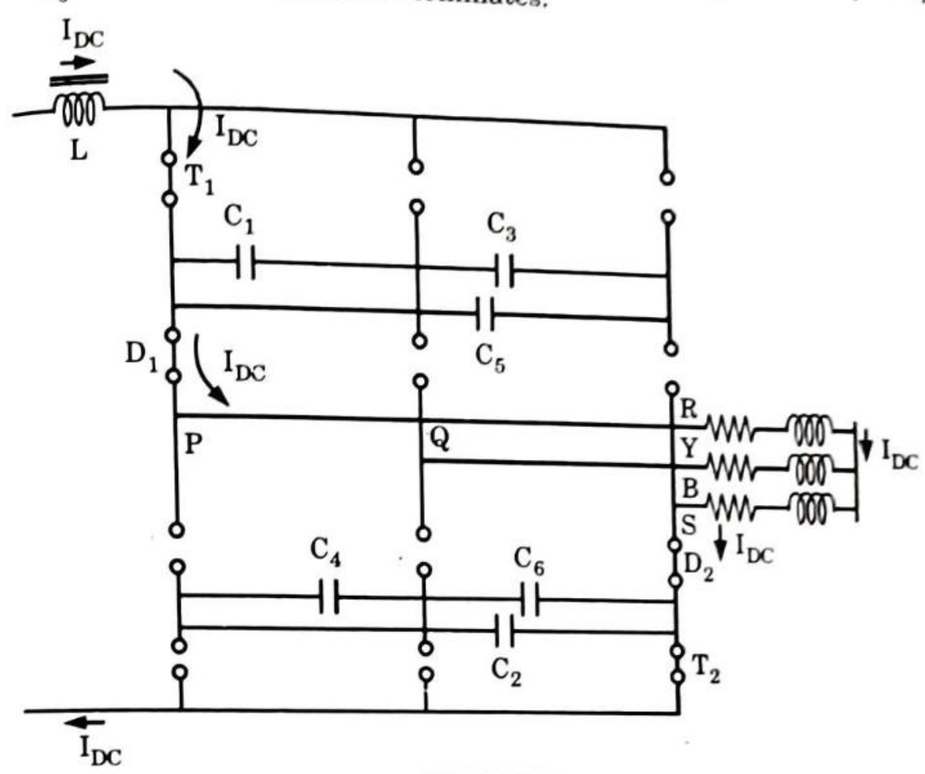

Fig. 5.8.2.

ii. **Interval 2 :**

1. When T_3 is fired the V_{c1} is applied across T_1 and turns it OFF. The load current flows through T_3, the capacitor C_1 in parallel to the series combination of C_3 and C_5, D_1, R and B phase windings of the motor load, T_2 and D_2.
2. The C_1 is charged linearly in reversed direction with source current I_{DC}.

$$V_{c1}(t) = \frac{1}{C_1}\int_0^t I_x dt = \frac{I_x t}{C_1}$$

where, I_x = Part of load curried I_{DC} which flows through branch containing C_1.

3. T_1 is reversed biased till V_{c1} becomes zero. The diode D_3 is reverse biased and motor current flows in R and B-phases. When D_3 is forward biased and starts conducting then this interval terminates.

Scanned by TapScanner

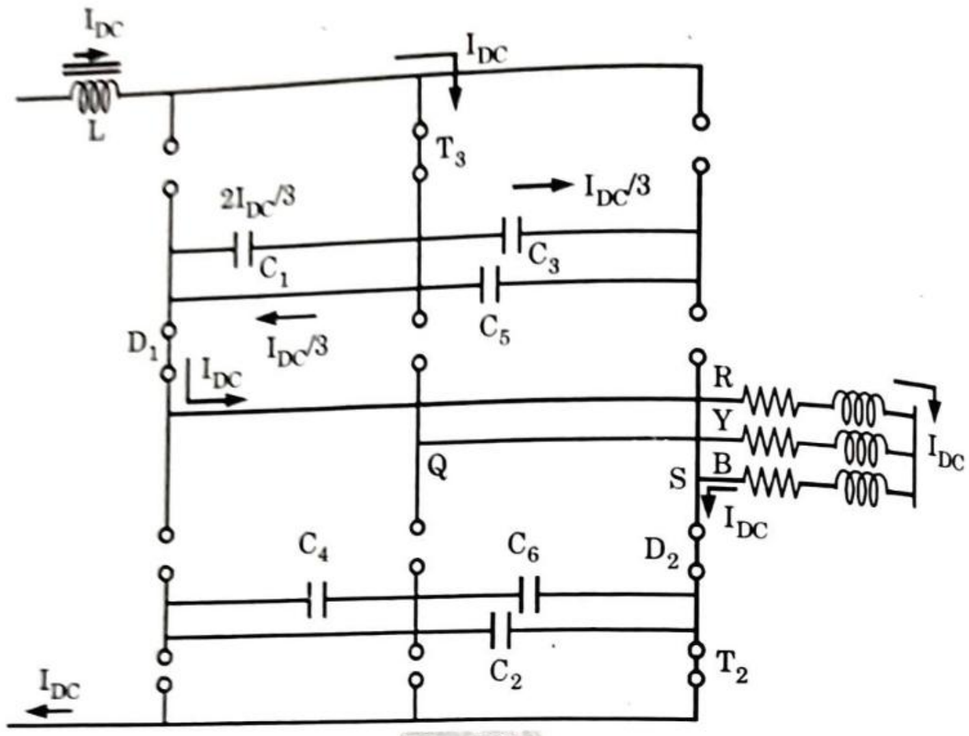

Fig. 5.8.3.

iii. Interval 3 :

1. In this interval the current gets transformed from R-phase winding to Y-phase winding. With D_1 still conducting, the capacitor combination C_1 in parallel with series combination of C_3 and C_5 are connected in parallel with motor winding through D_1 and D_3.
2. The R-L-C circuit consists of smoothing inductor L, capacitor bank and motor resistance and inductance.

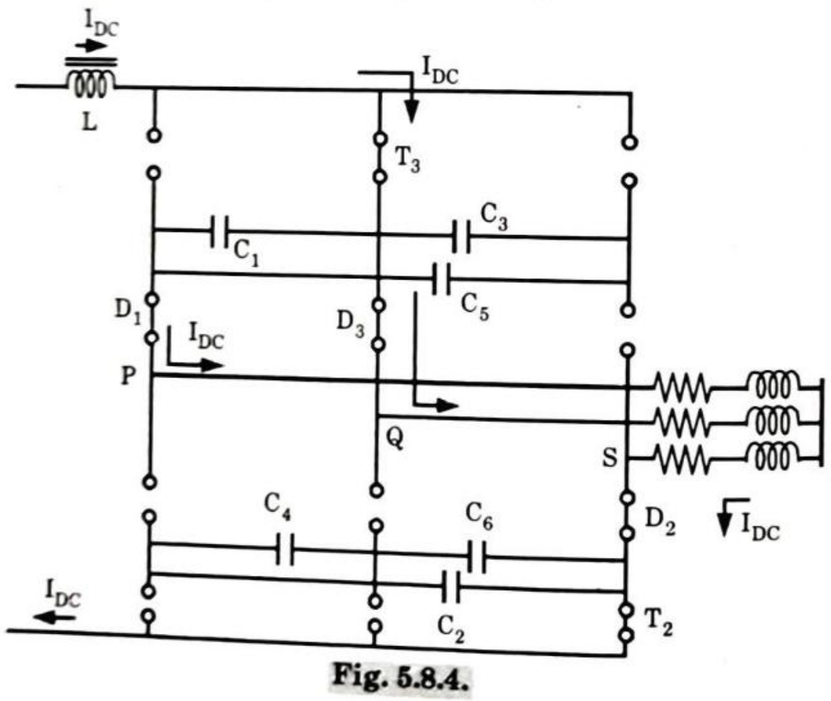

Fig. 5.8.4.

3. In quarter cycle the current in R-phase reduces from I_{DC} to 0 and in Y-phase increases from 0 to I_{DC}. The interval terminates when D_1 connected to R-phase stops conducting.

iv. Interval 4 : The source current I_{dc} flows through T_3, the Y-phase and R-phase of the motor winding, and T_2. This state remains till T_4 is gated to initiate the commutation of T_2. D_3 is connected at the junction of C_1 and C_3 so there is no path of discharge.

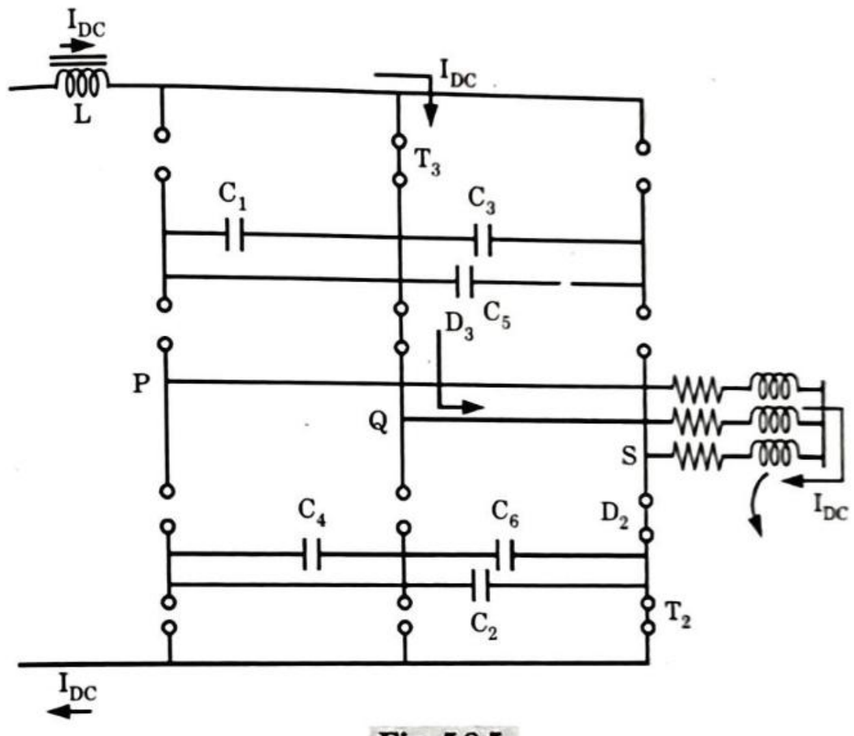

Fig. 5.8.5.

PART-4

Voltage Control of Single Phase Inverters.

Questions-Answers

Long Answer Type and Medium Answer Type Questions

Que 5.9. **What is the need for controlling the voltage at the output terminal of an inverter ? Describe briefly and compare the various methods employed for the control of output voltage of an inverter.**

AKTU 2016-17, Marks 15

Scanned by TapScanner

Answer

A. **Requirements :** AC loads require constant or adjustable voltage at their input terminals. When such loads are fed by inverters, it is essential that output voltage of the inverters is so controlled as to fulfill the requirement of AC loads.

B. **The various methods of the control of output voltage of inverters are :**

a. **External control of AC output voltage :** There are two methods to control AC output voltage :

i. **AC voltage control :**

1. In AC voltage control an AC voltage controller is inserted between the output terminals of inverter and load terminal.
2. The input voltage to the AC load is regulated through the firing angle control of AC voltage controller.
3. This gives rise to higher harmonics in the output voltage, when the output voltage from AC voltage controller is at low level. This method is employed for low power applications.

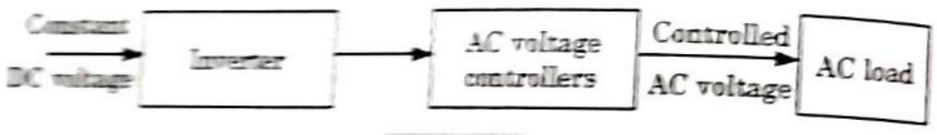

Fig. 5.9.1.

ii. **Series inverter control :**

1. In series inverter control method the voltage control involves the use of two or more inverters in series.
2. The output voltage of two inverters can be summed up with the help of transformers to obtain an adjustable output voltage.
3. The inverter output is fed to two transformers whose secondary are connected in series.

$$V_o = \left[V_{o1}^2 + V_{o2}^2 - 2V_{o1}V_{o2}\cos\theta\right]^{1/2}$$

4. The frequency of output voltages V_{o1}, V_{o2} must be same. When θ is zero, $V_o = V_{o1} + V_{o2}$ and for $\theta = \pi$, $V_o = 0$ in case $V_{o1} = V_{o2}$. The angle θ is varied by the firing angle control of two inverters. It is also called as multiple converter control.

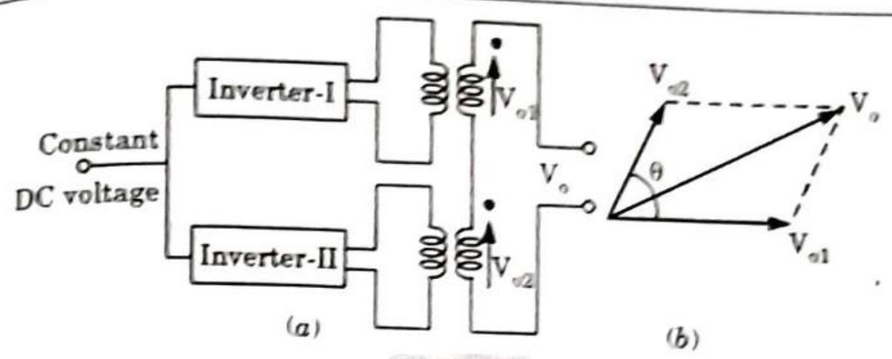

Fig. 5.9.2.

b. **External control of DC input voltage :**

1. When the voltage source is AC then DC voltage input to the inverter is controlled through a fully controlled rectifier or an uncontrolled rectifier and chopper or an AC voltage controller and an uncontrolled rectifier.
2. When DC voltage is available then DC input voltage to the inverter is controlled by a chopper.

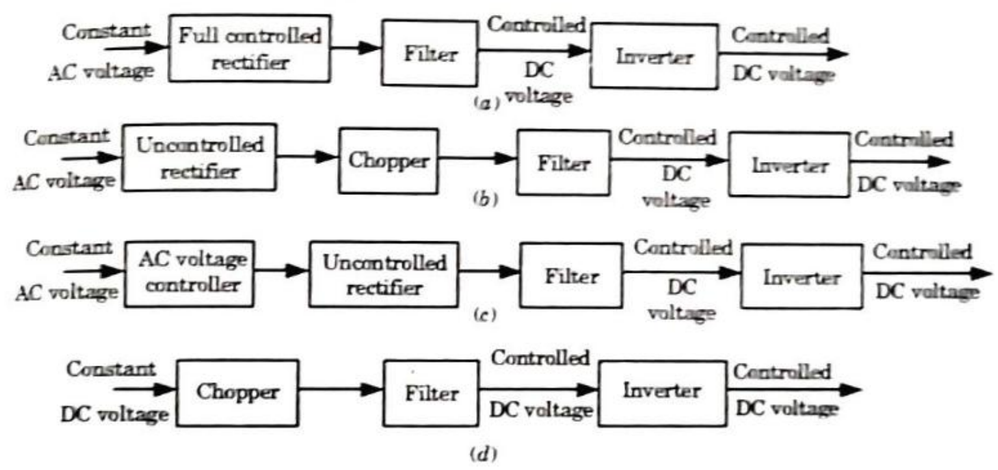

Fig. 5.9.3.

c. **Internal control of inverter :** Output voltage can be adjusted by exercising a control within the inverter itself. It is done by pulse width modulation.

PART-5

PWM Techniques.

Questions-Answers

Long Answer Type and Medium Answer Type Questions

Scanned by TapScanner

Que 5.10. **What is pulse width modulation (PWM)? Explain sinusoidal pulse width modulation used in PWM inverter.**

Answer

1. Pulse width modulation is the technique of varying the pulse duration of signal in proportion to the amplitude of the signal.

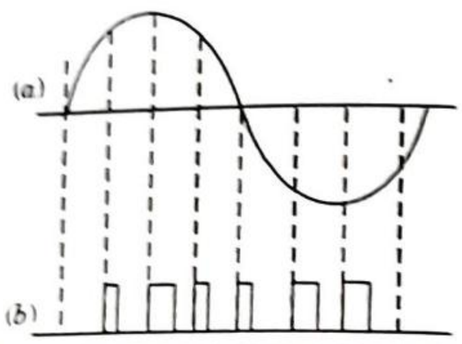

Fig. 5.10.1. (*a*) Signal and (*b*) PWM.

Sinusoidal Pulse Modulation in PWM Inverters :

1. In this method, several pulses per half cycle are used.
2. The pulse width is a sinusoidal function of angular position of the pulse in a cycle as shown in Fig. 5.10.2.

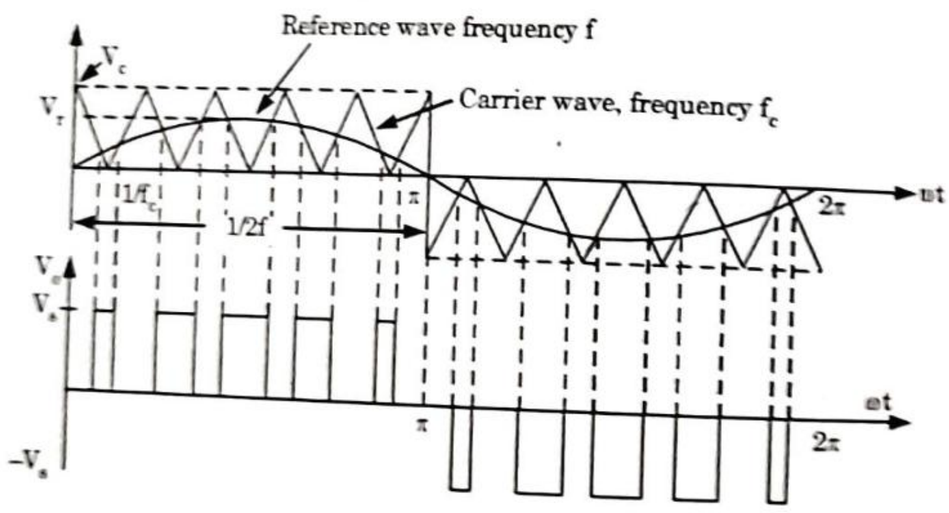

(*a*)

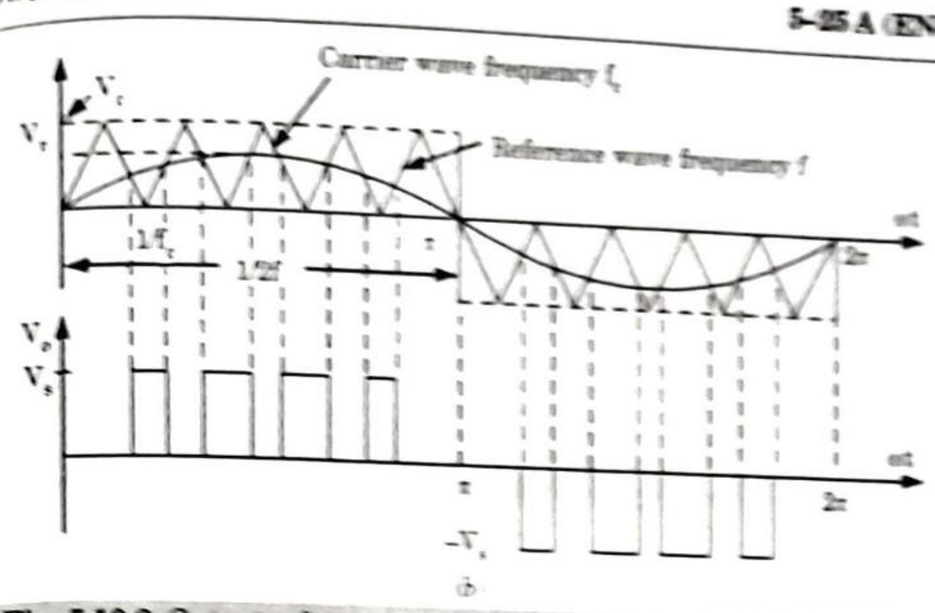

(*b*)

Fig. 5.10.2. Output voltage waveforms with sinusoidal pulse modulation.

3. Let us consider a high frequency triangular carrier wave V_c in comparison with sinusoidal reference wave V_r of desired frequency. The intersection of V_c and V_r waves determines the switching instants and commutation of the modulated pulse.
4. The carrier and reference waves are mixed in a comparator. When sinusoidal wave's magnitude is higher than that of triangular wave, comparator output is high, otherwise it is low.
5. This output is processed in a trigger pulse generator in such a manner that the output voltage wave of inverter has a pulse width in agreement with the comparator output pulse width.
6. When triangular carrier wave has its peak coincident with zero of reference sinusoid, there are $N = f_c / 2f$ pulses per half cycle.
7. In case zero of the triangular wave coincides with zero of the reference sinusoid, there are $(N - 1)$ pulses per half cycle. Fig. 5.10.2(*a*) has five pulses and (*b*) has $(f_c / 2f - 1)$ pulses *i.e.*, four pulses per cycle.

Que 5.11. **What is pulse width modulation ? Explain different types of pulse modulation.**

Answer

A. Pulse width modulation : Refer Q. 5.10, Page 5–24A, Unit-5.

B. Types of pulse modulation :

a. Sinusoidal modulation : Refer Q. 5.10, Page 5–24A, Unit-5.

b. Single phase modulation :

1. The output voltage from single phase full bridge inverter is shown in Fig. 5.11.1(*a*). When this waveform is modulated, the output voltage is of the form as shown in Fig. 5.11.1(*b*).

Scanned by TapScanner

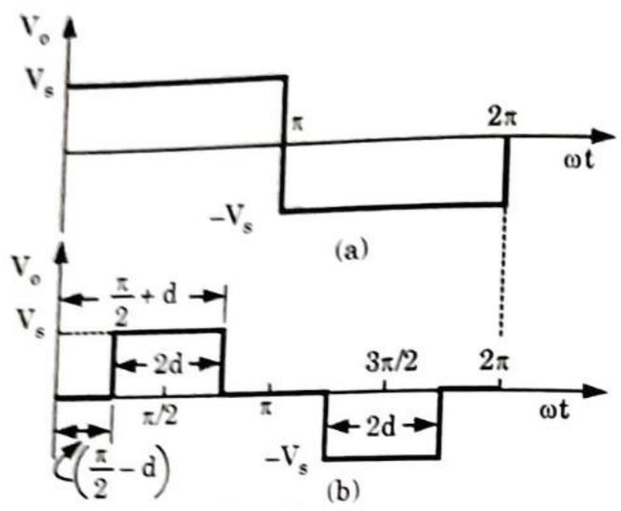

Fig. 5.11.1.

2. It consists of a pulse of width $2d$ located symmetrically about $\pi/2$ and another pulse located symmetrically about $3\pi/2$.
3. The range of pulse width $2d$ varies from 0 to π; *i.e.*, $0 < 2d < \pi$. The output voltage is controlled by varying the pulse width $2d$.
4. This shape of the output voltage wave shown in Fig. 5.11.1(b) is called quasi-square wave.

c. **Multiple-pulse modulation :** In multiple-pulse modulation (MPM), several equidistant pulses per half cycle are used. For simplicity, the effect of using two symmetrically spaced pulses per half cycle, Fig. 5.11.2.

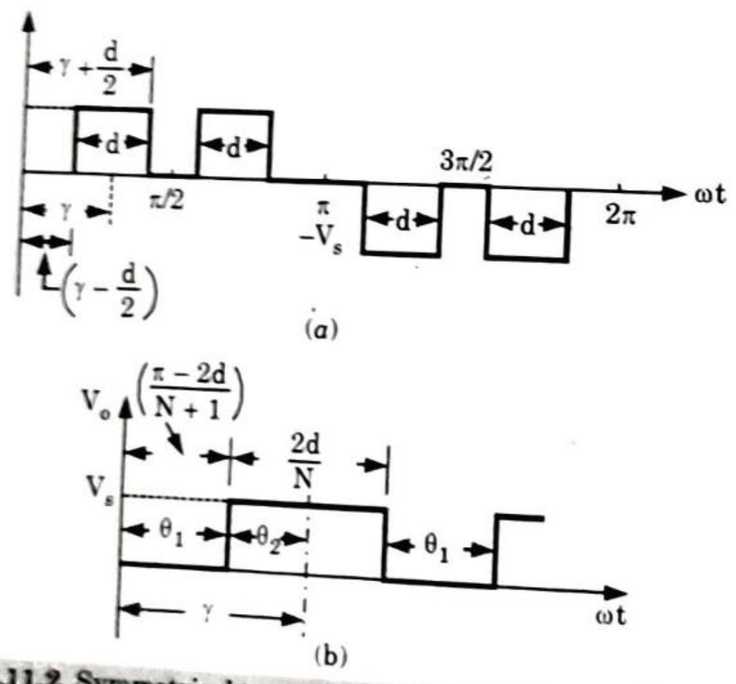

Fig. 5.11.2. Symmetrical two-pulse modulation pertaining to MPM.

PART-6

Introduction to Multi-level Inverter.

Questions-Answers

Long Answer Type and Medium Answer Type Questions

Que 5.12. **Discuss the concepts of multi-level inverter.**

Answer

1. Let us consider a three phase inverter system as shown in Fig. 5.12.1, with a DC voltage V_{DC}.
2. Series connected capacitors constitute the energy tank for the inverter providing some nodes to which the multilevel inverter can be connected.
3. Each capacitor has the same voltage E_m, which is given by

$$E_m = \frac{V_{DC}}{m-1}$$

where m denotes the number of levels.

An m-level inverter needs $(m - 1)$ capacitors.

4. Output phase voltages can be defined as voltages across output terminals of the inverter and the ground point.
5. Moreover, input node voltages and currents can be referred to input terminal voltages of the inverter with reference to ground point and the corresponding currents from each node of the capacitors to the inverter, respectively.
6. For example, input node (DC) voltages are designated by V_1, V_2, etc. and the input node (DC) currents by I_1, I_2 etc., as shown in Fig. 5.12.1(a).
7. V_a, V_b, and V_c, are the root-mean-square (rms) values of the line load voltages; I_a, I_b, and I_c, are the rms values of the line load currents.
8. In Fig. 5.12.1. (b) shows the schematic of a pole in a multilevel inverter where V_a indicates an output phase voltage that can assume any voltage level depending on the selection of node (DC) voltage V_1, V_2, etc.
9. Thus, a pole in a multilevel inverter can be regarded as a single-pole, multiple-throw switch.
10. By connecting the switch to one node at a time, one can obtain the desired output. Fig. 5.12.1 shows the typical output voltage of a five-level inverter.

Scanned by TapScanner

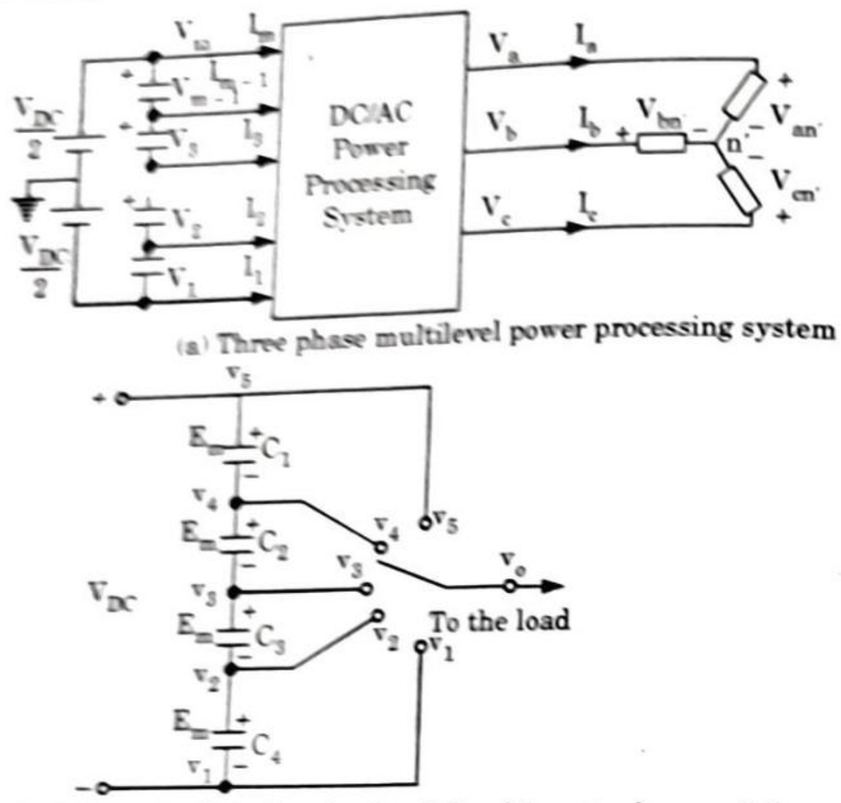

(a) Three phase multilevel power processing system

(b) Schematic of single pole of multilevel inverter by a switch.

Fig. 5.12.1. Multilevel inverters.

11. The multilevel inverter can be classified into three types :

i. Diode clamped multilevel inverter.

ii. Flying capacitors multilevel inverter.

iii. Cascade multilevel inverter.

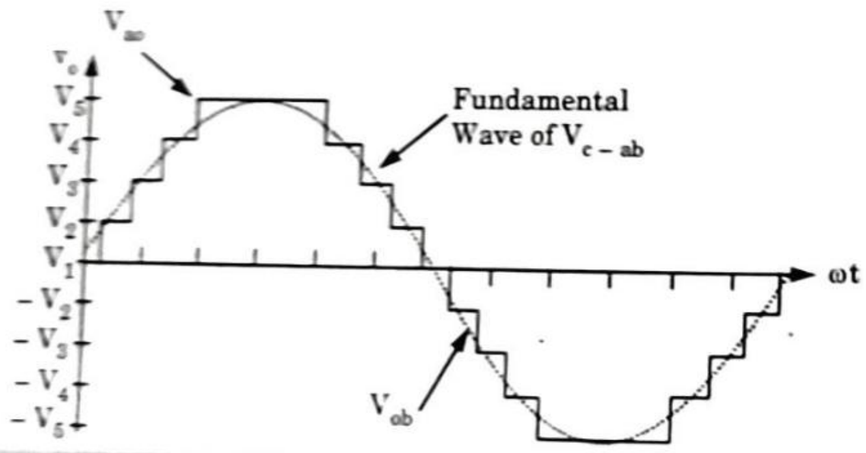

Fig. 5.12.2. Typical output voltage of a five-level multilevel inverter.

☺☺☺

1 UNIT

Power Semiconductor Devices (2 Marks Questions)

1.1. Classify power semiconductor devices.

Ans.

1. Diodes. 2. Thyristors. 3. Controllable switches.

1.2. Discuss the techniques which result in random turn-ON of a thyristor. **AKTU 2015-16, Marks 02**

Ans.

1. Forward voltage triggering.
2. *dv/dt* triggering.
3. Gate triggering.

1.3. A forward voltage is applied to a SCR soon after reverse recovery current drops nearly to zero value. Discuss, in brief, what would happen to SCR ?

AKTU 2015-16, Marks 02

Ans. When a forward voltage is applied, the junctions J_1 and J_3 are forward biased but J_2 is reverse biased. In this mode, a small current called forward leakage current flows. When the forward voltage is increased, then reverse biased junction J_2 will have an avalanche breakdown at a voltage called forward breakover voltage, when the forward voltage is less than this, SCR offers a high impedance and is treated as open switch.

1.4. What is the difference between primary and secondary breakdown in a power transistor ?

AKTU 2016-17, Marks 02

Ans.

S. No.	Primary breakdown	Secondary breakdown
1.	This breakdown in BJT takes place because of Avalanche breakdown of the collector base junction.	This breakdown takes place due to large collector currents.

Scanned by TapScanner

1.5. Why is the reverse breakdown voltage greater than forward breakdown voltage in SCR ? **AKTU 2016-17, Marks 02**

Ans. This is because the depletion layer width of J_2 is more in forward blocking state than the width of depletion layers of J_1 and J_3 in reverse blocking state.

1.6. What do you mean by holding current and latching current ? **AKTU 2017-18, Marks 02**

OR

Define 'latching current' and explain how is it different from 'holding current' ? **AKTU 2016-17, Marks 02**

Ans.

1. **Latching current :** The latching current is the minimum value to anode current which it must attain during turn ON process to maintain conduction when gate signal is removed.
2. **Holding current :** Holding current is the minimum value of anode current below which it must fall for turning OFF thyristor.

1.7. State the different power electronic converters available.

Ans.

1. Diode rectifiers
2. Phase controlled rectifiers
3. DC choppers
4. AC to AC converters
5. Cycloconverters.

1.8. Draw transfer characteristic of MOSFET. **AKTU 2017-18, Marks 02**

Ans.

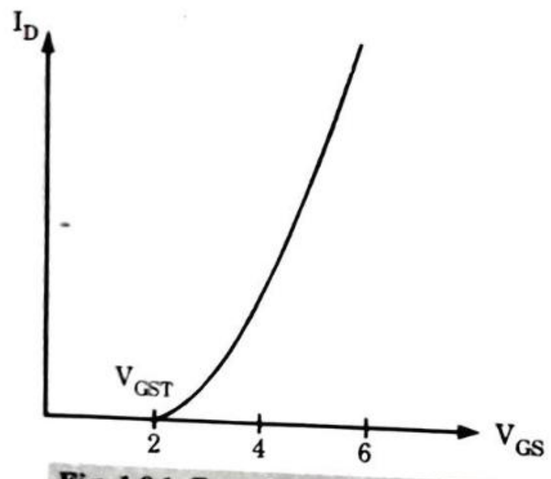

Fig. 1.8.1. Transfer characteristics.

1.9. What are the advantages of GTO over SCR ? **AKTU 2017-18, Marks 02**

Ans.

S. No.	Property	GTO	SCR
1.	Latching and holding currents	More	Less
2.	Triggering gate current	More	Less
3.	Switching speed	Fasther	Slow
4.	*di / dt* Rating	Higher	Lower

1.10. State the advantages of power converters. **AKTU 2016-17, Marks 02**

Ans.

1. Fast dynamic response due to static devices.
2. High efficiency of conversion due to low losses in electric devices.
3. Increased operating life and reduced maintenance since there are no moving parts.

1.11. Write the applications of IGBT.

Ans. IGBT is widely used in medium power applications such as *DC* and *AC* motor drive, UPS system, power supplies, drives for solenoids and relays.

1.12. What is power MOSFET ?

Ans. A metal-oxide-semiconductor field-effect transistor (MOSFET) is a device developed by combining the areas of field effect concept and MOS technology. A power MOSFET has three terminals called drain, source and gate. It is a voltage controlled device.

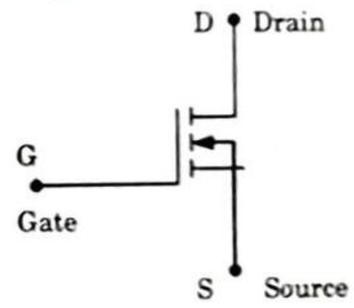

Fig. 1.12.1.

☺☺☺

Scanned by TapScanner

2 UNIT

Thyristor and DC-DC Converter (2 Marks Questions)

2.1. Define SCR ratings. **AKTU 2016-17, Marks 02**

Ans. It is the rating which indicates voltage, current, power and temperature limits within which a SCR can be used without damage and malfunction.

2.2. Explain the need for protection of power devices. **AKTU 2016-17, Marks 02**

Ans.
1. During SCR turn-ON, *di/dt* may be prohibitively large. There may be false triggering of SCR by high value of *di/dt*.
2. A spurious signal across gate-cathode terminals may lead to unwanted turn-ON. Then there is a possibility of damage to the thyristor so it requires protection against all such abnormal conditions.

2.3. State and explain the conditions for successful commutations. **AKTU 2016-17, Marks 02**

Ans. **Commutation :** The turn OFF process of SCR is called communication.

Condition :
1. The anode or forward current of SCR must be reduced to zero or below the level of holding current.
2. A sufficient reverse voltage must be applied across the SCR to regain its forward blocking state.

2.4. What is derating factor or DRF ?

Ans. A measure of the reliability of string is given by a factor called derating factor.

DRF = 1 – String efficiency.

2.5. How is SCR protected against abnormal conditions ?

Ans. We can protect the SCR by using two methods :

i. $\frac{di}{dt}$ protection

ii. $\frac{dv}{dt}$ protection

2.6. A number of SCRs each with a rating of 2000 V are to be used in series to handle 11 kV. For a derating factor of 0.2, calculate the number of SCRs to be used in string. **AKTU 2015-16, Marks 02**

Ans. Derating factor = 1 – String efficiency

$$0.2 = 1 - \frac{11000}{n_s \times 2000}$$

$$\frac{11}{2n_s} = 0.8$$

$$n_s = 6.87 \cong 7$$

2.7. A thyristor is having an inductance L = 15 μH, $E = \sqrt{2}230 \sin 314t$ and R_s = 10 Ω. Calculate the maximum value of di/dt and dv/dt for the SCR.

Ans.

$$\left(\frac{di}{dt}\right)_{max} = \left(\frac{V_s}{L}\right) = \frac{\sqrt{2} \times 230}{15 \times 10^{-6}} = 21.685 \text{ A/μsec}$$

$$\left(\frac{dv}{dt}\right)_{max} = R_s\left(\frac{di}{dt}\right)_{max} = 10 \times 21.685$$

$$= 216.85 \text{ V/μsec}$$

2.8. Define forced commutation.

Ans. In forced commutation, external elements L and C which do not carry the load current continuously, are used to turn-OFF a conducting thyristor. Forced commutation can be achieved in the following two ways :

i. Voltage commutation.

ii. Current commutation.

2.9. A step-up chopper has input voltage of 220 V and output voltage of 660 V. If non-conducting time of thyristor chopper is 100 μs, compute the pulse width of output voltage.

Ans.

$$V_o = V_s \frac{1}{1-\alpha}$$

$$660 = 220 \frac{1}{1-\alpha}, \quad \alpha = \frac{2}{3} = \frac{T_{ON}}{T}$$

$$T_{ON} = \frac{2}{3} T$$

Scanned by TapScanner

$$T_{off} = T - T_{on} = \frac{1}{3}T$$

$$\frac{1}{3}T = 100\ \mu s \text{ (given)}$$

$$T = 300\ \mu s \text{ and } T_{on} = \frac{2}{3} \times 300 = 200\ \mu s$$

2.10. Define string efficiency and state its significance in case of series and parallel connection of power devices.

AKTU 2016-17, Marks 02

Ans. **String efficiency :** String efficiency of SCRs connected in series/parallel is defined as

$$\text{String efficiency} = \frac{\text{Total voltage / current rating of the whole string}}{\text{(Individual voltage / current rating of SCR)} \times \text{(Number of SCRs in series / parallel in the string)}}$$

Significance : String efficiency is used for measuring the degree of utilization of SCRs in string.

2.11. What are the applications of DC chopper ?

AKTU 2017-18, Marks 02

Ans.

1. Choppers are used for DC motor control.
2. Solar and wind energy conservation.
3. It's also used in electric cars.
4. Airplane and spaceships, where onboard-regulated DC power supplies are required.

2.12. What is mean by step-up and step-down chopper ?

AKTU 2017-18, Marks 02

Ans.

1. **Step down chopper :** The output voltage is less than the input voltage.
2. **Step up chopper :** The output voltage is greater than the input voltage.

2.13. A step down chopper switched at 1 kHz with a duty ratio $\alpha = 0.5$. Find out the peak to peak ripple in load current.

AKTU 2015-16, Marks 02

Ans. Duty ratio, $\alpha = 0.5$

Assuming a supply of 100 V and the value of inductor is 200 mH and resistor is 5 Ω.

$$T = \frac{1}{1 \times 10^{3}} = 10^{-3} \text{ sec}$$

$$T_o = \frac{L}{R} = \frac{200 \text{ mH}}{5\ \Omega} = 40 \text{ msec}$$

$$\text{Ripple} = \frac{V_o}{R}\left[\frac{(1 - e^{-\alpha T/T_o})(1 - e^{(1-\alpha)T/T_o})}{1 - e^{-T/T_o}}\right]$$

$$(\Delta I)_{max} = \frac{V_o}{4fL} = \frac{100}{4 \times 10^{3} \times 200 \times 10^{-3}}$$

$$= 0.125 \text{ A}$$

☺☺☺

Scanned by TapScanner

3 UNIT

Phase Controlled Converters (2 Marks Questions)

3.1. What are the advantages of single phase bridge converter over single phase mid-point converter ?

AKTU 2017-18, Marks 02

Ans.

1. SCRs are subjected to a peak inverse voltage of $2V_m$ in mid-point converter and V_m in single phase converter.
2. In mid-point converter each secondary should be able to supply the load power. Whereas it is not the case in single-phase bridge converter.

3.2. Define delay angle.

Ans. It is the angle at which thyristors are triggered after zero crossing. After zero crossing, one pair of thyristor get forward biased and SCRs are triggered.

3.3. What is the basic difference between 'freewheeling diodes' and 'feedback diodes' ?

AKTU 2016-17, Marks 02

Ans.

S. No.	Freewheeling diodes	Feedback diodes
1.	If the load is inductive, an antiparallel diode called freewheeling diode is connected across the load to provide a path for inductive current flow.	Trapped energy of an inductive load can be feedback to supply through a diode known as feedback diode.
2.	It is connected in antiparallel with load.	It connected in series with load.

3.4. Discuss the advantages of using freewheeling diode in phase controlled rectifiers.

AKTU 2015-16, Marks 02

Ans. The advantage of using freewheeling diode in phase controlled rectifier is that the load current is improved.

3.5. State the advantages of three-phase converters over single-phase converters.

Ans.

1. In 3ϕ converters, the ripple frequency of the converter output voltage is higher than in 1ϕ converter.
2. The load current is mostly continuous in 3ϕ converters.

3.6. Explain the effect of source impedance on converters.

Ans. The source possesses internal impedance. If the source impedance is resistive, then there will be a voltage drop across the resistance and the average voltage output of a converter get reduced by an amount equal to $I_0 r_s$ for a single-phase converter and by $2 I_0 r_s$ for a three-phase converter.

3.7. Show the variation of converter output average voltage as a function of firing angle for (1) semi-converter and (2) full-converter.

AKTU 2015-16, Marks 02

Ans.

1. Average output voltage for semi-converter,

$$V_0 = \frac{V_m}{2\pi}(1 + \cos\alpha)$$

2. Average output voltage for full-converter,

$$V_0 = \frac{2V_m}{\pi}\cos\alpha$$

3.8. Differentiate between half controlled and fully controlled rectifier.

Ans.

S. No.	Half controlled converter	Fully controlled converter
1.	Output voltage is always positive.	Output voltage can be negative.
2.	Power factor is better.	Power factor is poorer than half converter.

3.9. Differentiate between circulating and non-circulating current.

Scanned by TapScanner

Ans.

S. No.	Circulating current	Non-circulating current
1	In this, both converters are always ON.	In this, only one converter is ON and other is OFF.
2.	The efficiency of circulating current dual converter is low.	Efficiency of non-circulating current is higher.

3.10. Write the effect of load inductance on the three- phase bridge rectifier.

Ans.
1. Due to inductive loads power factor will be reduced.
2. Ripples present in output current get reduced.
3. Output current becomes continuous.

3.11. Give the reason why power factor of semi-converter is better than full converter.

Ans. Semiconductor contains freewheeling diode. Due to this the inductive energy stored in the load is utilized in the load itself. Because of this, displacement factor will be improved. Hence power factor of semi-converter is better.

3.12. Give the reason why output current is positive in single-phase full converter.

Ans. This is because, in both converter and inverter modes thyristors must be forward biased and current through SCRs must flow in the same direction as these are unidirectional devices. Therefore output current is positive.

3.13. A 3-phase dual converter, operating in the circulating-current mode, has the per phase-supply voltage = 230 V, f = 50 Hz, α_1 = 60°, current limiting reactor, L = 150 mH. Calculate the peak value of circulating current.

Ans. For $\alpha_1 = 60°$

$$i_{cp} = \frac{\sqrt{3}\,\sqrt{6}230}{2\pi \times 50 \times 15 \times 10^{-3}}\,[1 - \sin 60°]$$

$$= 27.7425 \text{ A}$$

☺☺☺

4 UNIT

AC Voltage Controllers and Cycloconverters (2 Marks Questions)

4.1. What are the advantages and disadvantages of ON-OFF control ? **AKTU 2017-18, Marks 02**

Ans.
1. **Advantages :** The SCRs are switched ON at zero crossings. Hence the harmonics due to switching actions are reduced.
2. **Disadvantages :** A full supply voltage is applied across the load during ON period and load voltage is zero during the OFF period. Hence the load voltage is not smooth rather it is intermittent. The load has to sustain these variations.

4.2. What are the advantages and disadvantages of phase angle control ? **AKTU 2017-18, Marks 02**

Ans. **Advantages :**
1. It can deliver more power.
2. During high power, it contains less harmonics in output.

Disadvantages :
1. 3ϕ controller is complex to control.
2. It is not used in resistive loads.

4.3. Write the applications of AC voltage controllers.

Ans.
1. Domestic and industrial heating.
2. Transformer tap changing.
3. Lighting control.
4. Speed control of single-phase and three-phase AC drives.

4.4. What are the disadvantages of AC voltage controllers ?

Ans. Harmonics in the supply current and load voltage waveforms are present particularly at reduced output voltage levels.

4.5. Differentiate between ON-OFF control and phase-control.

Scanned by TapScanner

Ans.

S. No.	ON-OFF control	Phase control
1.	They start only at zero firing angle.	They start at non-zero angle.
2.	Output voltage is highly discontinuous.	Output voltage is less discontinuous.

4.6. What is the disadvantage of using pulse gating scheme in AC voltage controller when the load is R-L ?

AKTU 2015-16, Marks 02

Ans. The AC voltage controller gives asymmetrical output voltage waveform when pulse gating is applied due to the conduction of only one thyristor.

4.7. A single-phase voltage controller has input voltage of 230 V, 50 Hz. For 6 cycles ON and 4 cycles OFF, determine the rms output voltage.

Ans. The rms value of output voltage is

$$V_{or} = V_s \sqrt{\frac{n}{n+m}} = 230 \sqrt{\frac{6}{6+4}}$$

$$V_{or} = 230 \times 0.77 = 178.157 \text{ V}$$

4.8. A single-phase controller has input voltage of 220 V, 50 Hz and a load of $R = 10\ \Omega$. The ON-cycle is 8 and the OFF-cycle is 5, then determine the power factor.

Ans.

$$\text{Input } pf = \sqrt{K} = \sqrt{\frac{n}{n+m}} = \sqrt{\frac{8}{8+5}} = \sqrt{\frac{8}{13}} = \sqrt{.615}$$

$$= 0.784 \text{ lag}$$

4.9. What is a cycloconverter ? Enumerate some of its industrial applications.

AKTU 2015-16, Marks 02

OR

What is a cycloconveter ?

AKTU 2017-18, Marks 02

Ans.

A. Cycloconverter : A cycloconverter is a direct frequency changer that converts AC power at one frequency to AC power at another frequency by AC-AC conversion, without an intermediate conversion link.

B. Applications :

1. Induction heating
2. Static VAR generation
3. Speed control of high power AC drives

4.10. What are advantages and disadvantages of cycloconverter ?

AKTU 2017-18, Marks 02

Ans.

A. Advantages :

1. No DC link required as in case of inverters to get sine waveforms.
2. Bidirectional power flow possible.

B. Disadvantages :

1. Smooth step less control of output frequency is not possible.
2. More distortion at low frequency.
3. Control circuit is difficult to design and complex.

4.11. What is load commutated cycloconverters ?

Ans. In this, the thyristors are commutated by the reversal of the load voltage. This implies that the load circuit must have a generated emf that should be independent of the source voltage. The most usual example for such a load is wound field or permanent magnet synchronous machine.

4.12. What is step-down cycloconverter ?

Ans. In this, the output frequency f_o is lower than the supply frequency f_s *i.e.*, $f_o < f_s$.

4.13. What is step-up cycloconverters ?

Ans. The output frequency f_o is greater than the supply frequency f_s *i.e.*, $f_o > f_s$.

4.14. What is negative converter group ?

Ans. The converter circuit permitting the flow of current during the negative half cycle of output current is called negative converter group.

4.15. Write the output voltage equation for a cycloconverter.

Ans. Instantaneous phase voltage is

$$v = V_m \cos \omega t = \sqrt{2}\, V_{pn} \cos \omega t$$

where V_{pn} = rms value of per phase supply voltage.

☺☺☺

Scanned by TapScanner

5 UNIT

Inverters (2 Marks Questions)

5.1. What is an inverter ?

Ans. A device that converts DC power into AC power at desired output voltage and frequency is called an inverter.

5.2. What is a line commutated inverter ?

AKTU 2015-16, Marks 02

Ans. Phase controlled converters, when operated in the inverter mode are called line commutated inverters.

5.3. Write the applications of inverter.

Ans.
1. Adjustable speed AC drives.
2. Inductor heating.
3. Stand by air-craft power supplies.
4. UPS for computers.
5. HVDC transmission line.

5.4. What is the purpose of connecting diodes in antiparallel with thyristors in inverter circuits ?

AKTU 2015-16, Marks 02

Ans. The purpose of connecting diodes in antiparallel with thyristors in inverter circuits is that for resistive loads, current will not be in phase with voltage and therefore, diodes are connected in antiparallel with thyristors to allow the current to flow when the main thyristors are turned OFF.

5.5. Write the applications of CSI.

Ans.
1. Speed control of AC motors.
2. Induction heating.
3. Lagging VAr compensation.
4. Synchronous motor starting.

5.6. Differentiate between CSI and VSI.

Ans.

S. No.	CSI	VSI
1.	Input current is constant but adjustable. The amplitude of output current is independent of load.	Input voltage is maintained constant and the amplitude of output voltage does not depend on the load.
2.	The waveform of load current as well as its magnitude depends upon the nature of load impedance.	The waveform output from CSI is dependent upon the nature of load impedance.
3.	It does not require any feedback diodes.	The VSI requires feedback diodes.

5.7. State the advantages of pulse width modulation.

Ans.
1. The output voltage control with this method can be obtained without any additional components.
2. With this method, lower order harmonics can be eliminated or minimized along with its output voltage control. As higher order harmonics can be filtered easily, the filtering requirement are minimized.

5.8. What is the main disadvantage of the pulse width modulation ?

Ans. The main disadvantage of this method is that the SCRs are expensive as they must possess low turn-ON and turn-OFF times.

5.9. Write the method of controlling output voltage of inverter.

Ans.
1. Single pulse width modulation.
2. Multiple pulse width modulation.
3. Sinusoidal pulse width modulation.
4. Modified sinusoidal pulse width modulation.

5.10. Write the need of voltage control in an inverter.

Ans. The DC input to the inverter is battery or rectified DC. This input fluctuates depending upon the battery discharge or variation in mains. Output of the inverter should remain constant irrespective of variations of input DC or load condition. Hence it is necessary to control the voltage of inverter.

5.11. Differentiate between 120° and 180° modes of conduction.

Scanned by TapScanner

Ans.

S. No.	120° Mode	180° Mode
1.	Two devices conduct in one interval.	Three devices conduct in one interval.
2.	Line voltage is six-step waveform with $\pm V_s$ and $\pm \frac{V_s}{2}$.	Line voltage is quasi-square wave with $\pm V_s$.
3.	These devices are underutilized.	These devices are better utilized.

5.12. Give the reason why thyristors are not preferred for inverters ?

Ans. Thyristor is not preferable because thyristor must be turned-OFF by forced commutation. Inverters use PWM technique also. Then switches need to be turn ON and OFF at high frequencies. Thyristor cannot be switched at such high PWM frequencies.

☺☺☺

Scanned by TapScanner