Wideband RELAX and wideband CLEAN for aeroacoustic imaging

Yanwei Wang and Jian Li[a)]
Department of Electrical and Computer Engineering, University of Florida, Gainesville, Florida 32611

Petre Stoica
Department of Systems and Control, Uppsala University, P.O. Box 337, SE-75105 Uppsala, Sweden

Mark Sheplak
Department of Mechanical and Aerospace Engineering, University of Florida, Gainesville, Florida 32611

Toshikazu Nishida
Department of Electrical and Computer Engineering, P.O. Box 116200, University of Florida, Gainesville, Florida 32611

(Received 18 April 2003; revised 3 November 2003; accepted 17 November 2003)

Microphone arrays can be used for acoustic source localization and characterization in wind tunnel testing. In this paper, the wideband RELAX (WB-RELAX) and the wideband CLEAN (WB-CLEAN) algorithms are presented for aeroacoustic imaging using an acoustic array. WB-RELAX is a parametric approach that can be used efficiently for point source imaging without the sidelobe problems suffered by the delay-and-sum beamforming approaches. WB-CLEAN does not have sidelobe problems either, but it behaves more like a nonparametric approach and can be used for both point source and distributed source imaging. Moreover, neither of the algorithms suffers from the severe performance degradations encountered by the adaptive beamforming methods when the number of snapshots is small and/or the sources are highly correlated or coherent with each other. A two-step optimization procedure is used to implement the WB-RELAX and WB-CLEAN algorithms efficiently. The performance of WB-RELAX and WB-CLEAN is demonstrated by applying them to measured data obtained at the NASA Langley Quiet Flow Facility using a small aperture directional array (SADA). Somewhat surprisingly, using these approaches, not only were the parameters of the dominant source accurately determined, but a highly correlated multipath of the dominant source was also discovered. © *2004 Acoustical Society of America.*
[DOI: 10.1121/1.1639906]

PACS numbers: 43.60.Fg, 43.60.Jn, 43.60.Lq [EJS] Pages: 757–767

05 September 2023 05:37:08

I. INTRODUCTION

As aircraft noise regulations become more stringent, manufacturers seek methods to reduce the noise generated by an aircraft. With the development of quieter engines, the noise generated by the airframe becomes more significant, particularly during the approaching and landing phases of a flight (Bent *et al.*, 1996). To design quieter aircraft, the physical mechanisms of noise generation must be understood. Localizing a noise source and analyzing the spatial and temporal characteristics of its radiation can provide insight into the noise generation mechanisms and aid in constructing theoretical or computational noise generation models (Arnold, 2001).

Microphone array processing methods have been developed for the purpose of obtaining accurate spatial and temporal information about acoustic sources (Humphreys *et al.*, 1998; Piet and Elias, 1997). Different aspects of array processing have been discussed in the literature, including, for example, array topology (Piet and Elias, 1997), array calibration (Mosher *et al.*, 1997), array beamforming algorithms (Dougherty and Stoker, 1998; Gramann and Mocio, 1993), data processing and visualization systems (Watts *et al.*, 1996; Mosher *et al.*, 1999), and array testing (Humphreys *et al.*, 1998; Brooks and Humphreys, 1999; Mosher, 1996; Piet *et al.*, 1999; Meadows *et al.*, 1997; Storms *et al.*, 1999).

To form high-quality acoustic images using microphone arrays, both delay-and-sum (Humphreys *et al.*, 1998) and adaptive (Dougherty and Stoker, 1998; Gramann and Mocio, 1993) beamforming methods have been considered. Besides the high sidelobes, one inherent problem of the delay-and-sum beamforming method for wideband signals is the varying mainlobe width as a function of frequency when a wideband signal is divided into many narrow-band frequency bins via the Fourier transform. One approach to mitigate this problem is to use a special shading or weighting algorithm with the delay-and-sum method (Brooks *et al.*, 1987).

The adaptive algorithms (Dougherty and Stoker, 1998; Gramann and Mocio, 1993) have much better resolution and much better interference suppression capability than the delay-and-sum approaches. However, they also suffer from the varying mainlobe width problem as the frequency changes. Moreover, they exhibit severe performance degra-

[a)]Author to whom correspondence should be addressed. Current address: Department of Electrical and Computer Engineering, P.O. Box 116130, University of Florida, Gainesville, FL 32611. Electronic mail: li@dsp.ufl.edu

dations when the number of snapshots is small and the sources are highly correlated or coherent (Van Trees, 2002).

In this paper, we present two closely related algorithms, namely wideband RELAX (WB-RELAX) and wideband CLEAN (WB-CLEAN), for aeroacoustic imaging using a near-field acoustic array. The former is a parametric approach that can be used efficiently for point source imaging without the sidelobe problems suffered by the delay-and-sum type of approaches. The latter does not have sidelobe problems either but behaves more like a nonparametric approach and it can be used for both point source and distributed source imaging. Moreover, neither algorithm suffers from the severe performance degradations encountered by the adaptive beamforming methods described above. Furthermore, WB-RELAX and WB-CLEAN eliminate the varying mainlobe width problem suffered by the delay-and-sum approaches. A two-step optimization procedure is used to implement the WB-RELAX and WB-CLEAN algorithms efficiently. The performance of WB-RELAX and WB-CLEAN is demonstrated by applying them to measured data obtained at the NASA Langley Quiet Flow Facility using a small aperture directional array (SADA) (Humphreys *et al.*, 1998; Brooks and Humphreys, 1999). Somewhat surprisingly, using these algorithms, we have not only been able to accurately determine the parameters of the dominant source, but also discovered a highly correlated multipath of the dominant source. The correlation between the dominant source and its multipath is analyzed and a conjecture on the possible cause of the multipath is provided. Three-dimensional (3-D) images of the acoustic sources are also constructed using WB-RELAX and WB-CLEAN with the NASA measured data.

The remainder of this paper is organized as follows. In Sec. II, we describe the wideband signal model and formulate the aeroacoustic imaging problem as a signal parameter estimation problem. In Secs. III and IV, we present the WB-RELAX and WB-CLEAN algorithms, respectively. Implementation issues and experimental results are discussed in Sec. V. Finally, we conclude the paper in Sec. VI.

II. PROBLEM FORMULATION

Consider an M-element microphone array receiving the wavefield generated by K near-field wideband sources in the presence of additive noise. For each microphone output, the time-domain sampled data sequence is divided into I nonoverlapping segments with each segment containing L samples. The L-point discrete Fourier transform (DFT) is applied to each segment to transform the wideband data into L narrow-band frequency bins. [Note that a sufficiently large L should be chosen so that the narrow-band assumption (Zatman, 1998) is valid.] According to the frequency-domain snapshot model (Van Trees, 2002), the $M\times 1$ noisy array output vector $\mathbf{y}_i(\omega_l)$ at the lth frequency bin of the ith segment can be written as

$$\mathbf{y}_i(\omega_l)=\mathbf{A}(\mathbf{p},\omega_l)\mathbf{s}_i(\omega_l)+\mathbf{e}_i(\omega_l),\quad l=1,\ldots,L,\quad i=1,\ldots,I, \tag{1}$$

where $\mathbf{s}_i(\omega_l)$ is the $K\times 1$ signal vector $\mathbf{s}_i(\omega_l)=[s_{i,1}(\omega_l)\, s_{i,2}(\omega_l)\cdots s_{i,K}(\omega_l)]^T$, $\mathbf{e}_i(\omega_l)$ is the $M\times 1$ noise vector, and the $M\times K$ steering matrix is $\mathbf{A}(\mathbf{p},\omega_l)\triangleq[\mathbf{a}(p_1,\omega_l)\,\mathbf{a}(p_2,\omega_l)\cdots\mathbf{a}(p_K,\omega_l)]$ with $\mathbf{p}\triangleq[p_1,p_2,\ldots,p_K]^T$ being the vector of the 3-D locations p_k, $k=1,\ldots,K$, of the incident signals. The $M\times 1$ kth steering vector $\mathbf{a}(p_k,\omega_l)$ has the following form:

$$\mathbf{a}(p_k,\omega_l)=\begin{bmatrix}\frac{1}{r_{1,k}}e^{-j\omega_l r_{1,k}/c_0}\\ \vdots\\ \frac{1}{r_{m,k}}e^{-j\omega_l r_{m,k}/c_0}\\ \vdots\\ \frac{1}{r_{M,k}}e^{-j\omega_l r_{M,k}/c_0}\end{bmatrix}, \tag{2}$$

where $r_{m,k}$ is the distance between the mth microphone and the kth source, and c_0 is the (known) sound propagation velocity.

In our formulation, the noise vector $\mathbf{e}_i(\omega_l)$, $l=1,\ldots,L$, is assumed to be a zero-mean spatially correlated but "temporally" (versus look i and sample l) white random process. The signal waveform vector $\mathbf{s}_i(\omega_l)$ is modeled as a deterministic unknown. The problem of interest herein is to estimate $\mathbf{s}_i(\omega_l)$ and $\mathbf{p}$ from the measured data $\mathbf{y}_i(\omega_l)$, $l=1,\ldots,L$, $i=1,\ldots,I$. For the methods studied here, we can choose $I=1$, but for adaptive beamforming, $I>M$ is required in general. Once we have estimated the parameters of the incident sources, the corresponding 3-D acoustic image can be constructed based on these results.

III. WIDEBAND RELAX

The RELAX algorithm was first proposed by Li and Stoica (1996) for mixed spectrum estimation. Later, it was extended by Li *et al.* (1997) to angle-of-arrival and waveform estimation of wideband plane waves arriving at a uniform linear array (ULA) under the spatially correlated noise assumption. In this section, we present the wideband RELAX (WB-RELAX) algorithm as a parameter estimation approach to estimate the locations and the waveforms of near-field wideband sources using an arbitrary acoustic array.

We consider the wideband signal parameter estimation problem formulated in Sec. II. WB-RELAX estimates the signal parameters $\{\mathbf{p},\mathbf{s}_i(\omega_l)\}$ in the data model given in Eq. (1) by minimizing the following nonlinear least-squares criterion:

$$G_r=\sum_{i=1}^{I}\sum_{l=1}^{L}[\mathbf{y}_i(\omega_l)-\mathbf{A}(\mathbf{p},\omega_l)\mathbf{s}_i(\omega_l)]^H\times[\mathbf{y}_i(\omega_l)-\mathbf{A}(\mathbf{p},\omega_l)\mathbf{s}_i(\omega_l)], \tag{3}$$

where the subscript "r" stands for RELAX and $(\cdot)^H$ denotes the conjugate transpose. If the noise vector $\mathbf{e}_i(\omega_l)$ were both spatially and temporally white and Gaussian, minimizing Eq. (3) would yield the maximum likelihood estimates of the source locations and the corresponding source waveforms. Even when the noise vector $\mathbf{e}_i(\omega_l)$ is spatially colored, as assumed here, it has been shown by Stoica and Nehorai

05 September 2023 05:37:08

(1989) and Stoica *et al.* (1997) that the estimates of $\{\mathbf{p},\mathbf{s}_i(\omega_l)\}$ obtained by minimizing Eq. (3) are still asymptotically (for $M \gg 1$) statistically efficient under mild conditions. That is, these estimates asymptotically achieve the Cramér–Rao bound (CRB), which is the best performance bound for an unbiased estimator, in spite of the fact that $\mathbf{e}_i(\omega_l)$ is not spatially white.

To minimize G_r, consider first minimizing with respect to $\mathbf{s}_i(\omega_l)$ for a fixed $\mathbf{p}$. This yields the well-known solution

$$\hat{\mathbf{s}}_i(\omega_l)=(\mathbf{A}^H(\mathbf{p},\omega_l)\mathbf{A}(\mathbf{p},\omega_l))^{-1}\mathbf{A}^H(\mathbf{p},\omega_l)\mathbf{y}_i(\omega_l),\quad i=1,\ldots,I,\quad l=1,\ldots,L. \tag{4}$$

Substituting Eq. (4) into Eq. (3) gives the following minimization problem:

$$\hat{\mathbf{p}}=\arg\min_{\mathbf{p}}\sum_{i=1}^{I}\sum_{l=1}^{L}\|[\mathbf{I}-\mathbf{A}(\mathbf{p},\omega_l)\times(\mathbf{A}^H(\mathbf{p},\omega_l)\mathbf{A}(\mathbf{p},\omega_l))^{-1}\mathbf{A}^H(\mathbf{p},\omega_l)]\mathbf{y}_i(\omega_l)\|^2, \tag{5}$$

where $\|\cdot\|$ denotes the Euclidean norm. The minimization of Eq. (5) is a highly nonlinear $3K$-dimensional optimization problem, which we will try to avoid. The WB-RELAX algorithm does not concentrate out $\hat{\mathbf{s}}_i(\omega_l)$ but rather decouples the $3K$-dimensional optimization problem in Eq. (3) into a sequence of 3-D optimization problems in a conceptually and computationally simple way.

Before presenting our WB-RELAX algorithm, we first provide the following preparations. Assume that there are $\bar{K}$ incident signals and we have estimated the parameters $\hat{p}_j$, $\hat{s}_{i,j}(\omega_l)$ of all but the kth signal. Let

$$\mathbf{y}_{k,i}(\omega_l)\triangleq\mathbf{y}_i(\omega_l)-\sum_{j=1,j\neq k}^{\bar{K}}\mathbf{a}(\hat{p}_j,\omega_l)\hat{s}_{i,j}(\omega_l),\quad i=1,\ldots,I,\quad l=1,\ldots,L. \tag{6}$$

Then the least-squares cost function for the kth signal is given by

$$G_k=\sum_{i=1}^{I}\sum_{l=1}^{L}[\mathbf{y}_{k,i}(\omega_l)-\mathbf{a}(p_k,\omega_l)s_{i,k}(\omega_l)]^H\times[\mathbf{y}_{k,i}(\omega_l)-\mathbf{a}(p_k,\omega_l)s_{i,k}(\omega_l)]. \tag{7}$$

Minimizing G_k with respect to $s_{i,k}(\omega_l)$ and p_k, we have

$$\hat{s}_{i,k}(\omega_l)=\left.\frac{\mathbf{a}^H(p_k,\omega_l)\mathbf{y}_{k,i}(\omega_l)}{\mathbf{a}^H(p_k,\omega_l)\mathbf{a}(p_k,\omega_l)}\right|_{p_k=\hat{p}_k} \tag{8}$$

and

$$\hat{p}_k=\arg\min_{p_k}\sum_{i=1}^{I}\sum_{l=1}^{L}\left\|\left[\mathbf{I}-\frac{\mathbf{a}(p_k,\omega_l)\mathbf{a}^H(p_k,\omega_l)}{\mathbf{a}^H(p_k,\omega_l)\mathbf{a}(p_k,\omega_l)}\right]\mathbf{y}_{k,i}(\omega_l)\right\|^2 \tag{9}$$

$$=\arg\max_{p_k}\sum_{i=1}^{I}\sum_{l=1}^{L}\frac{|\mathbf{a}^H(p_k,\omega_l)\mathbf{y}_{k,i}(\omega_l)|^2}{\|\mathbf{a}(p_k,\omega_l)\|^2}. \tag{10}$$

We note from Eq. (10) that $\hat{p}_k$ is the location of the dominant peak of the sum over (i,l) of the normalized delay-and-sum beamformers $|\mathbf{a}^H(p_k,\omega_l)\mathbf{y}_{k,i}(\omega_l)|^2/\|\mathbf{a}(p_k,\omega_l)\|^2$. Equation (10) is also recognized as a matched filtering of the received wavefield, $\mathbf{a}(p_k,\omega_l)s_{i,k}(\omega_l)$, under the assumption that $\mathbf{y}_{k,i}(\omega_l)$ contains only the kth signal and additive noise. Now we are ready to present the WB-RELAX algorithm.

Step 1: Assume $\bar{K}=1$. Obtain $\{\hat{p}_k,\hat{s}_{i,k}(\omega_l)\}_{k=1}$ by using Eqs. (10) and (8) with $\mathbf{y}_{1,i}(\omega_l)=\mathbf{y}_i(\omega_l)$.

Step 2: Assume $\bar{K}=2$. Compute $\mathbf{y}_{2,i}(\omega_l)$ with Eq. (6) by using $\{\hat{p}_k,\hat{s}_{i,k}(\omega_l)\}_{k=1}$ obtained in **Step 1**. Obtain $\{\hat{p}_k,\hat{s}_{i,k}(\omega_l)\}_{k=2}$ from $\mathbf{y}_{2,i}(\omega_l)$. Next, compute $\mathbf{y}_{1,i}(\omega_l)$ by using $\{\hat{p}_k,\hat{s}_{i,k}(\omega_l)\}_{k=2}$ and then redetermine $\{\hat{p}_k,\hat{s}_{i,k}(\omega_l)\}_{k=1}$ from $\mathbf{y}_{1,i}(\omega_l)$. Iterate the previous two substeps until practical convergence is achieved (to be discussed later on).

Step 3: Assume $\bar{K}=3$. Compute $\mathbf{y}_{3,i}(\omega_l)$ by using $\{\hat{p}_k,\hat{s}_{i,k}(\omega_l)\}_{k=1,2}$ obtained in **Step 2**. Obtain $\{\hat{p}_k,\hat{s}_{i,k}(\omega_l)\}_{k=3}$ from $\mathbf{y}_{3,i}(\omega_l)$. Next, compute $\mathbf{y}_{1,i}(\omega_l)$ by using $\{\hat{p}_k,\hat{s}_{i,k}(\omega_l)\}_{k=2,3}$, and redetermine $\{\hat{p}_k,\hat{s}_{i,k}(\omega_l)\}_{k=1}$ from $\mathbf{y}_{1,i}(\omega_l)$. Then, compute $\mathbf{y}_{2,i}(\omega_l)$ by using $\{\hat{p}_k,\hat{s}_{i,k}(\omega_l)\}_{k=1,3}$ and redetermine $\{\hat{p}_k,\hat{s}_{i,k}(\omega_l)\}_{k=2}$ from $\mathbf{y}_{2,i}(\omega_l)$. Iterate these substeps until practical convergence.

Remaining Steps: Continue similarly until $\bar{K}$ is equal to K, which is assumed known or empirically determined.

When the sources are not spaced very closely, i.e., not less than half of the delay-and-sum beamformer's resolution limit, WB-RELAX usually converges in a few steps (Li and Stoica, 1996). Otherwise, WB-RELAX may converge slowly. The "practical convergence" of the WB-RELAX algorithm may be determined by checking the relative change, say lower than $\epsilon=10^{-3}$, of the cost function G_r in Eq. (3) between two consecutive iterations.

The kth wideband signal waveform estimate can be calculated from the L-point inverse discrete Fourier transform (IDFT) of $\{\hat{s}_{i,k}(\omega_l)\}_{l=1}^{L}$. Also we estimate the signal power using the following equation:

$$\hat{P}_k=\frac{1}{I}\sum_{i=1}^{I}\sum_{l=1}^{L}|\hat{s}_{i,k}(\omega_l)|^2. \tag{11}$$

Based on the descriptions above, the WB-RELAX algorithm can be summarized as follows:

WB-RELAX Algorithm

Let $\bar{K}=1$, $\mathbf{y}_{1,i}(\omega_l)=\mathbf{y}_i(\omega_l)$, for $l=1,\ldots,L$, and $i=1,\ldots,I$

$\hat{p}_1=\arg\max_{p_1}\Sigma_{i=1}^{I}\Sigma_{l=1}^{L}|\mathbf{a}^H(p_1,\omega_l)\mathbf{y}_{1,i}(\omega_l)|^2/\|\mathbf{a}(p_1,\omega_l)\|^2$

$\hat{s}_{i,1}(\omega_l)=\mathbf{a}^H(\hat{p}_1,\omega_l)\mathbf{y}_{1,i}(\omega_l)/\|\mathbf{a}(\hat{p}_1,\omega_l)\|^2$ for $l=1,\ldots,L$, and $i=1,\ldots,I$

for $\bar{K}=2$ to K **do**

  repeat

    for $k=\bar{K},1,2,3,\ldots,\bar{K}-1$ **do**

$\mathbf{y}_{k,i}(\omega_l)=\mathbf{y}_i(\omega_l)-\Sigma_{j=1,j\neq k}^{\bar{K}}\mathbf{a}(\hat{p}_j,\omega_l)\hat{s}_{i,j}(\omega_l)$ for $l=1,\ldots,L$, and $i=1,\ldots,I$

$\hat{p}_k=\arg\max_{p_k}\Sigma_{i=1}^{I}\Sigma_{l=1}^{L}|\mathbf{a}^H(p_k,\omega_l)\mathbf{y}_{k,i}(\omega_l)|^2/\|\mathbf{a}(p_k,\omega_l)\|^2$

$\hat{s}_{i,k}(\omega_l)=\mathbf{a}^H(\hat{p}_k,\omega_l)\mathbf{y}_{k,i}(\omega_l)/\|\mathbf{a}(\hat{p}_k,\omega_l)\|^2$ for $l=1,\ldots,L$, and $i=1,\ldots,I$

    end for

  until practical convergence achieved

end for

05 September 2023 05:37:08

IV. WIDEBAND CLEAN

The CLEAN algorithm was first proposed in radio astronomy (Högbom, 1974) for gapped data (or irregularly sampled data) analysis. In the original CLEAN algorithm (Högbom, 1974), it was assumed that the target space can be represented by a small number of point sources in an otherwise empty field of view. Later, CLEAN was applied to the case of distributed sources with a small loop gain parameter. From the aperture synthesis theory, we know that the synthesis map obtained via the delay-and-sum beamformer is proportional to the convolution of the true source intensity distribution with the synthesized beam. Because of the finite number of samples, the data gaps, and the irregularity of the data sampling process, the synthesized beam (the so-called "dirty beam" (Högbom, 1974)) will comprise an extended pattern of undesirable sidelobes. As a consequence, the synthesis map convolving the source intensity distribution with the synthesized beam will be disturbed by the sidelobes from the synthesis beam, and the result is called the "dirty map" (Högbom, 1974). The CLEAN algorithm attempts to deconvolve the synthesized map into the true source intensity distribution and the "dirty beam" using an iterative method.

In this section, we extend the CLEAN algorithm to the wideband signal and multisnapshot case. At the nth iteration, to estimate the most significant signal impinging on the microphone array, we consider the following least-squares criterion:

$$G_c=\sum_{i=1}^{I}\sum_{l=1}^{L}[\mathbf{y}_{i,n}(\omega_l)-\mathbf{a}(p_n,\omega_l)s_{i,n}(\omega_l)]^H \times[\mathbf{y}_{i,n}(\omega_l)-\mathbf{a}(p_n,\omega_l)s_{i,n}(\omega_l)], \tag{12}$$

where the subscript "c" stands for CLEAN and

$$\mathbf{y}_{i,n}(\omega_l)=\mathbf{y}_i(\omega_l)-\sum_{\tilde{n}=1}^{n-1}\rho\cdot\mathbf{a}(\hat{p}_{\tilde{n}},\omega_l)\hat{s}_{i,\tilde{n}}(\omega_l), \tag{13}$$

with $\hat{p}_{\tilde{n}}$ and $\hat{s}_{i,\tilde{n}}(\omega_l)$, $\tilde{n}=1,2,...,n-1$, being obtained from the previous iterations and ρ being the loop gain usually between 0.1 and 0.25. By minimizing the above least-squares cost function with respect to $s_{i,n}(\omega_l)$ and p_n, we have

$$\hat{s}_{i,n}(\omega_l)=\left.\frac{\mathbf{a}^H(p_n,\omega_l)\mathbf{y}_{i,n}(\omega_l)}{\mathbf{a}^H(p_n,\omega_l)\mathbf{a}(p_n,\omega_l)}\right|_{p_n=\hat{p}_n} \tag{14}$$

and

$$\hat{p}_n=\arg\min_{p_n}\sum_{i=1}^{I}\sum_{l=1}^{L}\left\|\left[\mathbf{I}-\frac{\mathbf{a}(p_n,\omega_l)\mathbf{a}^H(p_n,\omega_l)}{\mathbf{a}^H(p_n,\omega_l)\mathbf{a}(p_n,\omega_l)}\right]\mathbf{y}_{i,n}(\omega_l)\right\|^2 \tag{15}$$

$$=\arg\max_{p_n}\sum_{i=1}^{I}\sum_{l=1}^{L}\frac{|\mathbf{a}^H(p_n,\omega_l)\mathbf{y}_{i,n}(\omega_l)|^2}{\|\mathbf{a}(p_n,\omega_l)\|^2}. \tag{16}$$

Note from Eqs. (16) and (14) that the above estimates of the source location and the signal waveform are similar to Eqs. (10) and (8) of WB-RELAX, respectively.

The WB-CLEAN algorithm can now be described as follows.

Step 1: Choose ρ, initialize with $n=1$ and let $\mathbf{y}_{i,1}(\omega_l)=\mathbf{y}_i(\omega_l)$.

Step 2: Estimate p_n and $s_{i,n}(\omega_l)$ by using Eqs. (16) and (14), for $l=1,2,...,L$, $i=1,...,I$.

Step 3: Calculate the array received wavefield generated by the source estimated in the last step. Subtract out only a fraction ρ (e.g., $\rho=0.1$) of the estimated wavefield from $\mathbf{y}_{i,n}(\omega_l)$ to get $\mathbf{y}_{i,n+1}(\omega_l)$.

Step 4: Add the current estimated signal location and waveform (scaled by ρ) to a list of estimated signals.

Step 5: Increase the iteration index n by 1.

Remaining Steps: Repeat Steps 2–5 until the process works down to the noise level.

We terminate our iterations by calculating the power distribution $D_P^n(p)$, where

$$D_P^n(p)=\sum_{i=1}^{I}\sum_{l=1}^{L}\frac{|\mathbf{a}^H(p,\omega_l)\mathbf{y}_{i,n}(\omega_l)|^2}{\|\mathbf{a}(p,\omega_l)\|^2}, \tag{17}$$

and its entropy $H(D_P^n(p))$, where

$$H(X)=-\sum_{x\in\chi}f(x)\log f(x) \tag{18}$$

and $f(x)$ is the probability mass function (pmf) of X.

In our examples in Sec. V, we terminate the iterations, based on our empirical experience, when the entropy is around 4.35.

We also note that the CLEAN algorithm subtracts out a small fraction ρ of the "dirty beam" from the "dirty map" at each iteration. Another form of the CLEAN algorithm, proposed by Dougherty and Stoker (1998), is based on covariance fitting, but it cannot deal with correlated signals or small snapshot numbers.

Based on the descriptions above, the WB-CLEAN algorithm can be summarized as follows:

WB-CLEAN Algorithm

Select the loop gain ρ

Let $n=1$, $\mathbf{y}_{i,n}(\omega_l)=\mathbf{y}_i(\omega_l)$, for $l=1,...,L$, and $i=1,...,I$

repeat

$\hat{p}_n=\arg\max_{p_n}\Sigma_{i=1}^{I}\Sigma_{l=1}^{L}|\mathbf{a}^H(p_n,\omega_l)\mathbf{y}_{i,n}(\omega_l)|^2/\|\mathbf{a}(p_n,\omega_l)\|^2$

$\hat{s}_{i,n}(\omega_l)=\mathbf{a}^H(\hat{p}_n,\omega_l)\mathbf{y}_{i,n}(\omega_l)/\|\mathbf{a}(\hat{p}_n,\omega_l)\|^2$ for $l=1,...,L$, and $i=1,...,I$

$\mathbf{y}_{i,n+1}(\omega_l)=\mathbf{y}_{i,n}(\omega_l)-\rho\cdot\mathbf{a}(\hat{p}_n,\omega_l)\hat{s}_{i,n}(\omega_l)$ for $l=1,...,L$, and $i=1,...,I$

$n=n+1$

until no significant signal is left in $\mathbf{y}_{i,n}$

$N=n-1$

Finally, reconstruct the source distribution using $\hat{p}_n$ and $\rho\hat{s}_{i,n}(\omega_l)$ for $n=1,...,N$

Note that the WB-CLEAN results $\{\hat{p}_n,\rho\hat{s}_{i,n}(\omega_l)\}_{n=1}^{N}$ can usually be divided into K groups of sources $\{g_k\}_{k=1}^{K}$ where each group stands for a distributed source. The signal power of the kth distributed source can be calculated using the following equation:

$$\hat{P}_k=\frac{1}{I}\sum_{i=1}^{I}\sum_{l=1}^{L}\sum_{n\in g_k}|\rho\hat{s}_{i,n}(\omega_l)|^2. \tag{19}$$

05 September 2023 05:37:08

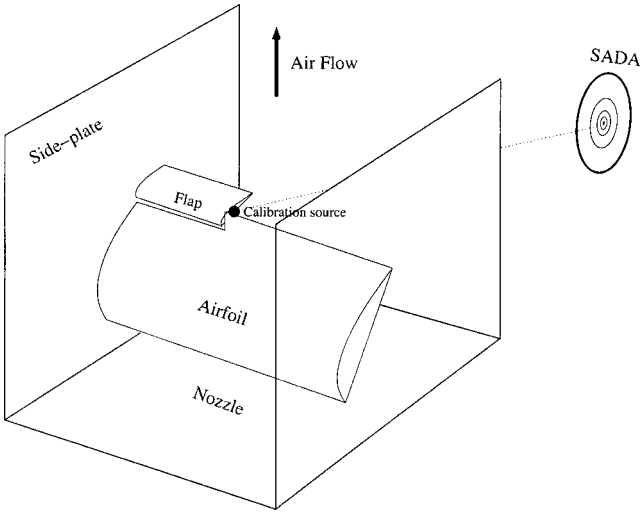

FIG. 1. Test setup for the NASA data (Humphreys *et al.*, 1998; Brooks and Humphreys, 1999).

V. EXPERIMENTAL RESULTS

To assess the algorithm performance, we have applied WB-RELAX and WB-CLEAN to the data collected in the NASA Langley Quiet Flow Facility (QFF) using a small aperture directional array (SADA) (Humphreys *et al.*, 1998; Brooks and Humphreys, 1999). The test setup is illustrated in Fig. 1. SADA is a 2-D array which has 33 microphones with a maximum diagonal aperture size of 7.76 in. The array pattern incorporates four irregular circles of eight microphones each and one microphone is placed at the array center (Brooks and Humphreys, 1999). Each circle is twice the diameter of the circle it encloses. QFF is a quiet open-jet facility designed for anechoic acoustic testing. A two-by-three feet rectangular open-jet nozzle was placed at the bottom of the QFF. A three feet span model was mounted in the QFF. The noise source configurations studied are flap edges (Brooks and Humphreys, 1999), with a calibration source placed next to the flap. The SADA was mounted on a pivotal boom designed to allow it to face the center of the flap edge of the main element airfoil (also the position of the calibration source) while maintaining a constant distance (60 in.) away from it. The test was conducted with one point source (the calibration source) but without air flow. For detailed information on the testing environment and procedure, we refer the reader to (Humphreys *et al.*, 1998; Brooks and Humphreys, 1999). The current study is limited to the no-flow case, consisting of well-defined, compact sources radiating in a homogeneous medium. An extention to trailing edge noise source studies in an open jet wind tunnel would require modification of the steering vectors to account for shear layer diffraction effects (Humphreys *et al.*, 1998).

Before applying the data, we first discuss some implementation issues of the algorithms.

A. Implementation of WB-RELAX

The most challenging part of implementing WB-RELAX (as well as WB-CLEAN, see below) is the estimation of the source location p_k, $k=1,...,K$, in Eq. (10). This maximization problem is nonconvex, and an exhaustive search method has to be used to achieve the global maximum. However, a full 3-D search is computationally intensive. In this paper, we propose a two-step search procedure which can reduce the computational complexity significantly.

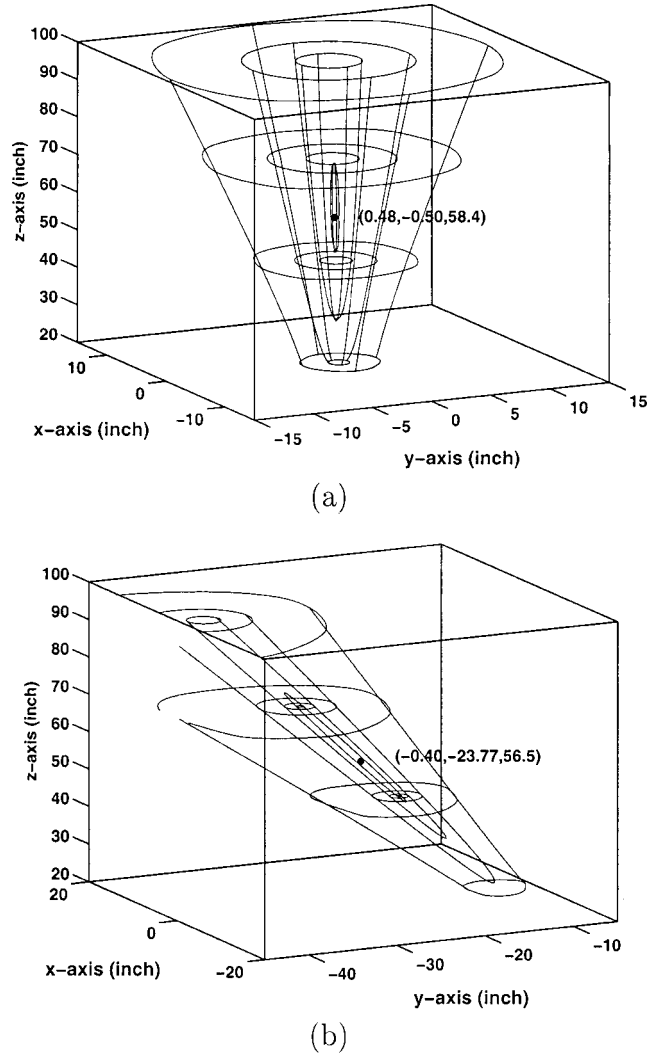

FIG. 2. Location estimation via WB-RELAX: (a) 3-D localization of the first point source; (b) 3-D localization of the second point source.

Step 1 Coarse Search: Evaluate the objective function in Eq. (10) at each point in a predefined 3-D coarse grid (i.e., 2-in. spacing for all three dimensions) within the space of interest for the NASA data. Find the position corresponding to the maximum value (coarse search result).

Step 2 Fine Search: Using the coarse search result as an initial point, perform a fine search in the vicinity of this initial point to accurately locate the location of the global maximum of Eq. (10). This can be implemented by using a derivative-free multidimensional uphill search method such as the Nelder-Mead algorithm (Nelder and Mead, 1965; Rosenbrock, 1960; Powell, 1964).

In this two-step search procedure, **Step 1** can give us the approximate position of the global maximum under the mild condition that the coarse grid is fine enough. **Step 2** can be implemented by using the "fminsearch" command in the Matlab optimization toolbox.

05 September 2023 05:37:08

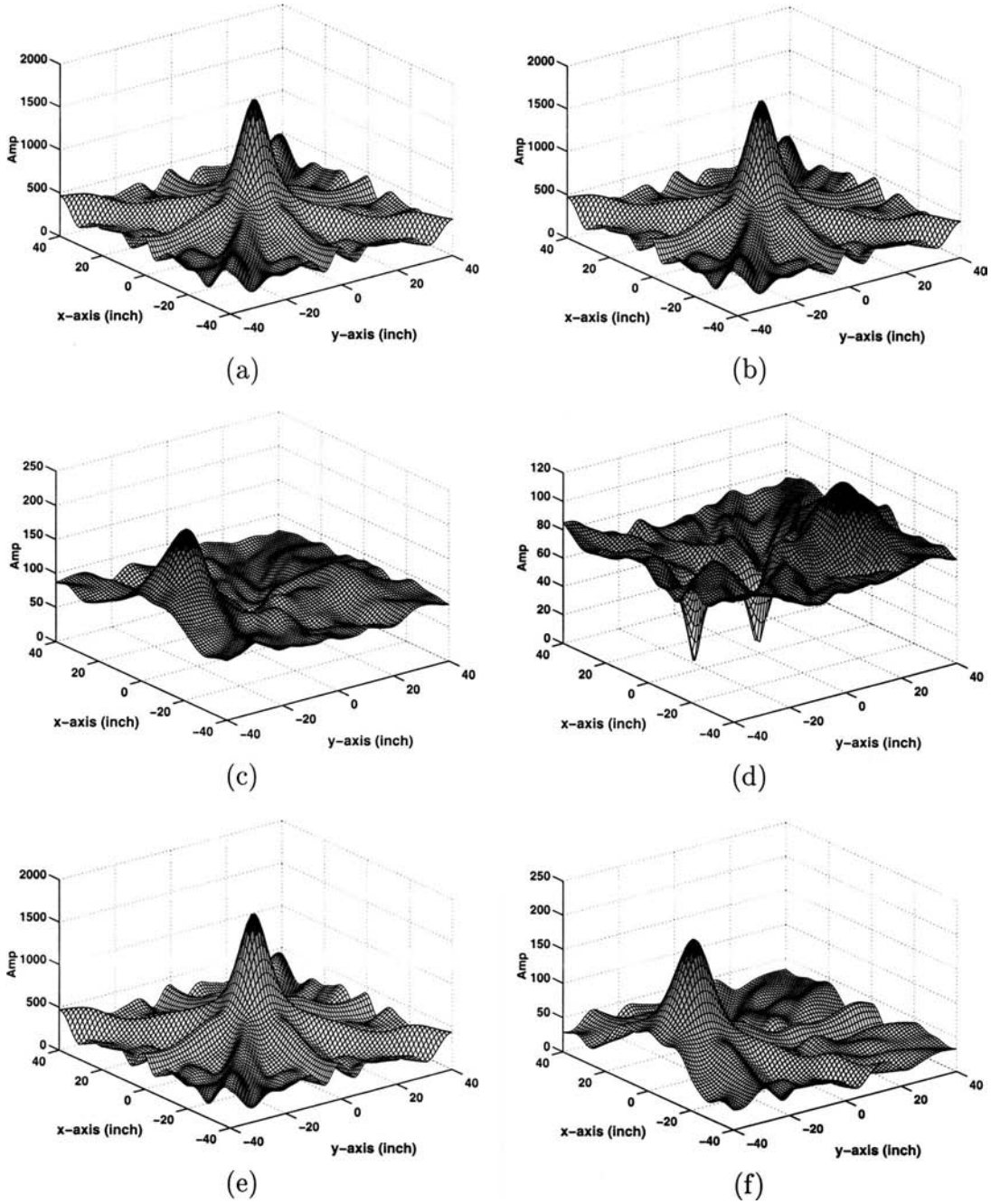

FIG. 3. Detailed results of WB-RELAX: (a) Magnitude distribution at $z=58.4$ in.. (b) Magnitude distribution at $x=58.4$ in. after subtracting out the second source. (c) Magnitude distribution at $z=56.5$ in. after subtracting out the first source. (d) Magnitude distribution of the residue data at $x=56.5$ in. after subtracting out the first and the second sources. (e) Magnitude distribution at $z=58.4$ in. for the first source only. (f) Magnitude distribution at $z=56.5$ in. for the second source only.

B. Implementation of WB-CLEAN

The implementation issues of WB-CLEAN are similar to those of WB-RELAX. For each iteration, we use the same two-step procedure to search for the location of the strongest source and estimate the corresponding signal waveform. For WB-CLEAN, the loop gain ρ is preselected. The number of iterations N may be chosen experimentally based on certain criteria such as when the estimated peak height of the current power distribution in Eq. (17) is down to the noise level. To minimize the number of iterations required by WB-CLEAN, ρ should be unity; then WB-CLEAN becomes a noniterative version of WB-RELAX. However, for distributed sources, we choose ρ to be within the interval [0.1,0.25]. Note that a small ρ (<0.1) makes the CLEAN algorithm converge very slowly and a large ρ (>0.25) makes CLEAN not suitable for distributed sources. In our experiments, we chose $\rho=0.1$.

C. Application of WB-RELAX

The test data we used herein is the first data block from test no. 510 collected in the NASA QFF (Humphreys *et al.*, 1998; Brooks and Humphreys, 1999). The sampling rate for each channel is 142.857 kHz, and there are 8192 time do-

05 September 2023 05:37:08

main samples for each microphone. After applying an 8192-point DFT to the measured data, we obtain 8192 frequency bins with a resolution of 17.45 Hz. Because the signal is real-valued, only half of the frequency bins need to be considered due to the conjugate symmetry property of the Fourier transform of a real-valued signal. We utilize all of the frequency bins between 10 and 40 kHz, for a total of 1722 frequency bins. Here we assume that we only have one snapshot for each frequency bin ($I=1$). (The adaptive beamforming methods are not suitable for this case.)

We use the Cartesian coordinate system (x,y,z) in our simulations. The microphone array is located on the xy-plane, and the array center is located at (0,0,0). The space of interest is the volume between -40 and 40 in. for the x- and y-axes, and between 20 and 100 in. for the z-axis. Although only one point source was actually used in the data collection process, we chose $K=2$ sources in our WB-RELAX and discovered a second strongest source besides the dominant calibration source.

The estimated locations of the first and second sources using WB-RELAX are illustrated in Figs. 2(a) and (b), respectively. These two plots also show the 3-D contours of the search function in Eq. (10) evaluated over the space of interest for the two hypothesized sources after WB-RELAX has converged. The estimated source locations are shown by the dots in the middle of the figures, and the location coordinates are also marked correspondingly. The 3-D contour plots clearly show that SADA has a great potential for 2-D location (direction) estimation. At the same time, these two figures indicate that SADA can also be used to estimate the distances of the sources from the array center under the current testing condition, even though a bit less accurately than the estimates of the 2-D location.

Figure 3 shows more detailed results for WB-RELAX. Let

$$D_M(p)=\left[\sum_{i=1}^{I}\sum_{l=1}^{L}\frac{|\mathbf{a}^H(p,\omega_l)\tilde{\mathbf{y}}_i(\omega_l)|^2}{\|\mathbf{a}(p,\omega_l)\|^2}\right]^{1/2} \tag{20}$$

denote the magnitude distribution of the data $\tilde{\mathbf{y}}_i(\omega_l)$, which could be the original data or its processed variations, as a function of the location p. In Fig. 3(a), we show the 2-D slice of the magnitude distribution of the original data parallel to the xy-plane at $z=58.4$ in. (the estimated z-axis location of the first signal source). The dominant calibration source is shown clearly in the figure. In Fig. 3(b), the magnitude distribution at $z=58.4$ in. after coherently subtracting out the second (weaker) source from the original data is shown. In Fig. 3(c), the magnitude distribution after subtracting out the first (stronger) source is shown. Now the 2-D slice is at $z=56.5$ in., which corresponds to the estimated z-coordinate of the second source location. As we can see, after subtracting out the dominant peak in the middle of Fig. 3(a), the second source is clearly shown in Fig. 3(c). In Fig. 3(d), the magnitude distribution of the residue after subtracting out both the first and second sources, at $z=56.5$ in., is shown. It appears that there is a third weak signal left in the residue,

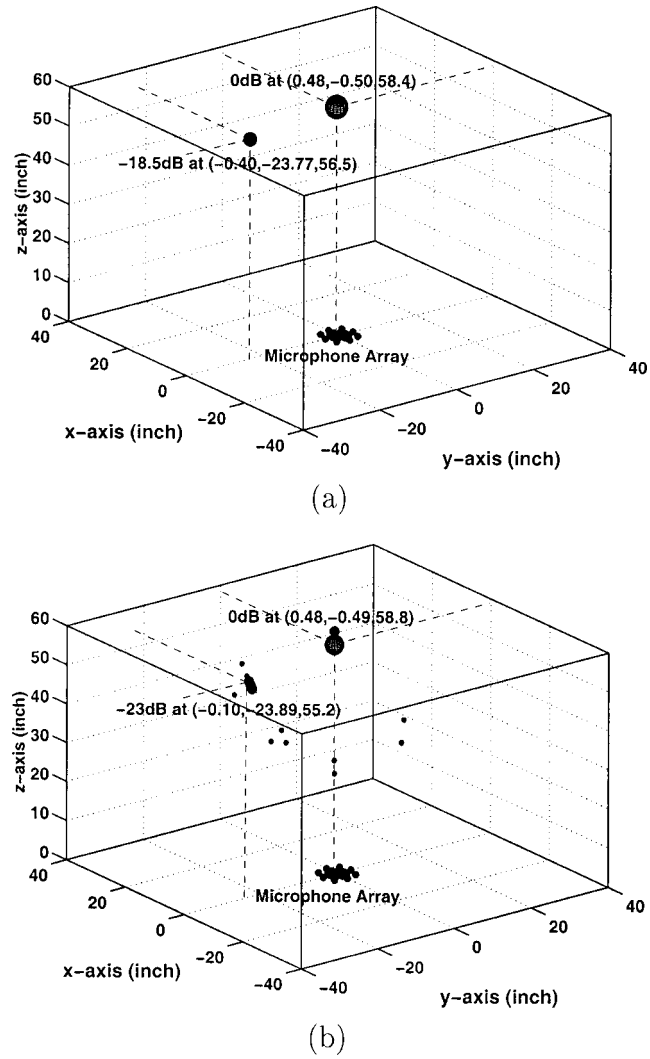

FIG. 4. Estimated locations and powers of the sources: (a) WB-RELAX; (b) WB-CLEAN.

but we did not increase K to 3 since the third signal is quite close to the noise level. The magnitude distributions of the first source only and the second source only, at their estimated z-axis locations, are shown in Figs. 3(e) and (f), respectively, which are free of noise. Note the change of scale in Fig. 3(f). Comparing Fig. 3(e) with the magnitude distribution of the original data shown in Fig. 3(a), it is clear that without WB-RELAX, we could not identify the second source, which is totally buried in the sidelobes of the calibration source. The acoustic image utilizing the results of WB-RELAX is constructed in Fig. 4(a), with the microphone array shown as well. The location coordinates and the relative powers, which are calculated by using Eq. (11), are also marked correspondingly. The estimated signal-to-noise ratio (SNR) is 14 dB.

The above results show that, although SADA is originally designed for 2-D location estimation only, we can estimate the 3-D location of the calibration source accurately using WB-RELAX and obtain the corresponding source power.

To analyze the relationship between the two estimated point sources, we need to evaluate their correlation coeffi-

05 September 2023 05:37:08

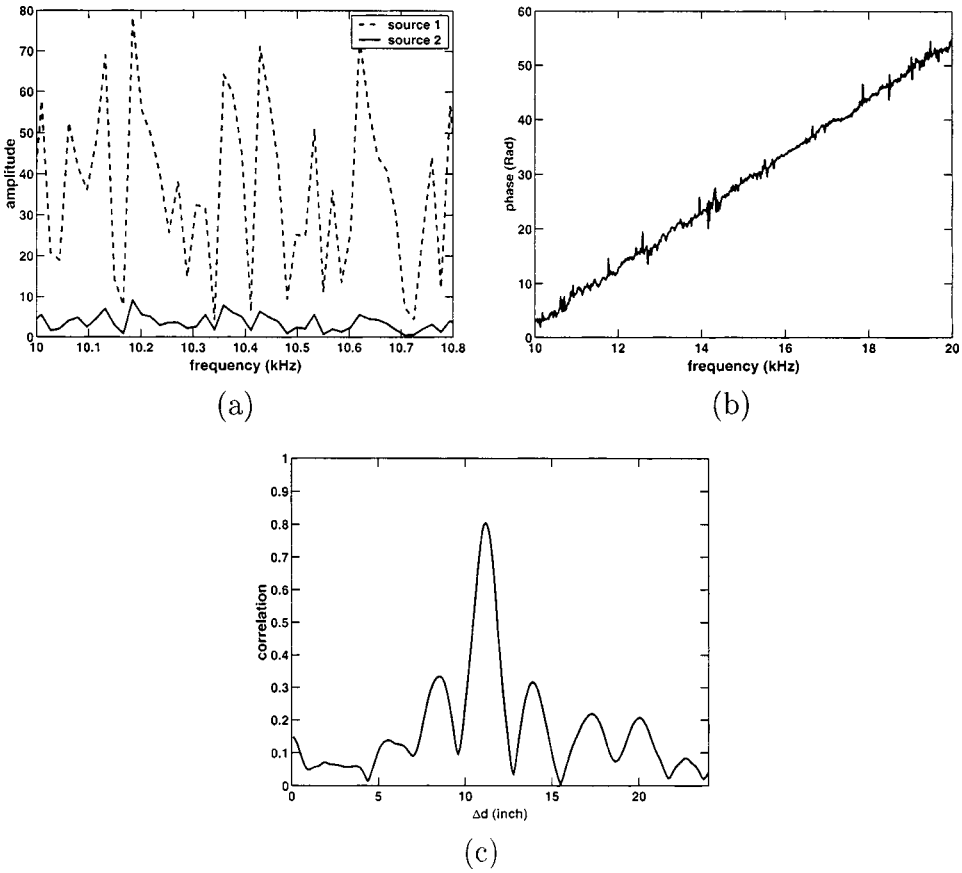

FIG. 5. Correlation between the two estimated sources via WB-RELAX: (a) Amplitude versus frequency curves for the two sources. (b) Phase difference between the two sources. (c) Magnitude of the correlation coefficient versus the propagation distance difference (delay×velocity) between the two sources.

cient. Here, we analyze the correlation for both amplitude and phase. The amplitudes of the two estimated signals over different frequency bins are plotted in Fig. 5(a). To see the relationship clearly, only a small portion of the frequency bins are included in the plot, from 10 to 10.8 kHz. The relationship is similar for other frequency bins. It can be observed that the amplitudes of the two signal waveforms are strongly correlated. The phase difference between the two estimated sources for the frequency bins from 10 to 20 kHz is plotted in Fig. 5(b), which shows clearly that the phase difference changes linearly with the frequency. Combining the results from Figs. 5(a) and (b), we conclude that the second source is a multipath of the first source [i.e., $s_2(t) = \alpha s_1(t-\tau)$, for some constants α and τ]. We calculate the correlation coefficient of the two sources over different frequency bins as a function of the propagation distance difference Δd (time delay $\tau \times$propagation velocity c_0) between the two sources:

TABLE I. The location estimates obtained at various WB-CLEAN iterations (ρ=0.1).

Iteration	1	2	3	4	5	6	7	8	9	10	11
x-coordinate	0.48	0.48	0.48	0.48	0.48	0.48	0.48	0.48	0.48	0.48	0.48
y-coordinate	−0.49	−0.49	−0.49	−0.49	−0.49	−0.49	−0.49	−0.49	−0.49	−0.49	−0.49
z-coordinate	58.6	58.6	58.6	58.6	58.6	58.6	58.6	58.6	58.6	58.6	58.6
Source	1	1	1	1	1	1	1	1	1	1	1
Iteration	12	13	14	15	16	17	18	19	20	21	22
x-coordinate	0.48	0.48	0.48	0.48	0.48	0.48	0.48	0.48	0.48	0.48	0.48
y-coordinate	−0.49	−0.49	−0.49	−0.49	−0.49	−0.49	−0.49	−0.49	−0.49	−0.49	−0.49
z-coordinate	58.6	58.6	58.6	58.6	58.6	58.6	58.6	58.6	58.6	58.6	58.6
Source	1	1	1	1	1	1	1	1	1	1	1
Iteration	23	24	25	26	27	28	29	30	31	32	33
x-coordinate	−0.41	0.50	−0.45	0.52	−0.49	0.59	−0.54	6.2	−0.64	−0.05	−0.87
y-coordinate	−22.7	−0.47	−22.9	−0.45	−23.2	−0.39	−23.6	4.4	−24.2	−0.89	−25.7
z-coordinate	53.4	58.9	53.9	59.4	54.6	62.0	55.6	311	57.1	29.2	60.8
Source	2	1	2	1	2	1	2		2	1	2
Iteration	34	35	36	37	38	39	40	41	42	43	44
x-coordinate	−4.06	2e6	−4.57	−4.07	−0.15	2.72	−5.13	−2e7	884	−2.7	1.3
y-coordinate	13.6	2e6	−17.0	13.7	−0.90	−24.9	−18.6	3e7	2e6	15.3	−16.3
z-coordinate	31.3	1e8	39.4	31.4	25.8	51.3	43.3	8e7	2e8	36.4	37.6
Source	3		2	3	1	2	2			3	2

05 September 2023 05:37:08

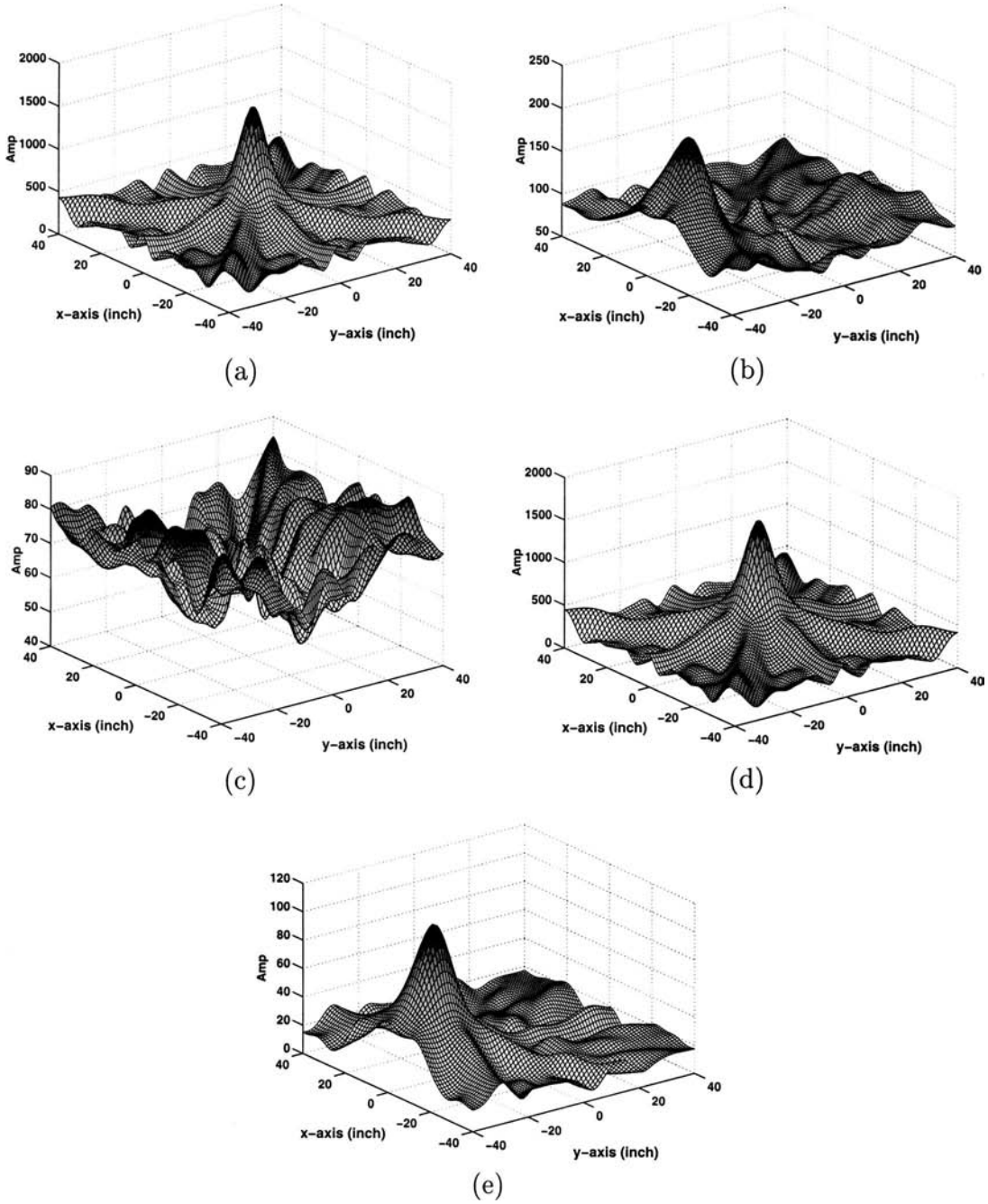

FIG. 6. Detailed results of WB-CLEAN: (a) Magnitude distribution at $z=58.8$ in. after subtracting out the second source. (b) Magnitude distribution at $z=55.2$ in. after subtracting out the first source. (c) "Residue" map at the first source at $z=58.8$ in.. (d) "Clean" map of the second source at $z=55.2$ in. (e) "Clean" map of $z=55.2$ in.

$$\rho_{s_1 s_2}(\Delta d) = \frac{\Sigma_{l=1}^{L} \hat{s}_{1,1}(\omega_l)\tilde{\hat{s}}_{1,2}^{*}(\omega_l)}{(\Sigma_{l=1}^{L} \hat{s}_{1,1}(\omega_l)\hat{s}_{1,1}^{*}(\omega_l))^{1/2} \cdot (\Sigma_{l=1}^{L} \tilde{\hat{s}}_{1,2}(\omega_l)\tilde{\hat{s}}_{1,2}^{*}(\omega_l))^{1/2}}, \tag{21}$$

where $(\cdot)^*$ denotes the complex conjugate and $\tilde{\hat{s}}_{1,2}(\omega_l) = \hat{s}_{1,2}(\omega_l)e^{j\Delta d/c_0 \omega_l}$, $l=1,...,L$. The magnitude of $\rho_{s_1 s_2}$ is plotted in Fig. 5(c). It shows that the propagation distance of the second source is about 11 in. longer than that of the first source, and the peak correlation coefficient is over 80%. It appears that the second source is due to the reflection of the calibration source from a side-plate of QFF, which is consistent with the physical measurements.

D. Application of WB-CLEAN

We apply WB-CLEAN to the same NASA data set with $\rho=0.1$. After 44 iterations (i.e., $N=44$), there is no significant signal energy left in the residue (the estimated signal magnitude is lower than the noise level). The location estimates obtained at each iteration are given in Table I. During the first 22 iterations, the algorithm "cleans" the first dominant source. Starting from iteration 23, it starts to "clean" the second source. Note that we separate the estimates of the

05 September 2023 05:37:08

TABLE II. Merits and limitations of various array processing methods.

Methods	Delay-and-sum	RELAX	CLEAN	Adaptive beamforming
Robustness	Yes	Yes	Yes	Maybe
Small snapshot no.	Yes	Yes	Yes	Maybe
Resolution	Low	High	Low	Very high
Frequency-independent resolution	No	Yes	Yes	No
Sidelobe	High	None	None	Low
Coherent sources	Yes	Yes	Yes	No
Distributed sources	Yes	No	Yes	No
Computational complexity	Low	High for large no. of sources	High for large N	High

44 iterations of WB-CLEAN into three groups: the first group corresponds to the dominant source, the second group corresponds to the second source (which is about 24 in. away from the first one along the y-axis) and the third group corresponds to noiselike sources which belong to neither the first nor the second group.

The detailed results of WB-CLEAN are shown in Fig. 6. Similar to those in Fig. 3, the surface plots of Figs. 6(a)–(e) are the 2-D magnitude distribution of different groups of sources evaluated at different z values. The magnitude distribution for each group of sources is evaluated based on the wavefield generated by all the sources within that group. Figures 6(a) and (d) correspond to $z=58.8$ in., Figs. 6(b), (c), and (e) correspond to $z=55.2$ in.

The magnitude distribution after subtracting out the second and the first sources from the original data are shown in Figs. 6(a) and (b), respectively. These results are similar to those of WB-RELAX in Figs. 3(b) and (c), respectively. The 2-D magnitude distribution of the residue is shown in Fig. 6(c). Clearly, there is no notable signal left in the residue. Comparing with Fig. 3(d), we see that WB-RELAX and WB-CLEAN give similar noise levels. The ''clean'' maps of the first and second sources are shown in Figs. 6(d) and (e), respectively. Comparing with Figs. 3(e) and (f), the peak height for the first source is almost identical with that obtained via WB-RELAX. For the second source, however, the peak height of WB-CLEAN is lower than that of WB-RELAX. This is due to the different signal estimation strategies used by WB-RELAX and WB-CLEAN. WB-RELAX estimates the signal waveform regardless of the noise level, but WB-CLEAN stops when the estimated signal power is down to the noise level. For each source, the magnitude estimated using WB-RELAX is due to both the signal and noise, while WB-CLEAN uses a cluster of small peaks above the noise level to represent the source. This is also the reason why the magnitude distribution of the residue data estimated by WB-RELAX in Fig. 3(d) has two nulls while the one estimated by WB-CLEAN in Fig. 6(c) does not. So the peak height of WB-CLEAN is always lower than that of WB-RELAX. This is more obvious for weak signals. In Fig. 4(b); the image of the acoustic source distribution is constructed using the results of WB-CLEAN. The total powers of the first and the second sources are calculated by using Eq. (19). The estimated SNR is 13.4 dB. Instead of getting separate point sources as when using WB-RELAX, WB-CLEAN gives us a map of the sources, which is a desired property if we are dealing with distributed sources. Comparing Figs. 4(a) and (b), we observe that WB-RELAX gives us a ''super clean'' image.

For comparison purposes, the merits and limitations of WB-RELAX, WB-CLEAN, as well as other existing array processing methods are listed in Table II. For the NASA data, the computational complexities of WB-RELAX and WB-CLEAN were approximately 5 and 44 times larger than that of the delay-and-sum approach.

VI. CONCLUSIONS

In this paper, two related algorithms, WB-RELAX and WB-CLEAN, were presented for the near-field acoustic imaging problem. The former is a parametric approach that can be used efficiently for point source imaging without the sidelobe problems suffered by the delay-and-sum beamforming approaches. The latter algorithm, which does not have sidelobe problems either, behaves more like a nonparametric approach and can be used for both point and distributed source imaging. Moreover, neither algorithm suffers from the severe performance degradations encountered by the adaptive beamforming methods when the number of snapshots is small and/or the sources are highly correlated or coherent with each other. The performance of WB-RELAX and WB-CLEAN was demonstrated by applying them to measured data obtained at the NASA Langley Quiet Flow Facility (QFF) using a small aperture directional array. Somewhat surprisingly, using these algorithms, we have not only accurately determined the parameters of the dominant (calibration) source, but also discovered a highly correlated low-power multipath, which appears to be due to the reflection of the dominant source from a side-plate of the QFF.

ACKNOWLEDGMENTS

This work was supported in part by the National Science Foundation Grants ECS-0097636 and CCR-0104887, the Swedish Science Council (VR), and the Swedish Foundation for International Cooperation in Research and Higher Education (STINT). The Small Aperture Directional Array datasets used in the generation of results shown in this work were provided under the NASA Langley Research Center Grant No. NAG-1-2133.

Arnold, D. P. (**2001**). *A MEMS-Based Directional Acoustic Array for Aeroacoustic Measurements*, M.S thesis, University of Florida, Gainesville, FL.

Bent, P. H., Guo, Y., Horne, W. C., and Watts, M. E. (**1996**). ''Airframe noise scaling and source localization,'' Proceedings of National Conference on Noise Control Engineering, Vol. 1, 145–150.

Brooks, T. F., and Humphreys, Jr., W. M. (**1999**). ''Effect of directional array size on the measurement of airframe noise components,'' AIAA Paper 99-1958, 5th AIAA/CEAS Aeroacoustics Conference and Exhibit, Bellevue, WA.

Brooks, T. F., Marcolini, M. A., and Pope, D. S. (**1987**). ''A directional array approach for the measurement of rotor noise source distributions with controlled spatial resolution,'' J. Sound Vib. **112**, 192–197.

05 September 2023 05:37:08

Dougherty, R. P., and Stoker, R. W. (**1998**). ''Sidelobe suppression for phased array aeroacoustic measurements,'' AIAA Paper 98-2242, 4th AIAA/CEAS Aeroacoustics Conference, 19th AIAA Aeroacoustics Conference, Toulouse, France.

Gramann, R. A., and Mocio, J. (**1993**). ''Aero-acoustic measurements in wind tunnels using conventional and adaptive beamforming methods,'' AIAA Paper 93-4341.

Högbom, J. A. (**1974**). ''Aperture synthesis with a non-regular distribution of interferometer baselines,'' Astron. Astrophys., Suppl. Ser. **15**, 417–426.

Humphreys, Jr., W. M., Brooks, T. F., Hunter, Jr., W. W., and Meadows, K. R. (**1998**). ''Design and use of microphone directional arrays for aeroacoustic measurements,'' AIAA Paper 98-0471, AIAA, 36th Aerospace Sciences Meeting and Exhibit, Reno, NV.

Li, J., and Stoica, P. (**1996**). ''Efficient mixed-spectrum estimation with applications to target feature extraction,'' IEEE Trans. Signal Process. **44**, 281–295.

Li, J., Stoica, P., and Zheng, D. (**1997**). ''Angle and waveform estimation via RELAX,'' IEEE Trans. Aerosp. Electron. Syst. **33**, 1077–1087.

Meadows, K. R., Brooks, T. F., Humphreys, Jr., W. M., Hunter, W. W., and Gerhold, C. H. (**1997**). ''Aeroacoustic measurements of a wing-flap configuration,'' AIAA Paper 97-1595, 3rd AIAA/CEAS Aeroacoustics Conference, Atlanta, GA.

Mosher, M. (**1996**). ''Phased arrays for aeroacoustic testing: Theoretical development,'' AIAA Paper 96-1713, 2nd AIAA/CEAS Aeroacoustics Conference, State College, PA.

Mosher, M., Watts, M. E., Barnes, M., and Bardina, J. (**1999**). ''Microphone array phased processing system (mapps)—phased array system for acoustic measurements in a wind tunnel,'' AIAA Paper 99-5576, 18th ASME Wind Energy Symposium, AIAA, 37th Aerospace Sciences Meeting and Exhibit, Reno, NV.

Mosher, M., Watts, M. E., Jaeger, S. M., and Jovic, S. (**1997**). ''Calibration of microphone arrays for phased array processing,'' AIAA Paper 97-1678, 3rd AIAA/CEAS Aeroacoustics Conference, Atlanta, GA.

Nelder, J. A., and Mead, R. (**1965**). ''A simplex method for function minimization,'' Comput. J. **7**, 308–313.

Piet, J. F., and Elias, G. (**1997**). ''Airframe noise source localization using a microphone array,'' AIAA Paper 97-1643, 3rd AIAA/CEAS Aeroacoustics Conference, Atlanta, GA.

Piet, J. F., Elias, G., and Lebigot, P. (**1999**). ''Localization of acoustic source from a landing aircraft with a microphone array,'' AIAA Paper 99-1811, AIAA Space Technology Conference and Exposition, Albuquerque, NM.

Powell, M. J. D. (**1964**). ''An efficient method for finding the minimum of a function of several variables without calculating derivatives,'' Comput. J. (UK) **7**, 155–162.

Rosenbrock, H. H. (**1960**). ''An automatic method for finding the greatest or least value of a function,'' Comput. J. (UK) **3**, 175–184.

Stoica, P., and Nehorai, A. (**1989**). ''Statistical analysis of two nonlinear least-squares estimators of sine-wave parameters in the colored-noise case,'' Circuits Syst. Signal Process. **8**, 3–15.

Stoica, P., Jakobsson, A., and Li, J. (**1997**). ''Sinusoid parameter estimation in the colored noise case: asymptotic Cramér-Rao bound, maximum likelihood and nonlinear least-squares,'' IEEE Trans. Signal Process. **45**, 2048–2059.

Storms, B. L., Hayes, J. A., Ross, J. C., and Moriarty, P. J. (**1999**). ''Aeroacoustic measurements of slat noise on a three-dimensional high-lift system,'' AIAA Paper 99-1957, 33rd AIAA Thermophysics Conference, Norfolk, VA.

Van Trees, H. L. (**2002**). *Optimum Array Processing, Part IV of Detection, Estimation, and Modulation Theory* (Wiley, New York).

Watts, M. E., Mosher, M., and Barnes, M. J. (**1996**). ''The microphone array phased processing system (mapps),'' AIAA Paper 96-1714, 2nd AIAA/CEAS Aeroacoustics Conference, State College, PA.

Zatman, M. (**1998**). ''How narrow is narrowband?'' IEE Proc. Radar, Sonar Navigat. **145**, 85–91.

05 September 2023 05:37:08