Circuit Diagram

Black - Ground
Blue - Data
Red - Hot (V5)

Reference Photo

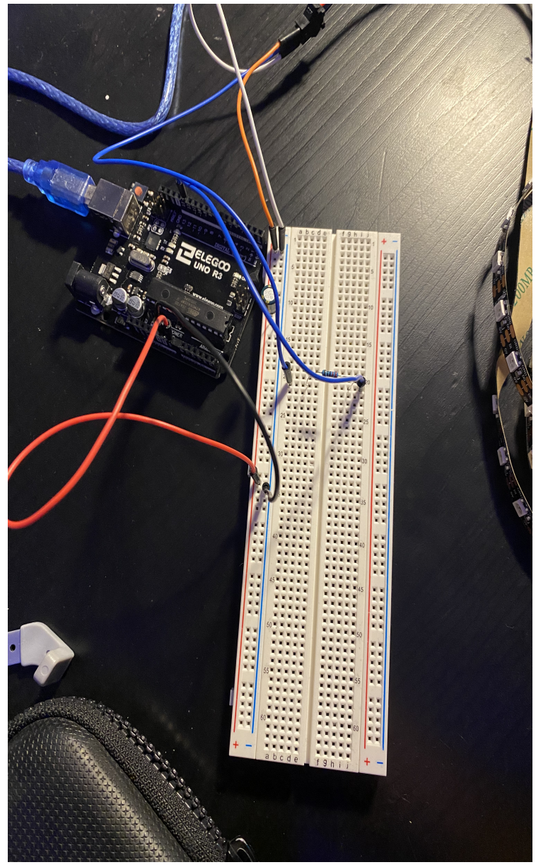

led strip connector
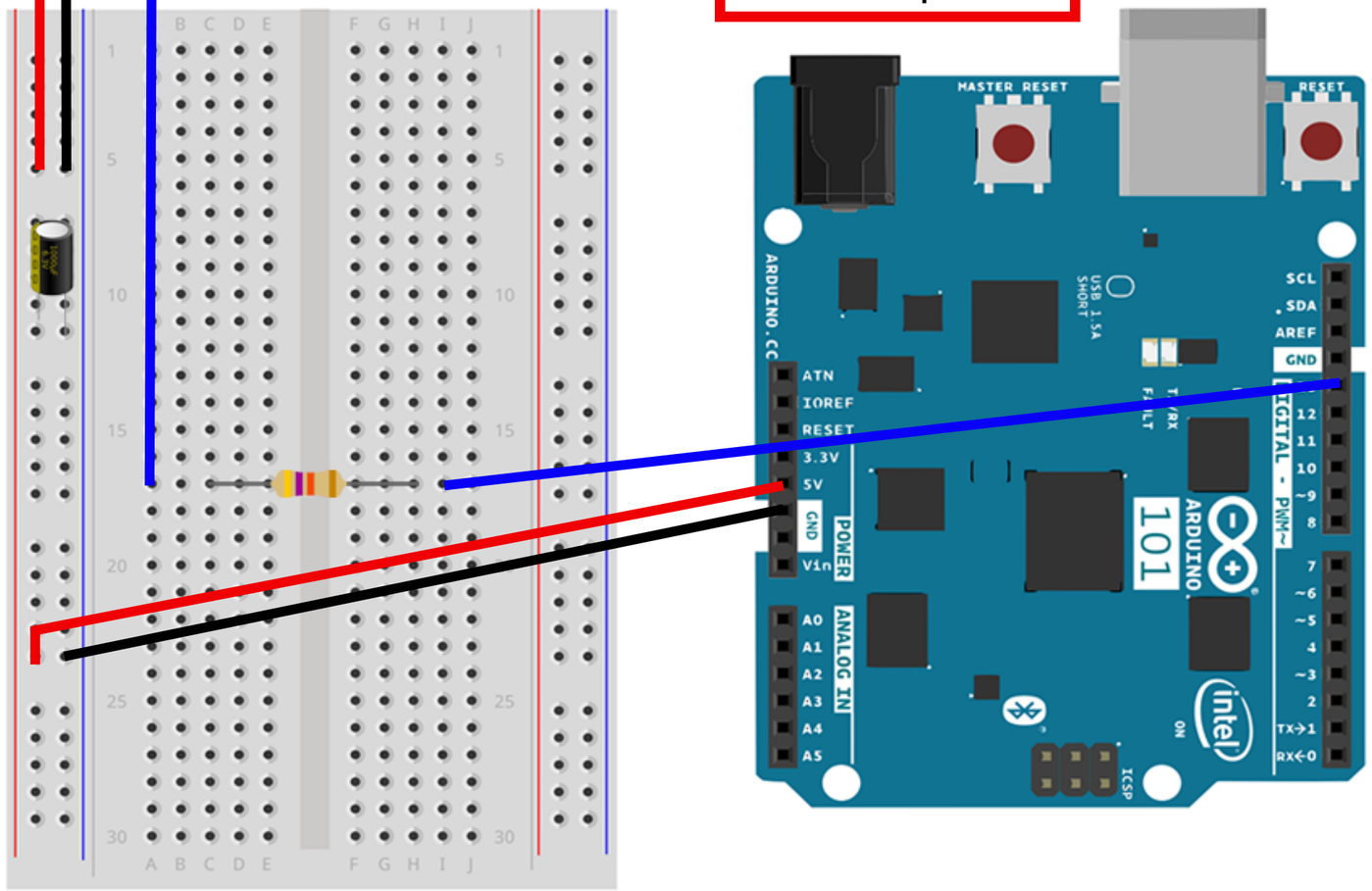
external 5v DC power