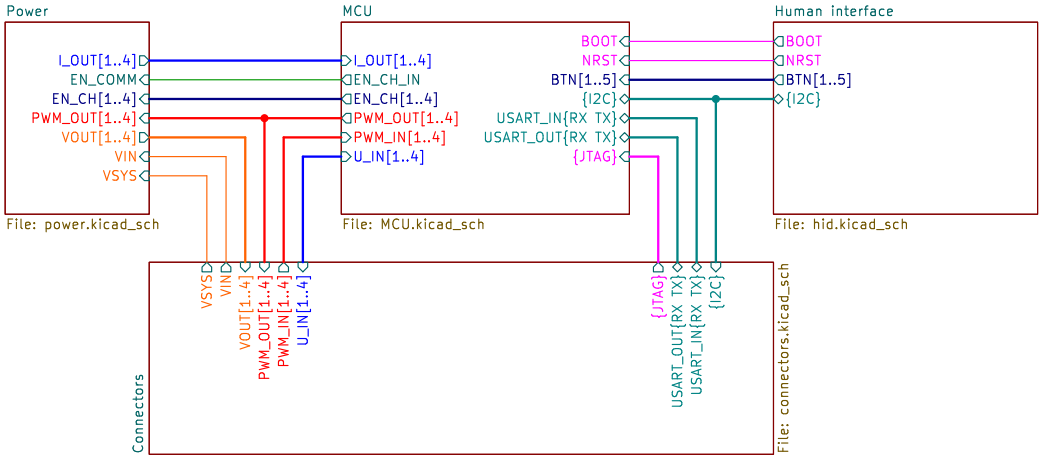

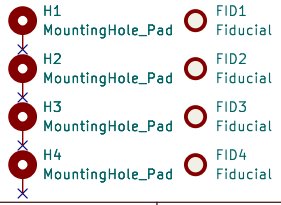

"Engineered at overengineering department"

CarbonaraProduction

Sheet: /
File: FanCTRL.kicad_sch

Title: FanCTRL

Size: A4	Date: 2026-01-18	**Rev: v1.0**
KiCad E.D.A. 9.0.7		Id: 1/24

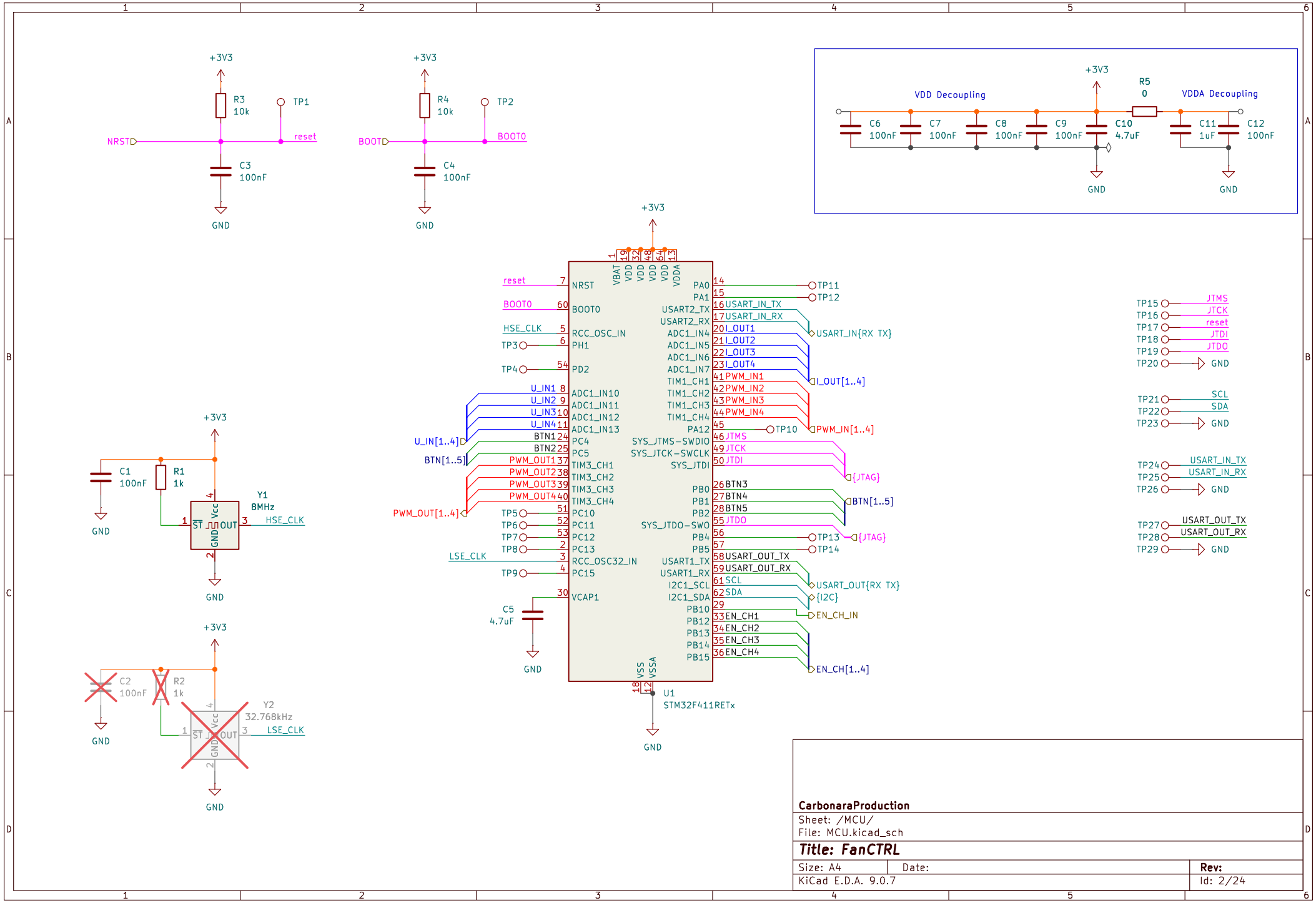

CarbonaraProduction

Sheet: /MCU/

File: MCU.kicad_sch

Title: FanCTRL

Size: A4	Date:	Rev:
KiCad E.D.A. 9.0.7		Id: 2/24

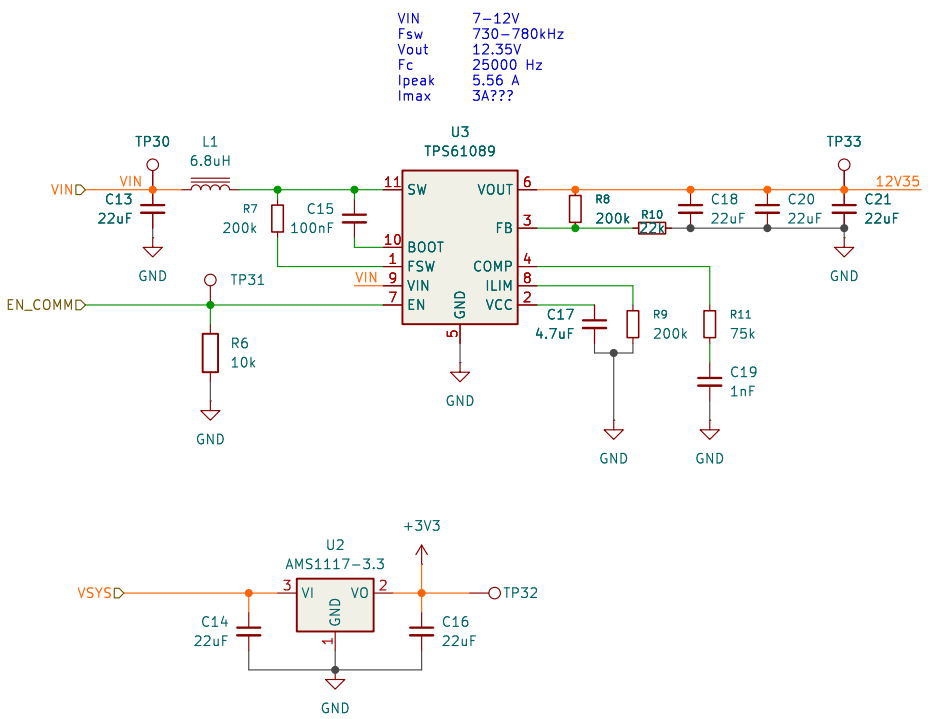

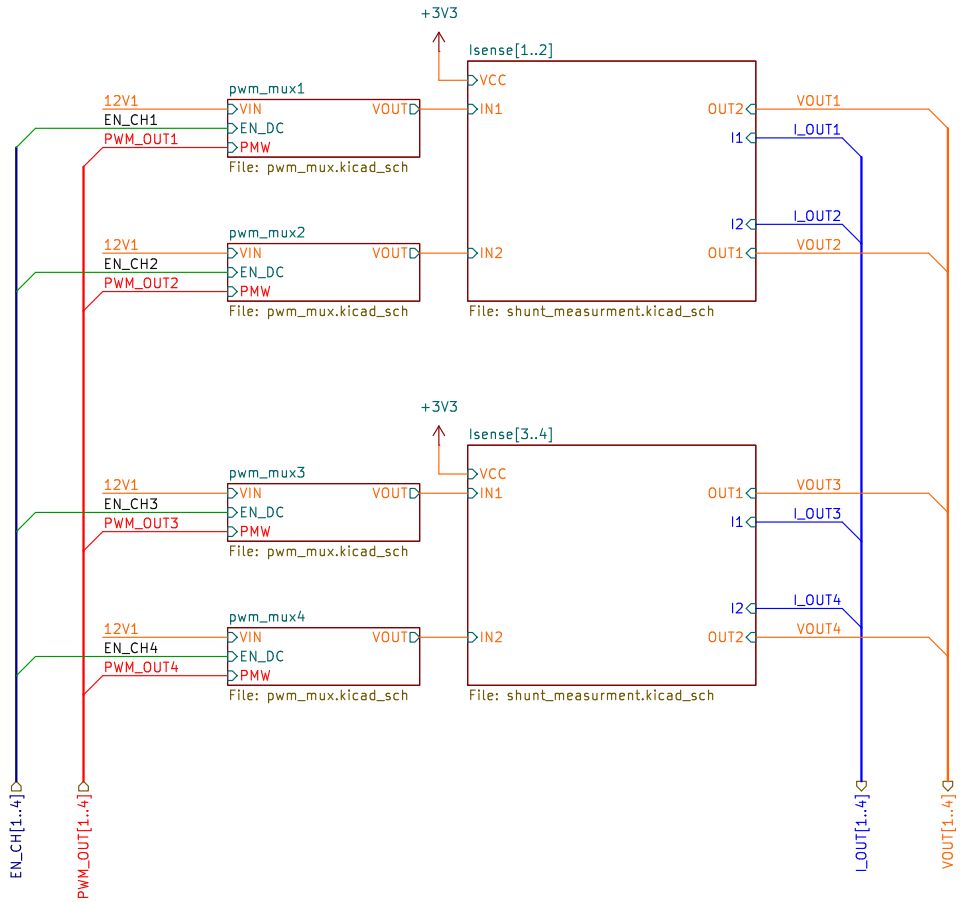

CarbonaraProduction

Sheet: /Power/
File: power.kicad_sch

Title: FanCTRL

Size: A4	Date:	**Rev:**
KiCad E.D.A. 9.0.7		Id: 3/24

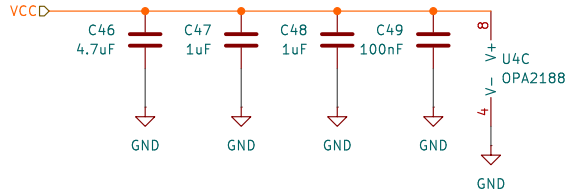

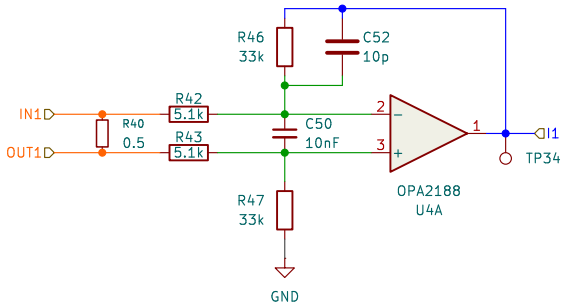

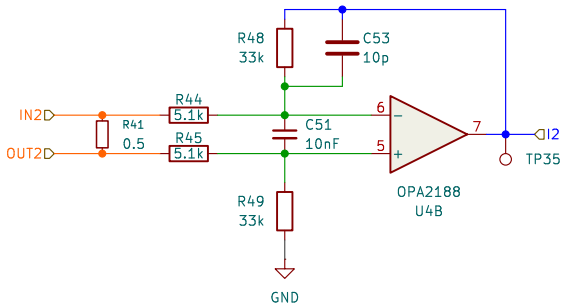

CarbonaraProduction

Sheet: /Power/Isense[1..2]/
File: shunt_measurment.kicad_sch

Title: FanCTRL

Size: A4	Date:	**Rev:**
KiCad E.D.A. 9.0.7		Id: 13/24

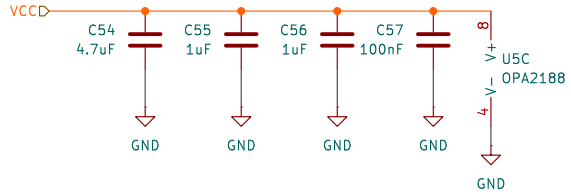

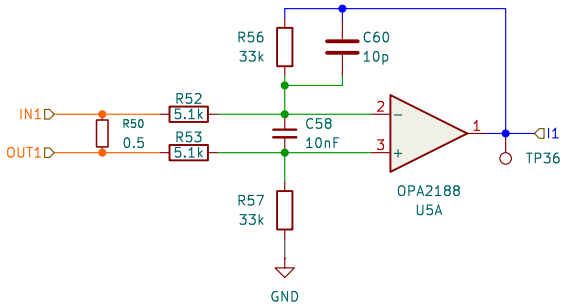

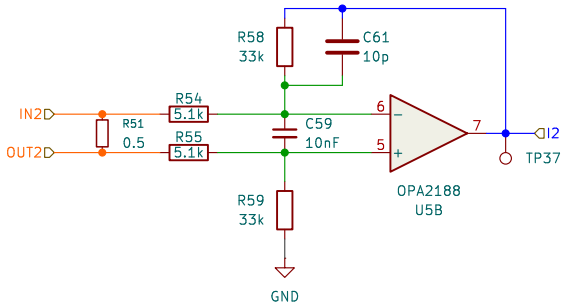

CarbonaraProduction

Sheet: /Power/Isense[3..4]/
File: shunt_measurment.kicad_sch

Title: FanCTRL

Size: A4	Date:	**Rev:**
KiCad E.D.A. 9.0.7		Id: 14/24

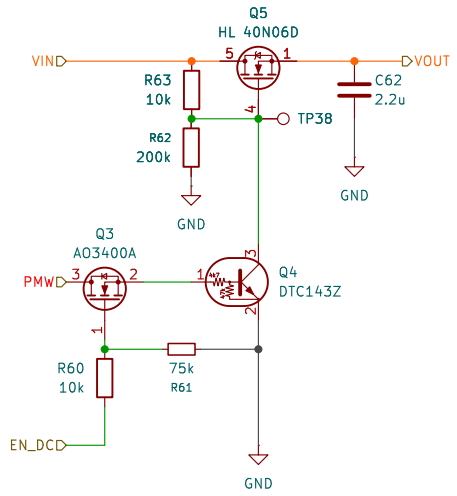

CarbonaraProduction

Sheet: /Power/pwm_mux1/
File: pwm_mux.kicad_sch

Title: FanCTRL

Size: A4	Date:	**Rev:**
KiCad E.D.A. 9.0.7		Id: 15/24

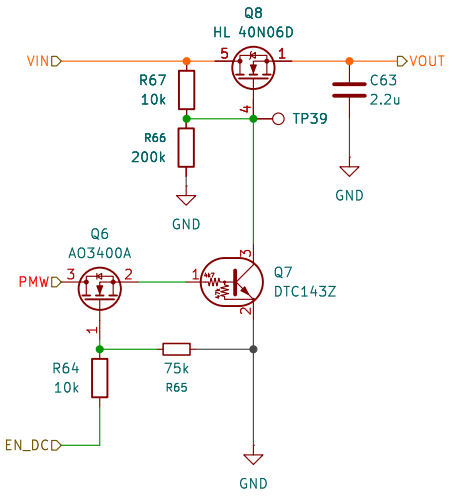

CarbonaraProduction

Sheet: /Power/pwm_mux2/
File: pwm_mux.kicad_sch

Title: FanCTRL

Size: A4	Date:	**Rev:**
KiCad E.D.A. 9.0.7		Id: 16/24

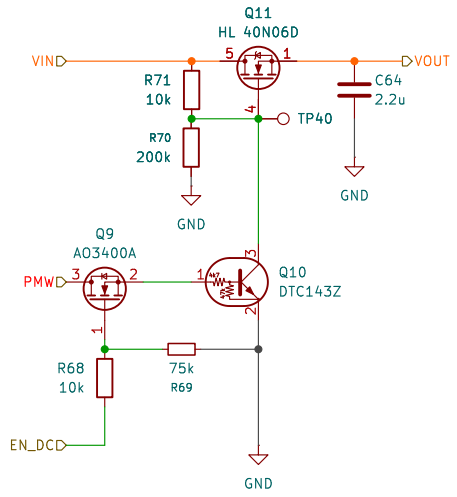

CarbonaraProduction

Sheet: /Power/pwm_mux3/
File: pwm_mux.kicad_sch

Title: FanCTRL

Size: A4	Date:	**Rev:**
KiCad E.D.A. 9.0.7		Id: 17/24

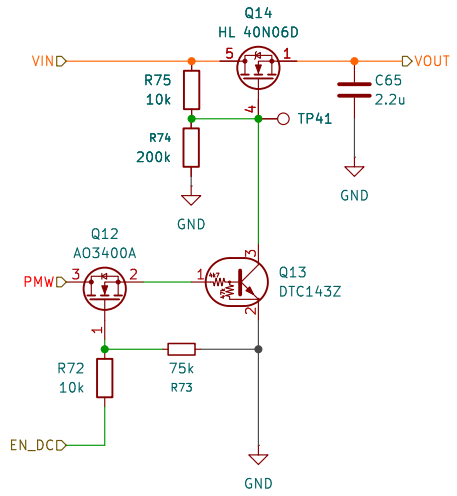

CarbonaraProduction

Sheet: /Power/pwm_mux4/
File: pwm_mux.kicad_sch

Title: FanCTRL

Size: A4	Date:	**Rev:**
KiCad E.D.A. 9.0.7		Id: 18/24

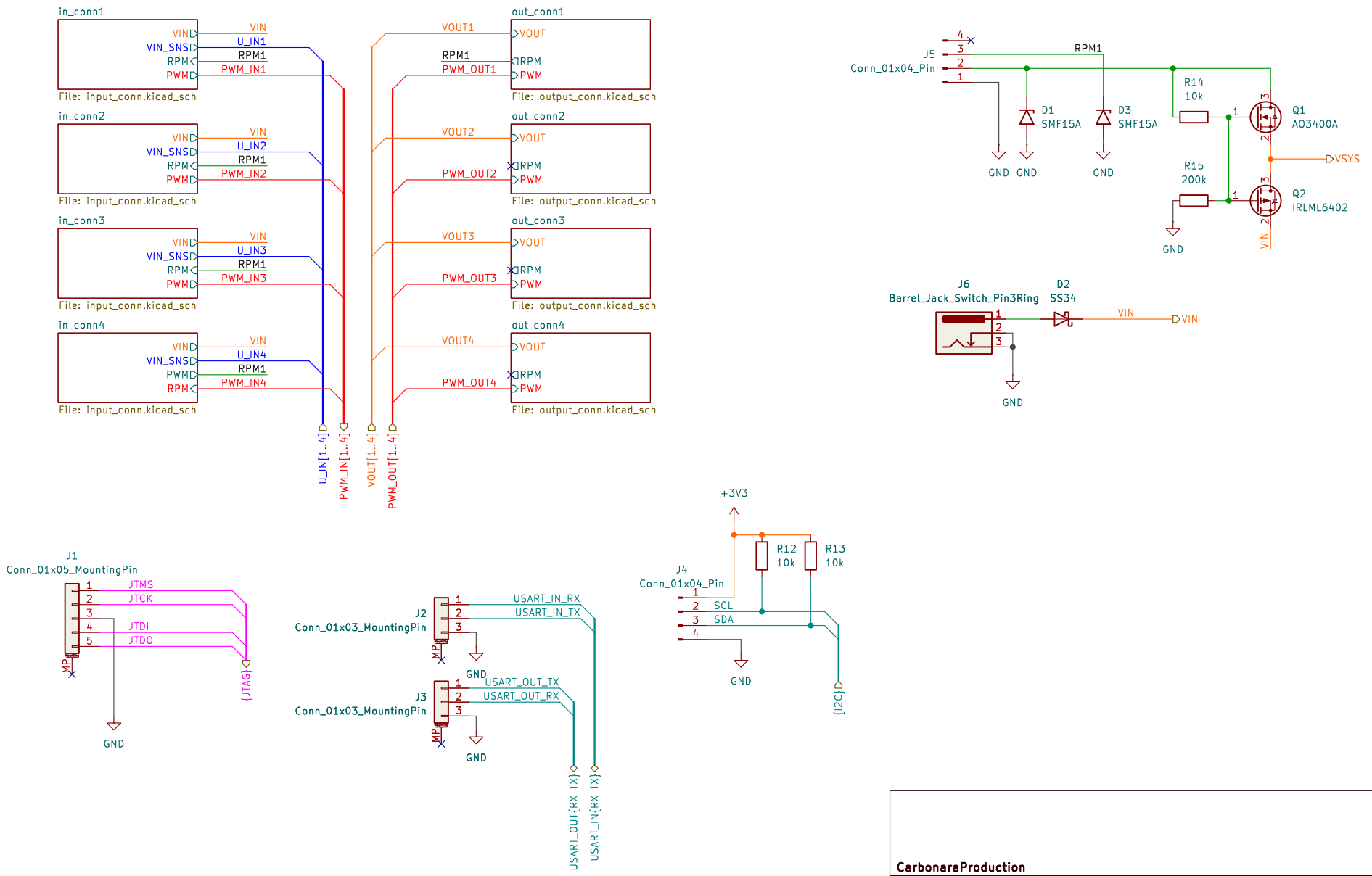

CarbonaraProduction

Sheet: /Connectors/

File: connectors.kicad_sch

Title: FanCTRL

Size: A4	Date:	Rev:
KiCad E.D.A. 9.0.7		Id: 4/24

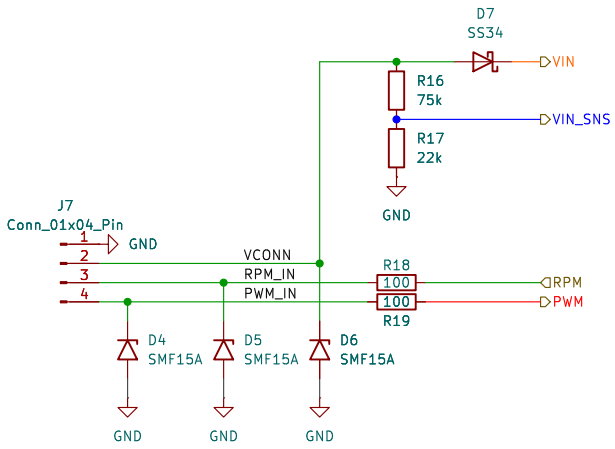

CarbonaraProduction

Sheet: /Connectors/in_conn1/
File: input_conn.kicad_sch

Title: FanCTRL

Size: A4	Date:	**Rev:**
KiCad E.D.A. 9.0.7		Id: 5/24

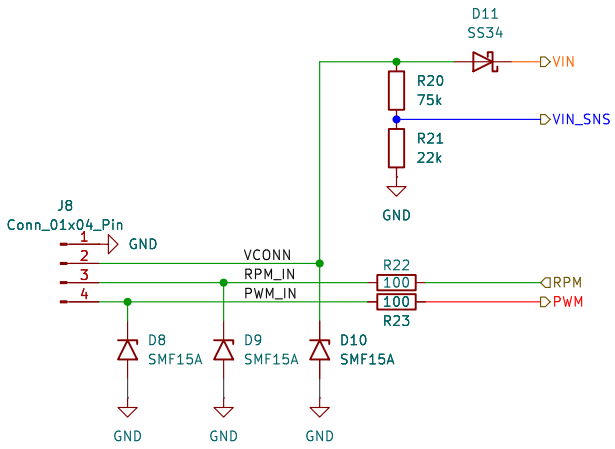

CarbonaraProduction

Sheet: /Connectors/in_conn2/
File: input_conn.kicad_sch

Title: FanCTRL

Size: A4	Date:	**Rev:**
KiCad E.D.A. 9.0.7		Id: 6/24

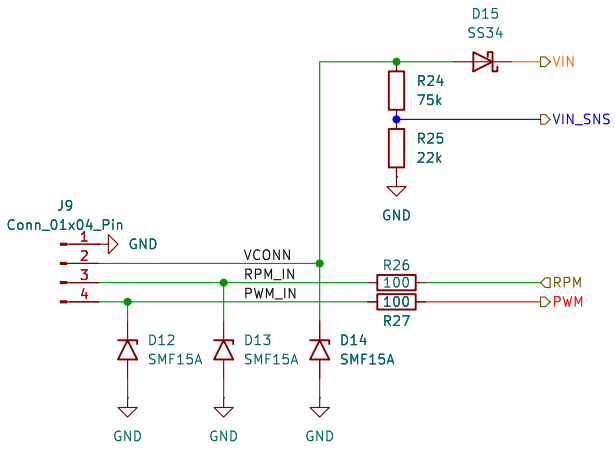

CarbonaraProduction

Sheet: /Connectors/in_conn3/
File: input_conn.kicad_sch

Title: FanCTRL

Size: A4	Date:	**Rev:**
KiCad E.D.A. 9.0.7		Id: 7/24

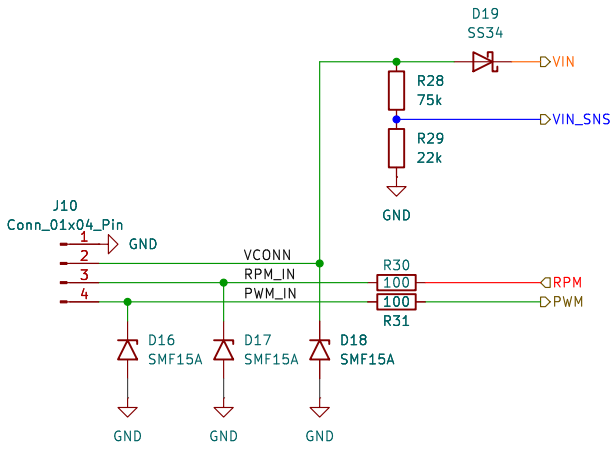

CarbonaraProduction

Sheet: /Connectors/in_conn4/
File: input_conn.kicad_sch

Title: FanCTRL

Size: A4	Date:	**Rev:**
KiCad E.D.A. 9.0.7		Id: 8/24

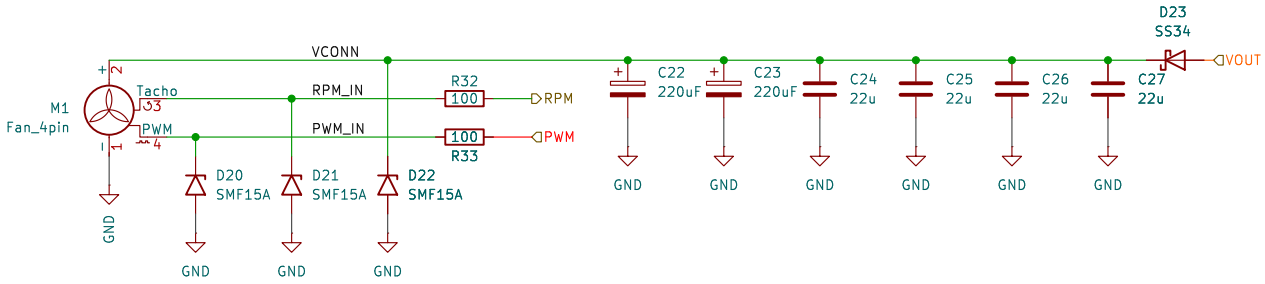

CarbonaraProduction

Sheet: /Connectors/out_conn1/
File: output_conn.kicad_sch

Title: FanCTRL

Size: A4	Date:	**Rev:**
KiCad E.D.A. 9.0.7		Id: 9/24

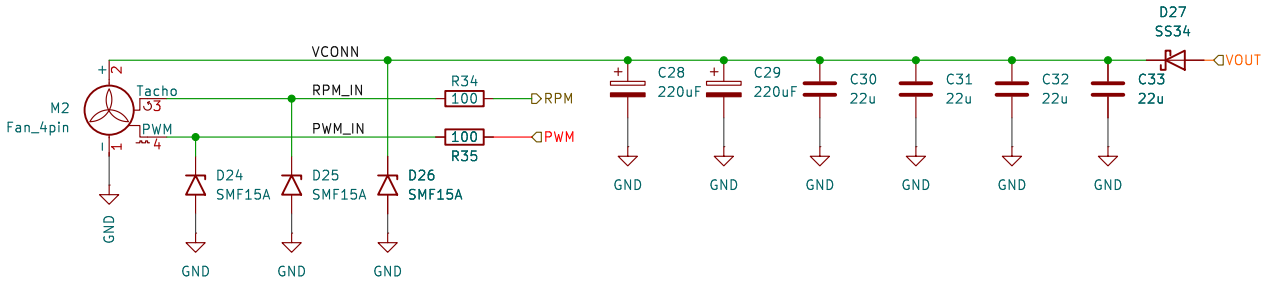

CarbonaraProduction

Sheet: /Connectors/out_conn2/
File: output_conn.kicad_sch

Title: FanCTRL

Size: A4	Date:	**Rev:**
KiCad E.D.A. 9.0.7		Id: 10/24

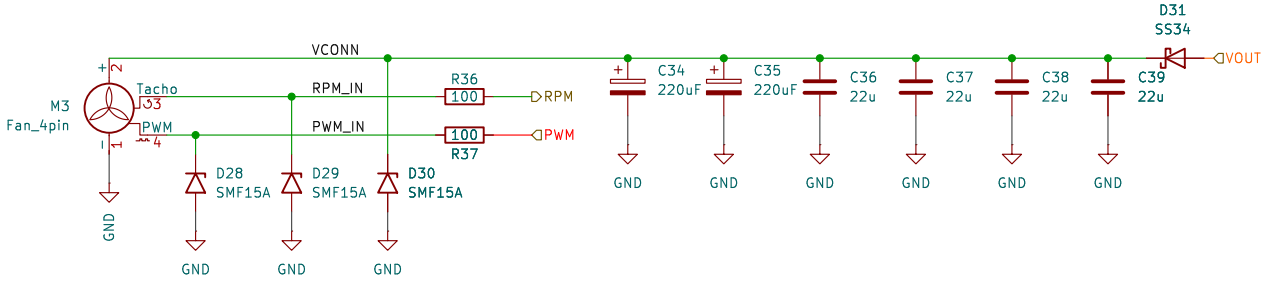

CarbonaraProduction

Sheet: /Connectors/out_conn3/
File: output_conn.kicad_sch

Title: FanCTRL

Size: A4	Date:	**Rev:**
KiCad E.D.A. 9.0.7		Id: 11/24

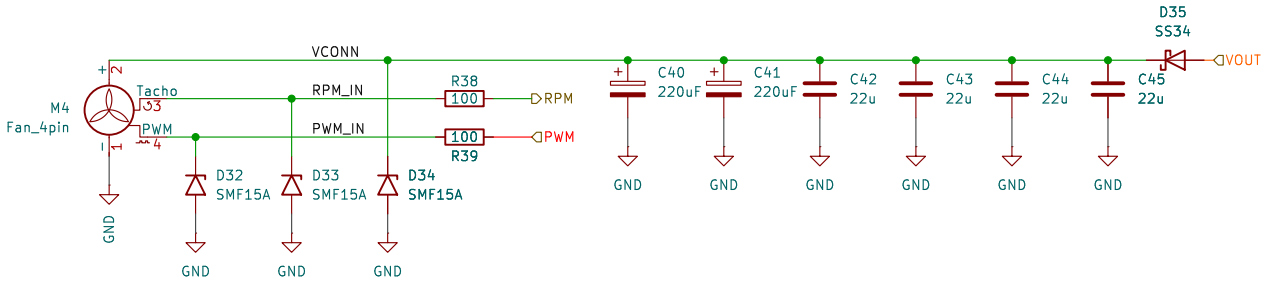

CarbonaraProduction

Sheet: /Connectors/out_conn4/
File: output_conn.kicad_sch

Title: FanCTRL

Size: A4	Date:	**Rev:**
KiCad E.D.A. 9.0.7		Id: 12/24

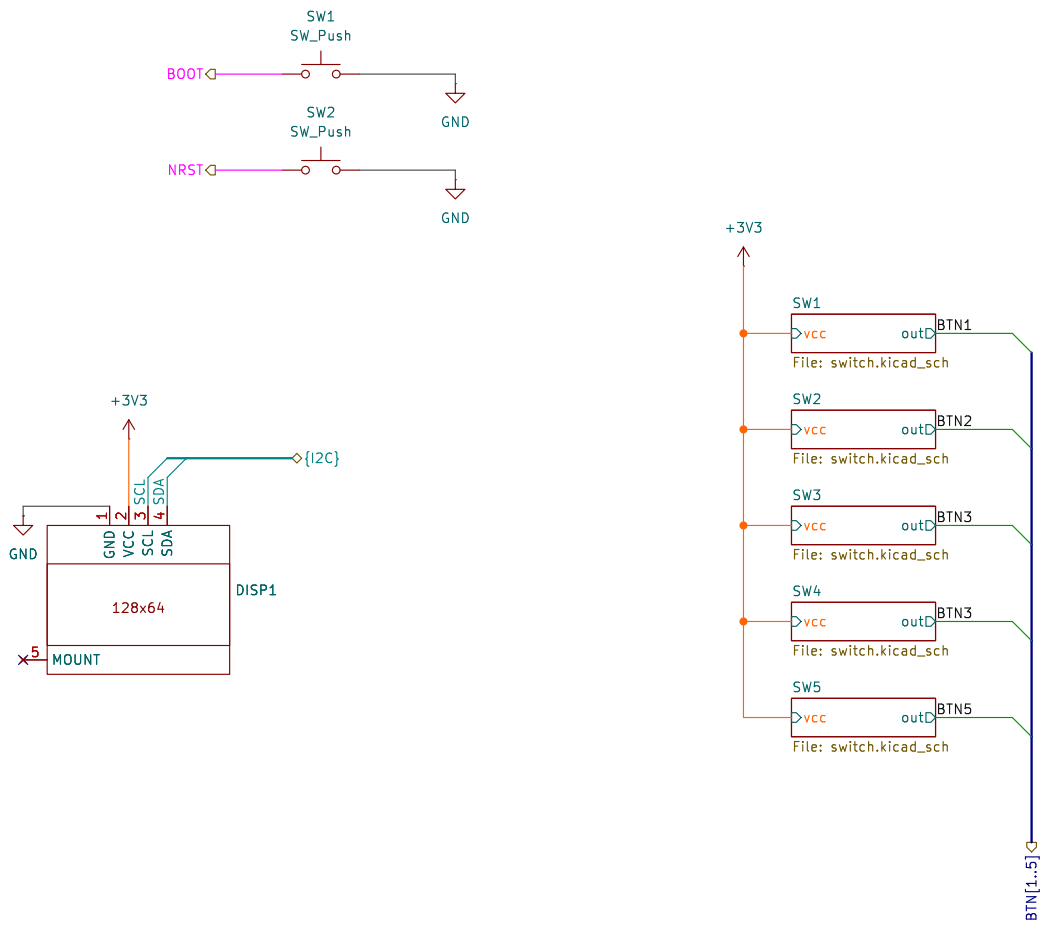

CarbonaraProduction

Sheet: /Human interface/
File: hid.kicad_sch

Title: FanCTRL

Size: A4	Date:	**Rev:**
KiCad E.D.A. 9.0.7		Id: 19/24

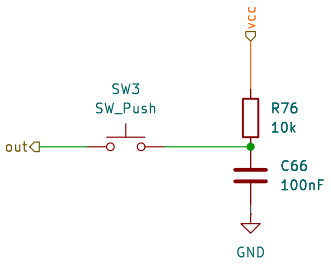

CarbonaraProduction

Sheet: /Human interface/SW1/
File: switch.kicad_sch

Title: FanCTRL

Size: A4	Date:	**Rev:**
KiCad E.D.A. 9.0.7		Id: 20/24

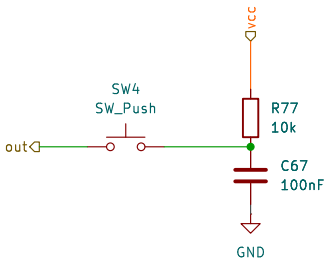

CarbonaraProduction

Sheet: /Human interface/SW2/
File: switch.kicad_sch

Title: FanCTRL

Size: A4	Date:	**Rev:**
KiCad E.D.A. 9.0.7		Id: 21/24

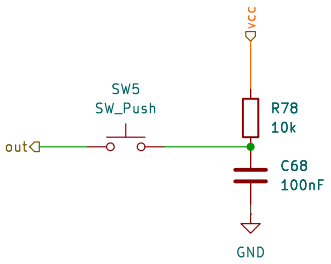

CarbonaraProduction

Sheet: /Human interface/SW3/
File: switch.kicad_sch

Title: FanCTRL

Size: A4	Date:	**Rev:**
KiCad E.D.A. 9.0.7		Id: 22/24

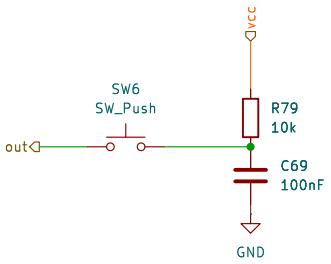

CarbonaraProduction

Sheet: /Human interface/SW4/
File: switch.kicad_sch

Title: FanCTRL

Size: A4	Date:	**Rev:**
KiCad E.D.A. 9.0.7		Id: 23/24

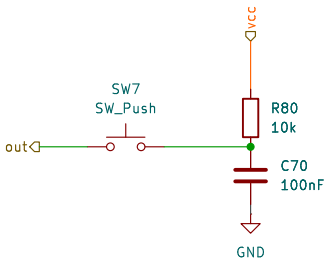

CarbonaraProduction

Sheet: /Human interface/SW5/
File: switch.kicad_sch

Title: FanCTRL

Size: A4	Date:	**Rev:**
KiCad E.D.A. 9.0.7		Id: 24/24