Chapter 2

Network Models

Partially Edited and
Presented by
Dr. Md. Abir Hossain

Copyright © The McGraw-Hill Companies, Inc. Permission required for reproduction or display.

2-1 LAYERED TASKS

We use the concept of layers in our daily life. As an example, let us consider two friends who communicate through postal mail. The process of sending a letter to a friend would be complex if there were no services available from the post office.

Topics discussed in this section:

Sender, Receiver, and Carrier
Hierarchy

Figure 2.1 Tasks involved in sending a letter

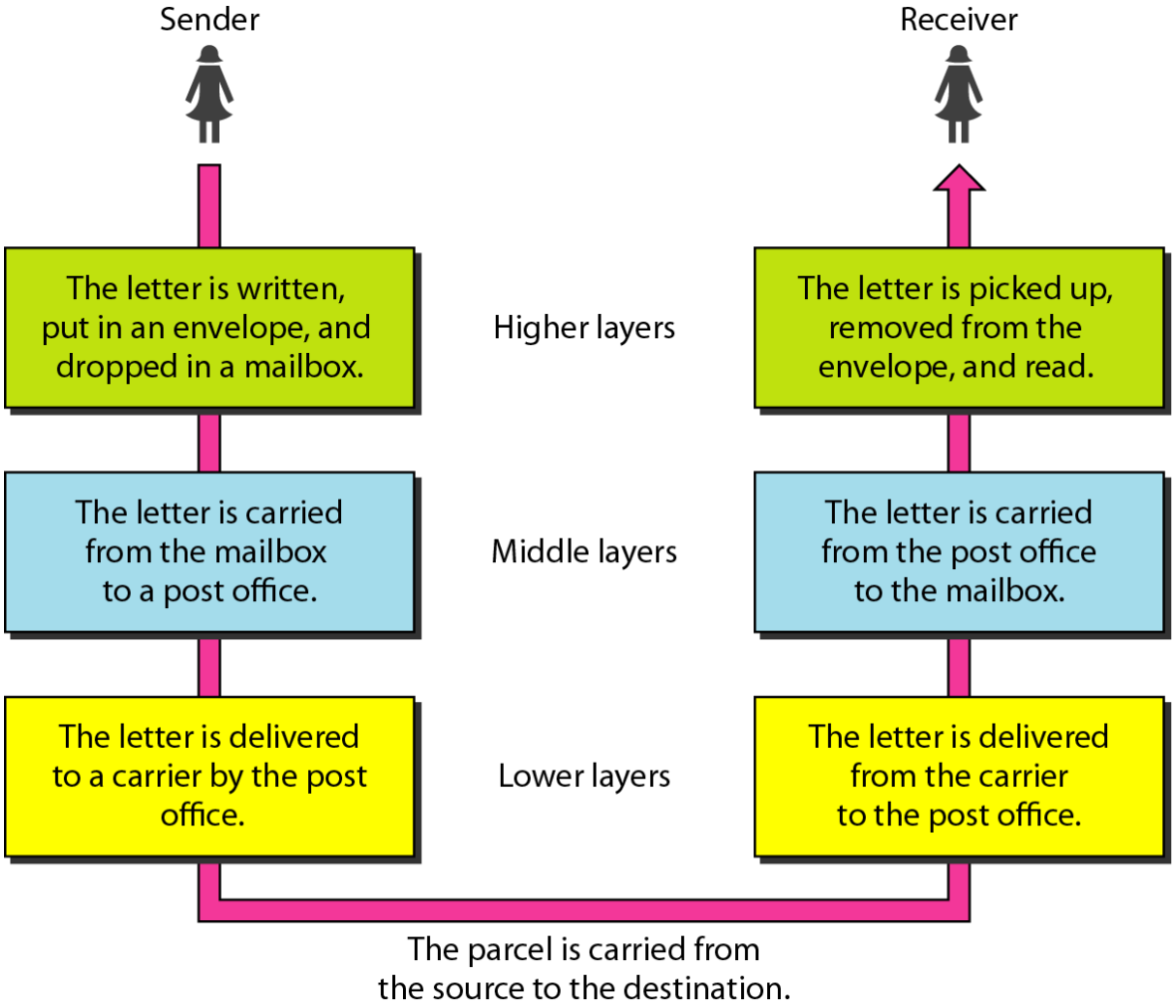

2-2 THE OSI MODEL

- ***The International Standards Organization (ISO) is a multinational body dedicated to worldwide agreement on international standards.***
- ***An ISO standard that covers all aspects of network communications is the Open Systems Interconnection (OSI) model.***
- ***It was first introduced in the late 1970s.***

Topics discussed in this section:

Layered Architecture
Peer-to-Peer Processes
Encapsulation

Note

ISO is the organization.
OSI is the model.

Figure 2.2 *Seven layers of the OSI model*

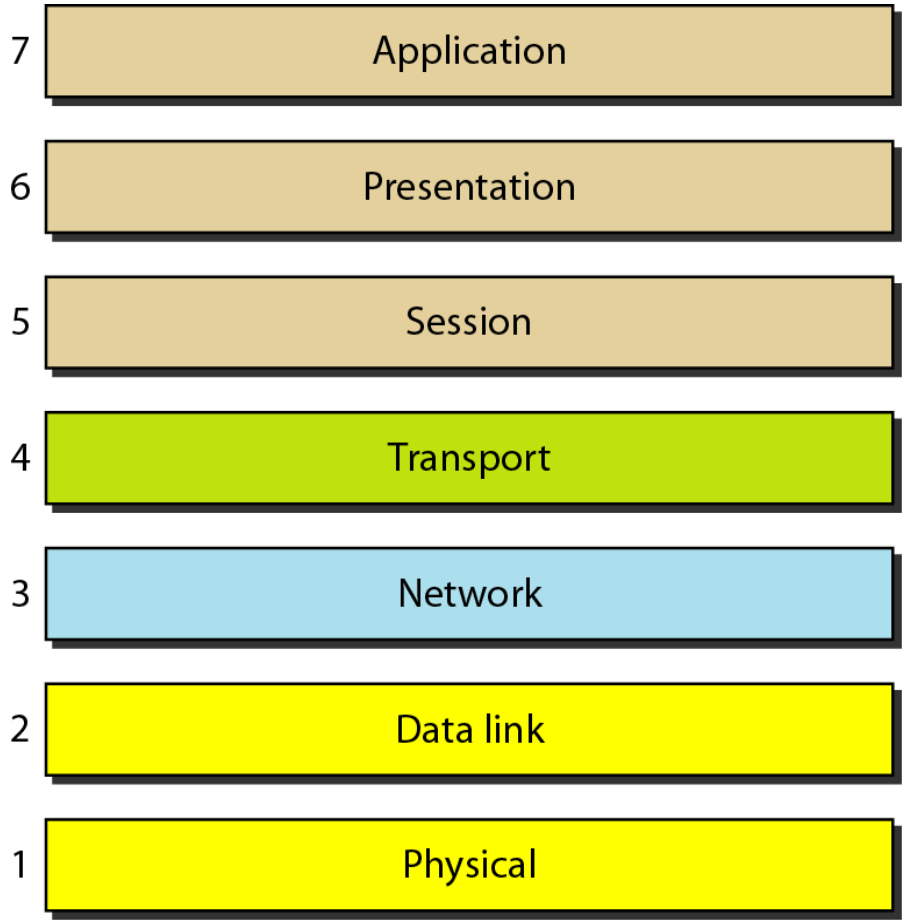

Figure 2.3 *The interaction between layers in the OSI model*

CT

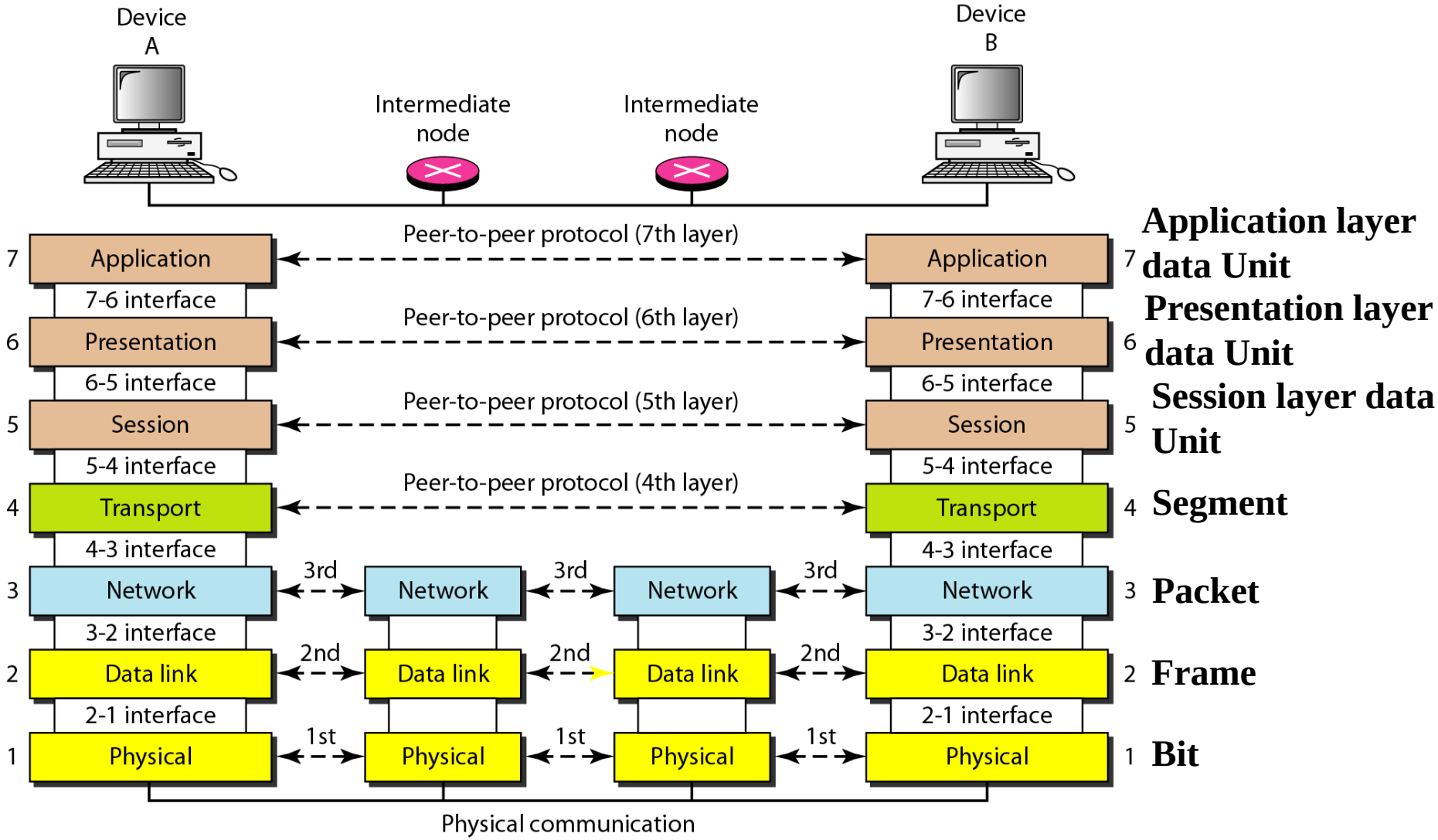

Figure 2.4 *An exchange using the OSI model*

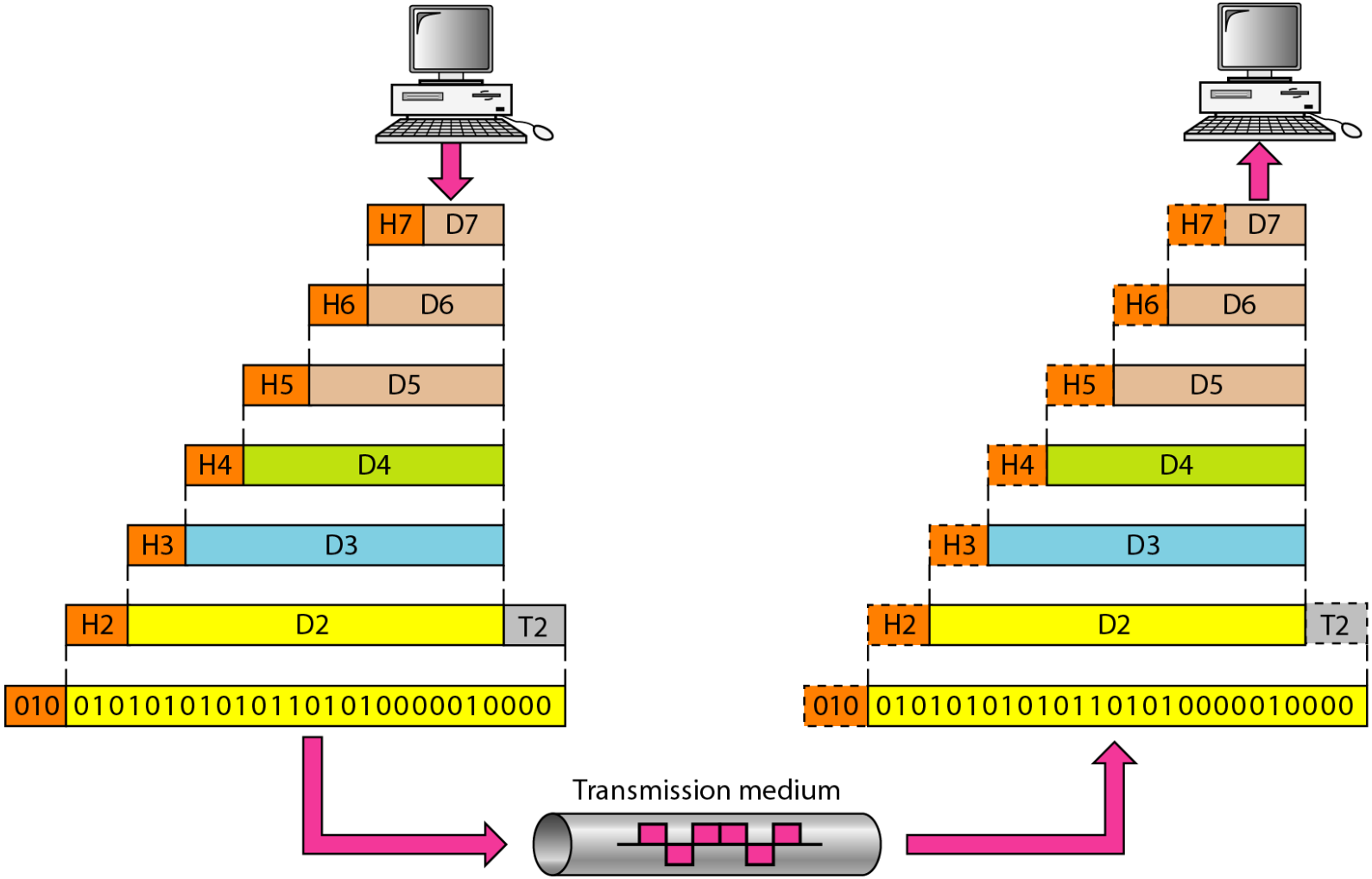

2-3 LAYERS IN THE OSI MODEL

In this section we briefly describe the functions of each layer in the OSI model.

Topics discussed in this section:

Physical Layer
Data Link Layer
Network Layer
Transport Layer
Session Layer
Presentation Layer
Application Layer

Figure 2.5 *Physical layer*

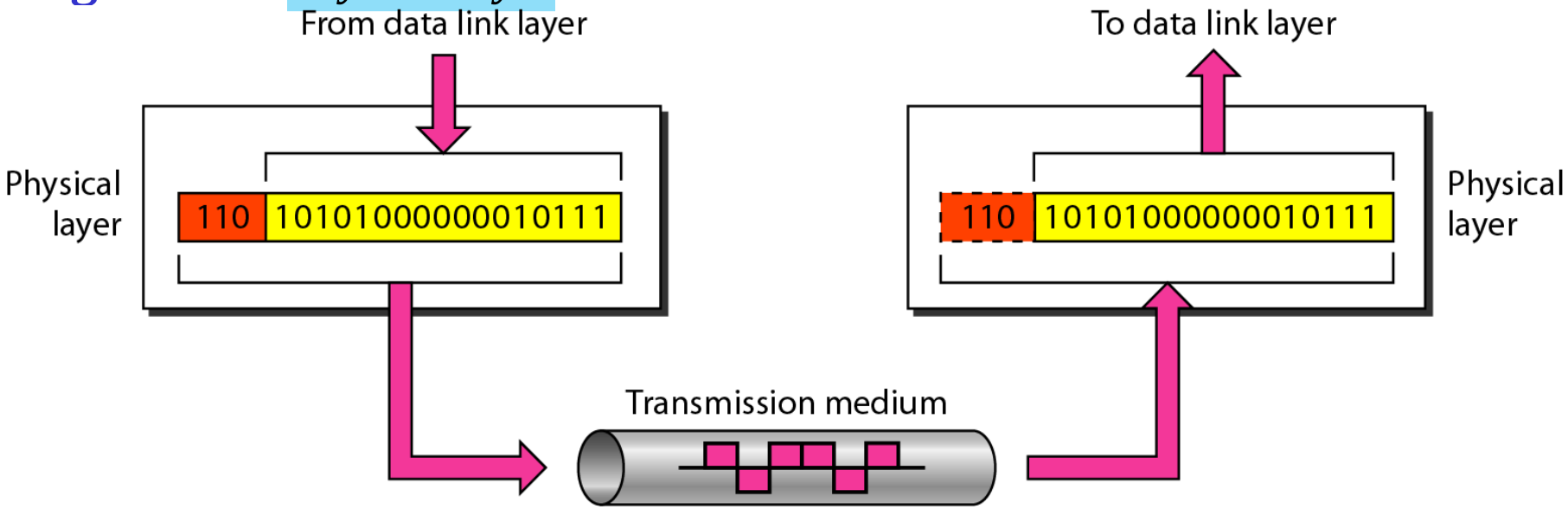

- Carry a bit stream over the physical medium
- Define the procedure and fuctions that physical devices and interfaces have to perform
- Physical layer concern about
  - Physical characteristics of interface and medium
  - Representation of bits
  - Data rate
  - Synchronization of bits
  - Line configuration- point to point dedicated link or others
  - Physical topology- star/mesh/ring
  - Transmission mode- simplex/half duplex/ full duplex

Note

The physical layer is responsible for movements of individual bits from one hop (node) to the next.

Figure 2.6 *Data link layer*

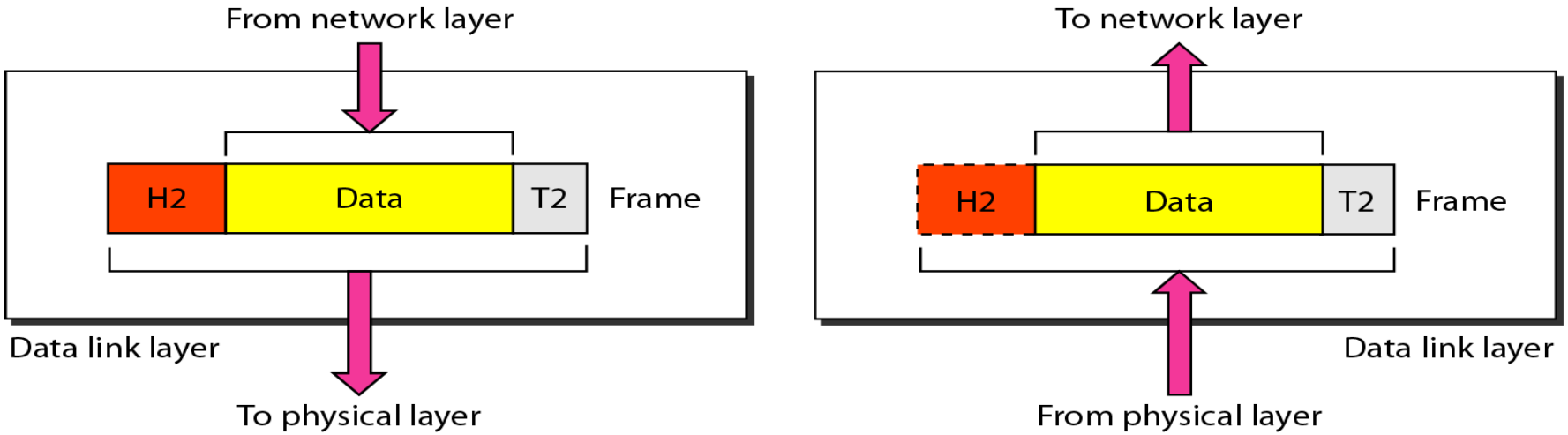

- Data link layer concern about
  - **Framing-** Divides the stream of bits into manageable data units
  - **Physical addressing-**Add header of the frame to define sender and receiver
  - **Flow control-** Apply flow control mechanism to control flow of bits
  - **Error control-** Error control using mechanism to detect and retransmit damaged or lost frames and added at the end of the frame.
  - **Access control-** For multiple connection to a same link, link layer determined which device has control over the link at any given time

Note

The data link layer is responsible for moving frames from one hop (node) to the next.

Figure 2.8 *Network layer*

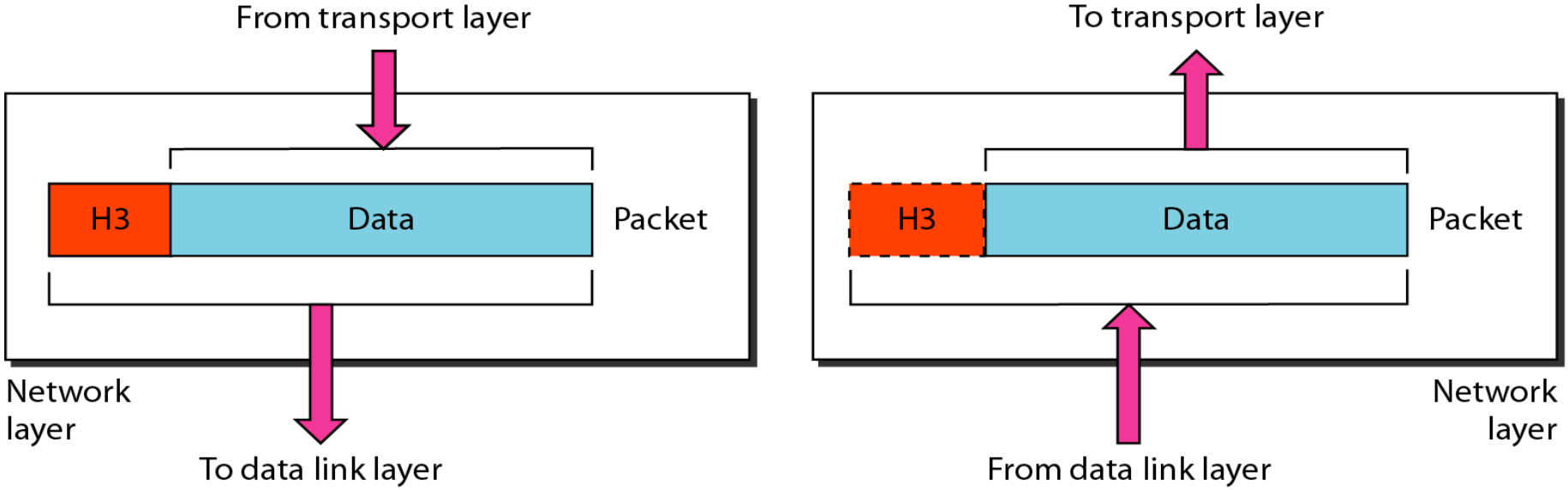

- The network layer is responsible for source to destination delivery of a packet over the single or multiple networks/nodes
- Network layer concern about
  - **Logical Addressing**-handles the packets transmission by including the logical address of the sender and receiver
  - **Routing**-For a interconnected network, routers or switches route the packet to the destination

Note

The network layer is responsible for the delivery of individual packets from the source host to the destination host.

Figure 2.9 *Source-to-destination delivery*

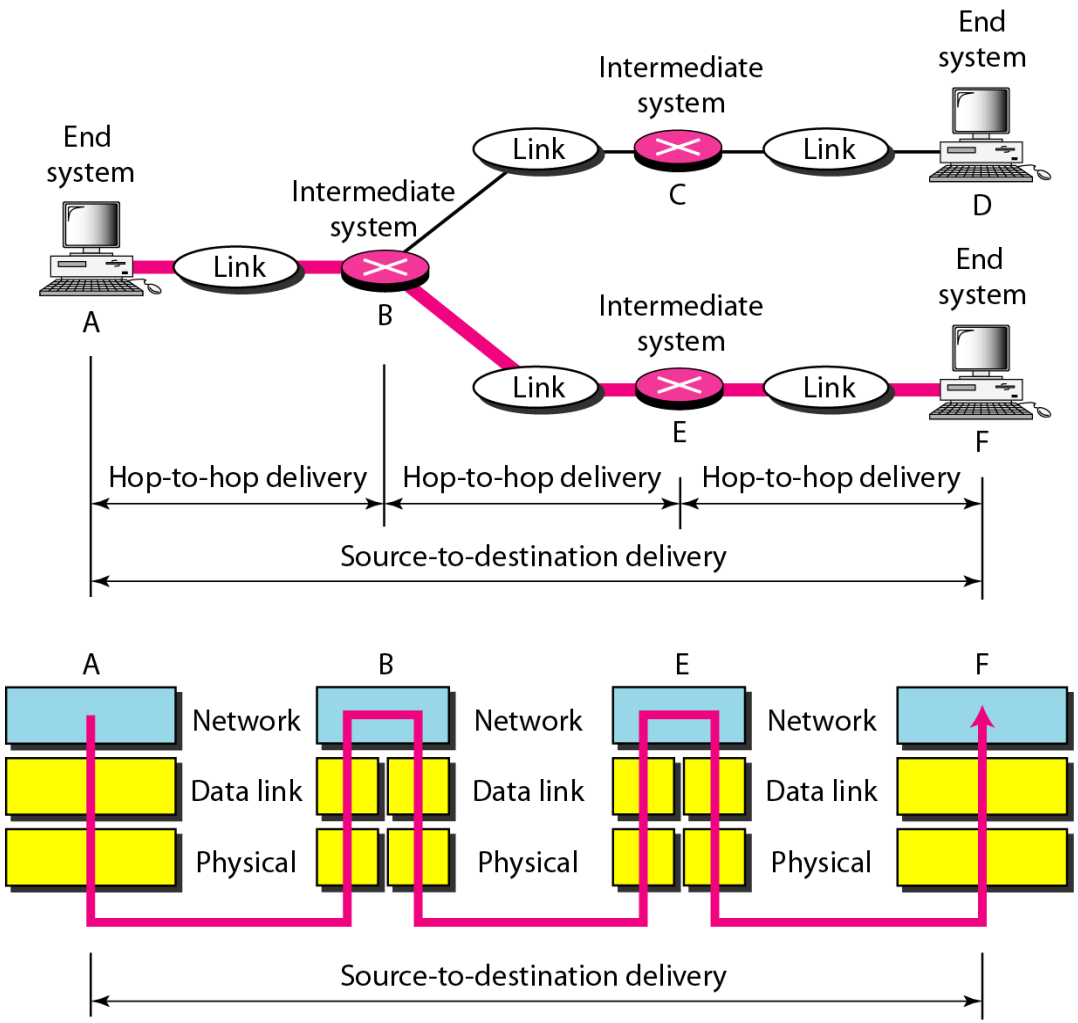

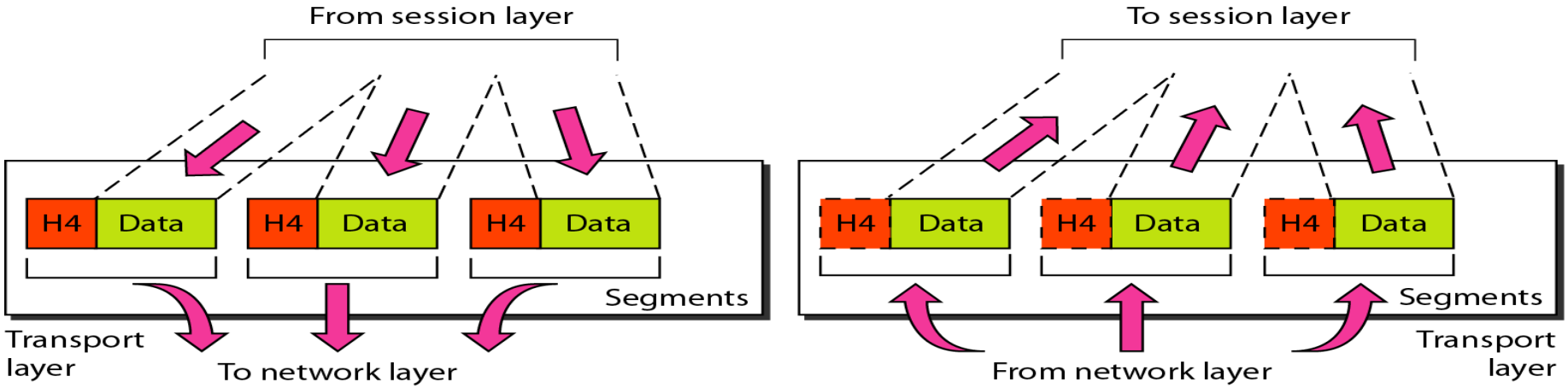

Figure 2.10 ***Transport layer***

- The transport layer is responsible for the delivery of a message from one process to another
- Transport layer concern about
  - **Service point addressing-** transport layer header includes service point address or port address to deliver entire message to the correct process. Ex. 67,68 used for DHCP, 80,80 used for HTTP
  - **Segmentation and reassembly-** The segmented message contain a sequence number and reassemble at the destination or identify the lost segments
  - **Connection control-** Connectionless or connection oriented communication
  - **Flow control-** Apply flow control mechanism for end to end communication rather than single link
  - **Error control-** Error control using mechanism from process to process. Error correction using retransmission

Note

The transport layer is responsible for the delivery of a segment from one process to another.

Figure 2.12 *Session layer*

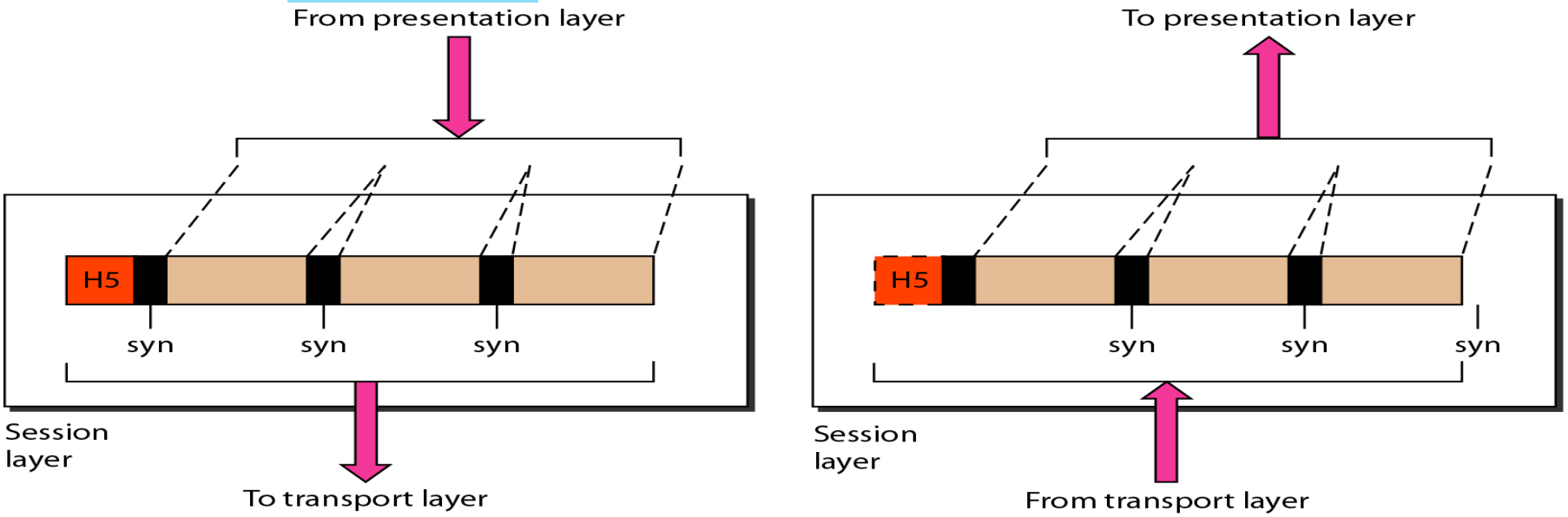

- The session layer is responsible for network dialog controller
- It establishes, maintains, and synchronizes the interaction among communicating systems
- Session layer concern about
  - **Dialog control-** It allows communication between two process to decide either half-duplex or full duplex mode
  - **Synchronization-** Allows a process to add checkpoints or synchronization points, that check every checkpoints that the transmission is completed and acknowledged.

Note

The session layer is responsible for dialog control and synchronization.

Figure 2.13 *Presentation layer*

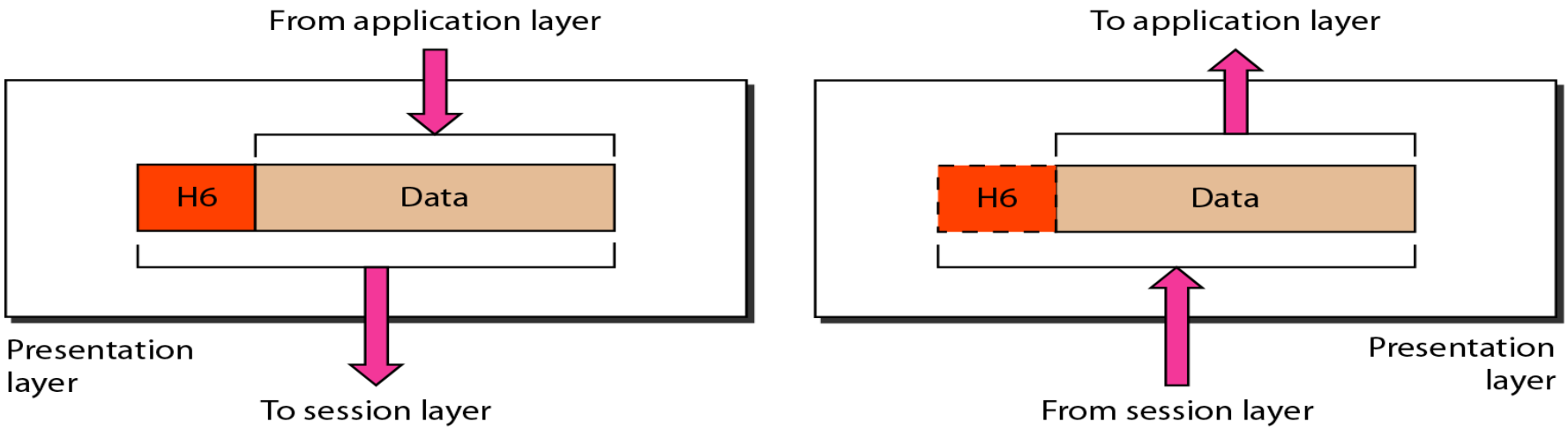

- The presentation layer is responsible for syntax and semantics of the information exchanged between two system.
- Presentation layer concern about
  - **Translation-** Exchange information in the form of character string, numbers and so on. Due to use different encoding system, the presentation layer provides interoperability between these encoding system and present information in correct manner
  - **Encryption-** Encrypt the sending information and decrypt in the receiver side to regenerate the original information is responsible by presentation layer
  - **Compression-** Data compression reduces the number of bits and faster the transmission usually happens in multimedia transmission

Note

The presentation layer is responsible for translation, compression, and encryption.

Figure 2.14 *Application layer*

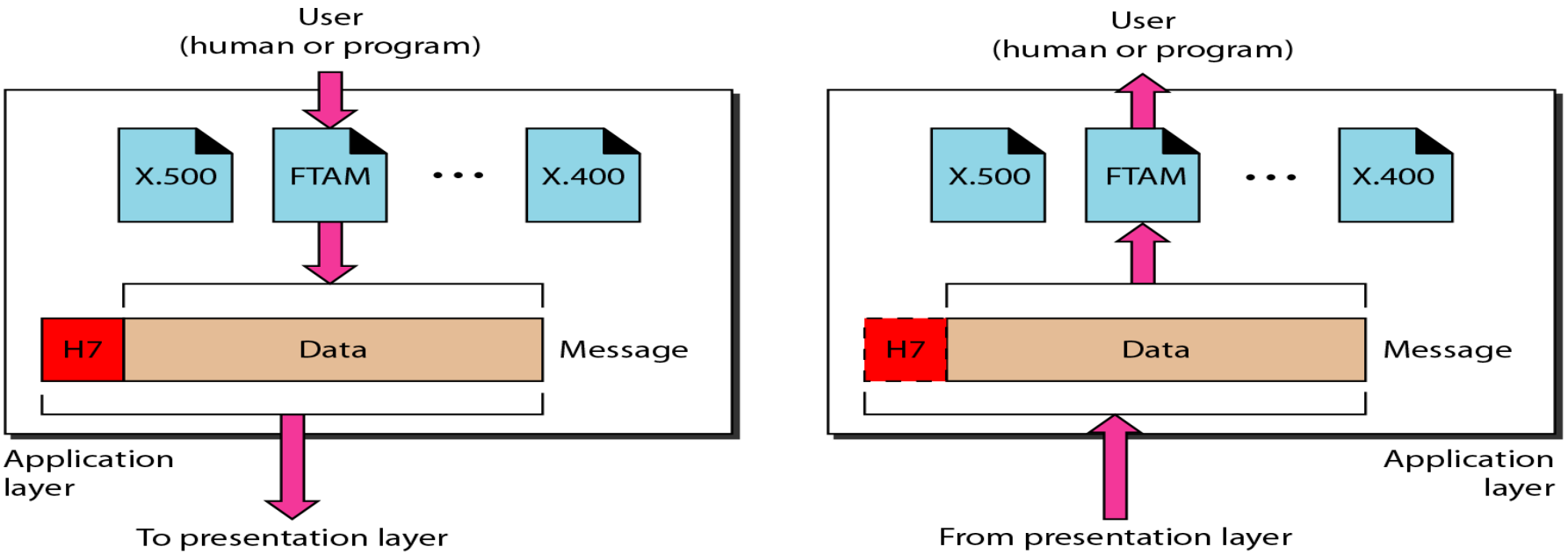

- Application layer concern about
  - **Network virtual terminal-** Provide network virtual terminal to remotely login and access some task it allows for the uses
  - **File transfer, Access, and management-** Allows a user to access a file locally or remotely, as well as transfer and manage the files
  - **Mail service-** Provides service for email forwarding and storage
  - **Directory Service-**Provides distributed database source and access for service for the directories locally or globally.

Note

The application layer is responsible for providing services to the user.

Figure 2.15 *Summary of layers*

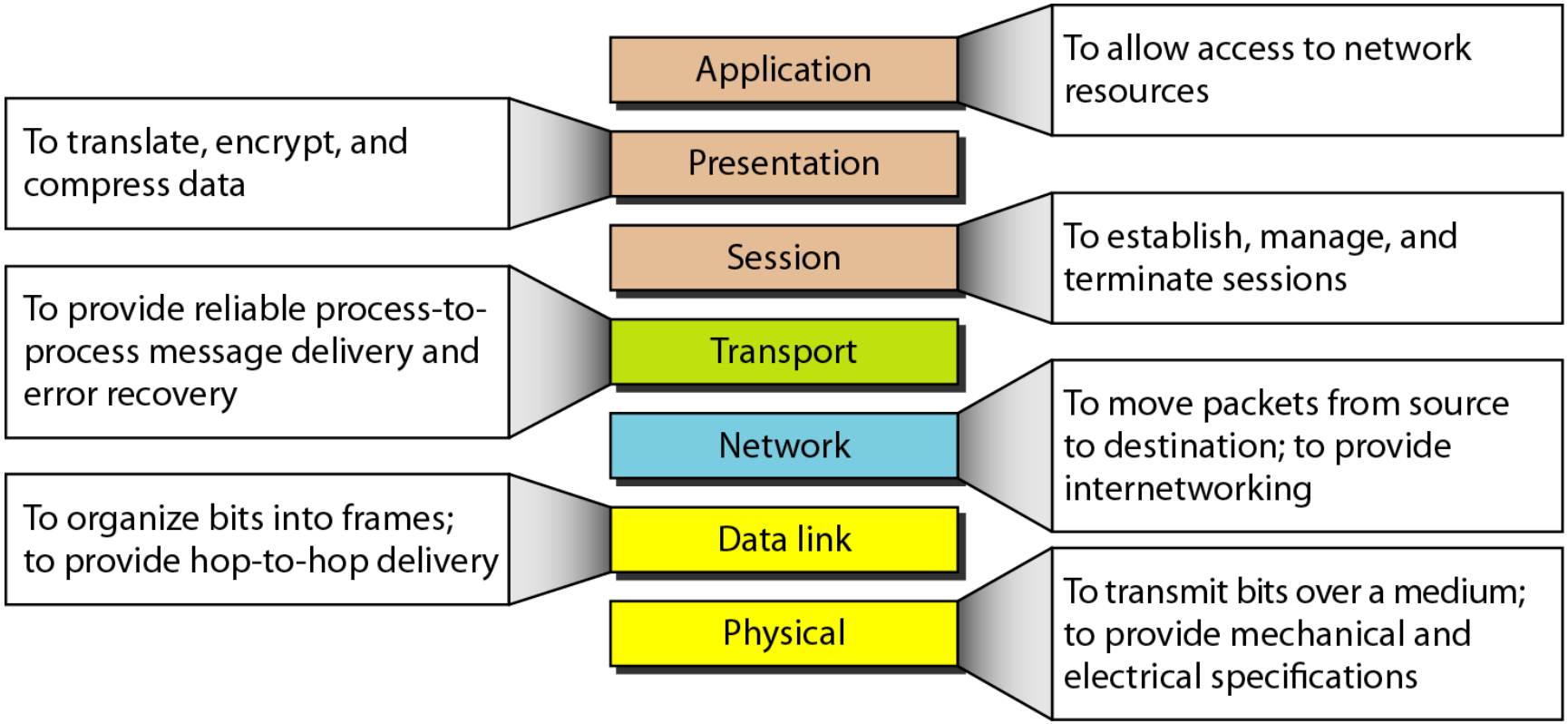

2-4 TCP/IP PROTOCOL SUITE

- ***The layers in the TCP/IP protocol suite do not exactly match those in the OSI model.***
- ***The original TCP/IP protocol suite was defined as having four layers: host-to-network, internet, transport, and application.***
- ***However, when TCP/IP is compared to OSI, we can say that the TCP/IP protocol suite is made of five layers: physical, data link, network, transport, and application.***

The TCP/IP Reference Model

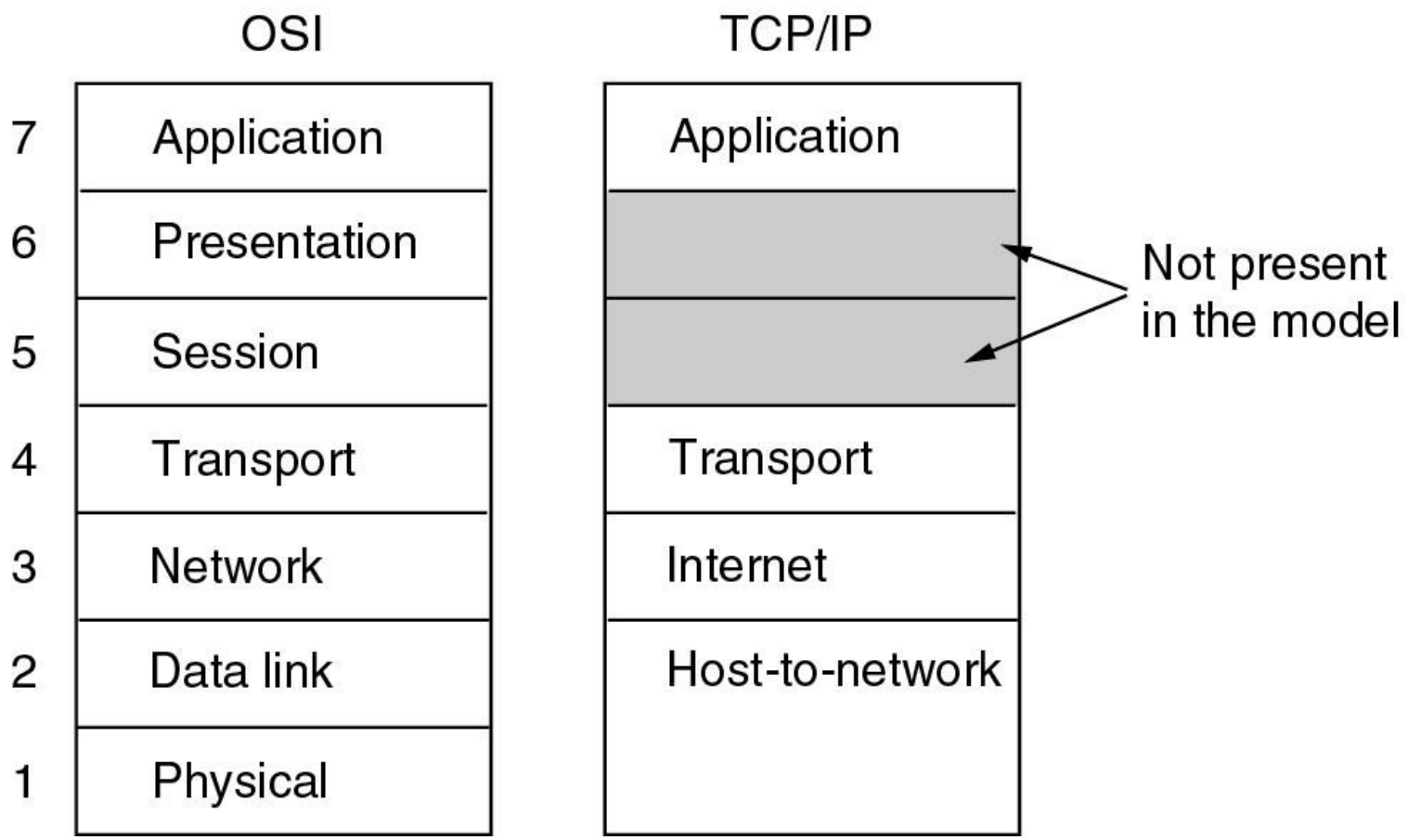

- The TCP/IP reference model.

The TCP/IP Reference Model

- The TCP/IP reference model developed prior to the OSI model(1982 where ISO/OSI was 1984).
- **Host-to-network layer-** This layer responsible for
  - Handles the physical infrastructure covers ethernet cable, wireless networks, NIC card, and device to driver intercommunication
  - Also handles technical infrastructure as conversion from digital to analog signal and vice-versa.
  - does not define any specific protocols and lan and wan can be network example
  - Handles also
    - Bit synchronization
    - Transmission
    - Flow control
    - Error control

The TCP/IP Reference Model

- **Internet/network layer-** This layer responsible for
  - Controls the flow and routing of traffic of data and ensure data delivery
  - Reassembling the data packets into destination
  - Ensure internetworking
- **Transport layer-**This layer responsible for
  - Reliable end-to-end data connection/transmission
  - Checking errors and make corrections in process to process communication

The TCP/IP Reference Model

- **Application layer-**This layer responsible for
  - Combined with session, presentation, and application layer
  - To allow access to network and its resources
  - Allow users to use emails, applications, communication and cloud storage apps

Figure 2.16 *TCP/IP and OSI model*

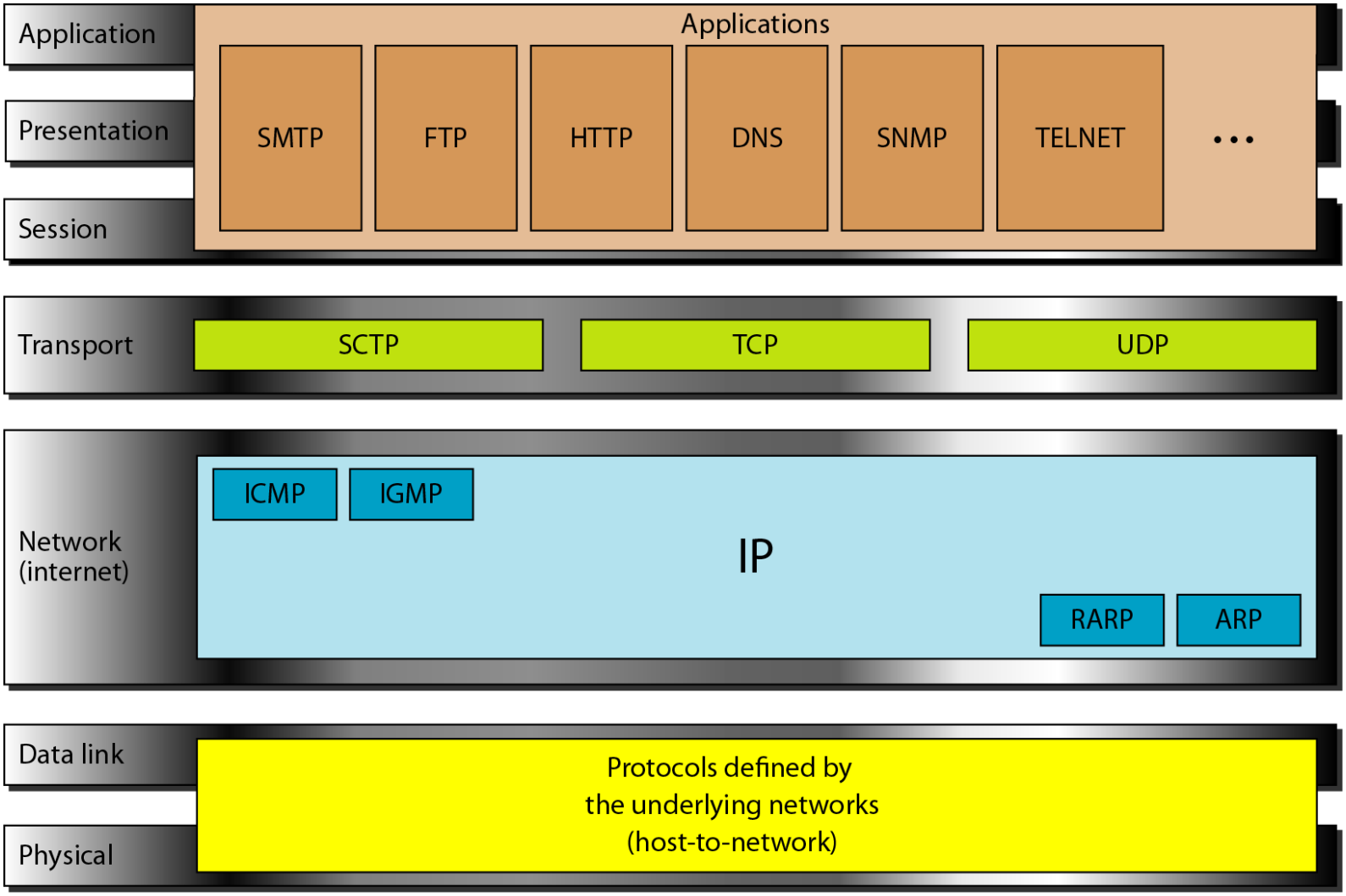

Full Forms: *TCP/IP and OSI model*

- SMTP – Simple Mail Transfer Protocol
- FTP – File Transfer Protocol
- HTTP – Hyper Text Transfer Protocol
- DNS – Domain Name Server
- SNMP – Simple Network Management Protocol
- SCTP - Stream Control Transmission Protocol
- TCP – Transmission Control Protocol
- UDP – User Datagram Protocol
- ARP - Address Resolution Protocol
- RARP - Reverse Address Resolution Protocol
- ICMP - Internet Control Message Protocol
- IGMP - Internet Group Management Protocol
- IP – Internet Protocol

VVI

TCP/IP v/s OSI

- 4 Layers
- In 1982, the TCP/IP model became the standard language of ARPANET
- Did not clearly distinguish between service, interface and protocol.

- 7 Layers
- In 1984, the OSI model was introduced by the International Organisation of Standardization (ISO)
- Distinction between these three concepts are explicit.

- Protocols in TCP/IP model are not hidden and tough to replace if technology changes.
- The protocols came first, and the model was really just a description of the existing protocols.
- Protocol dependent

- Protocols in the OSI model are better hidden than in the TCP/IP model and can be replaced relatively easily as the technology changes.
- The model was not biased toward one particular set of protocols, a fact that made it quite general.
- Protocol independent

2-5 ADDRESSING

Four levels of addresses are used in an internet employing the TCP/IP protocols: physical, logical, port, and specific.

Topics discussed in this section:

Physical Addresses
Logical Addresses
Port Addresses
Specific Addresses

Figure 2.17 *Addresses in TCP/IP*

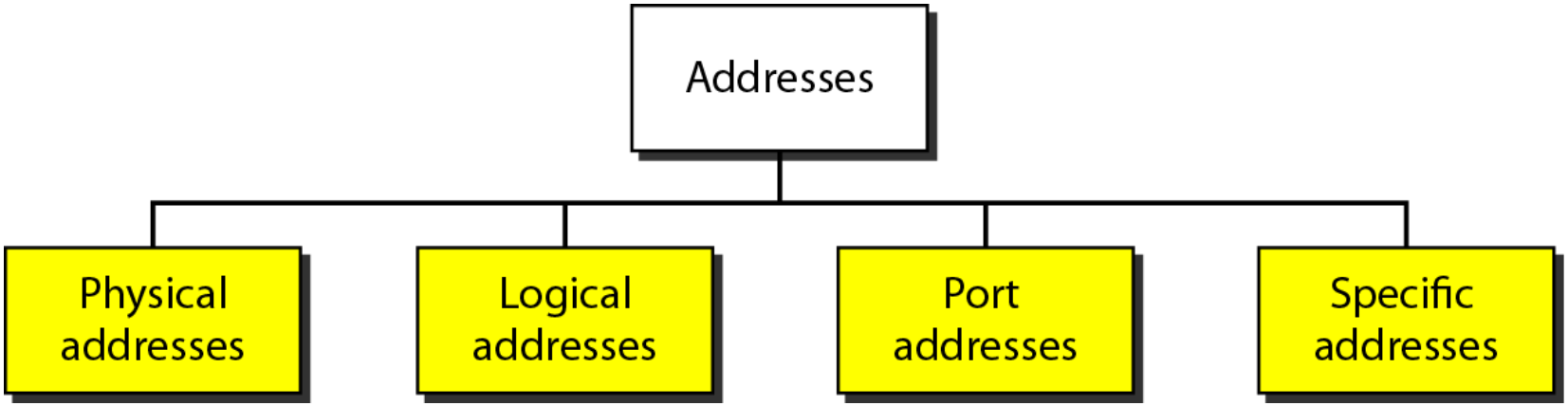

Figure 2.18 *Relationship of layers and addresses in TCP/IP*

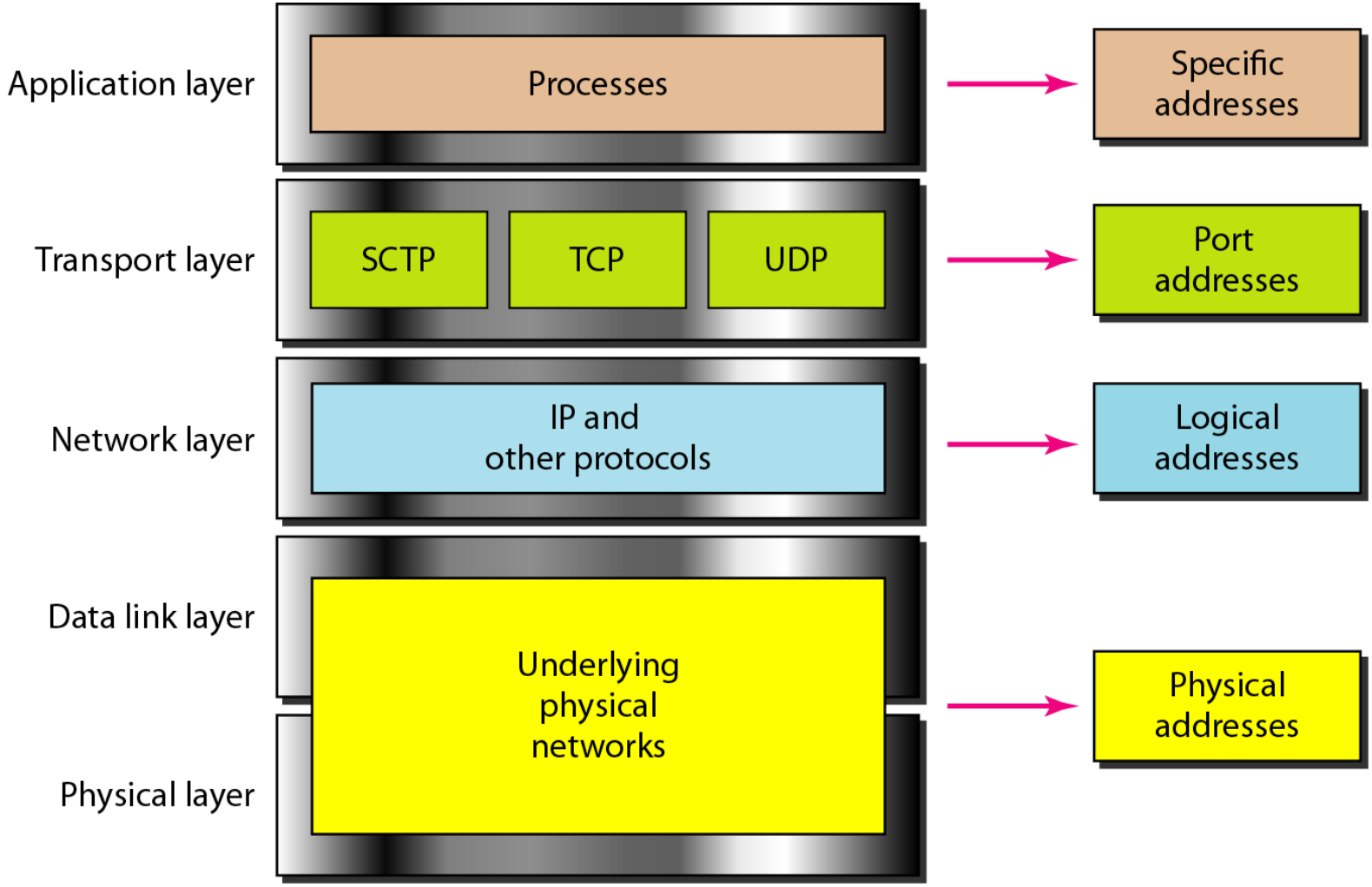

Physical Address

The most local-area networks use a 48-bit (6-byte) physical address written as 12 hexadecimal digits; every byte (2 hexadecimal digits) is separated by a colon, as shown below:

07:01:02:01:2C:4B

A 6-byte (12 hexadecimal digits) physical address.

Example 2.1

In Figure 2.19 a node with physical address 10 sends a frame to a node with physical address 87. The two nodes are connected by a link (bus topology LAN). As the figure shows, the computer with physical address 10 is the sender, and the computer with physical address 87 is the receiver.

Figure 2.19 *Physical addresses*

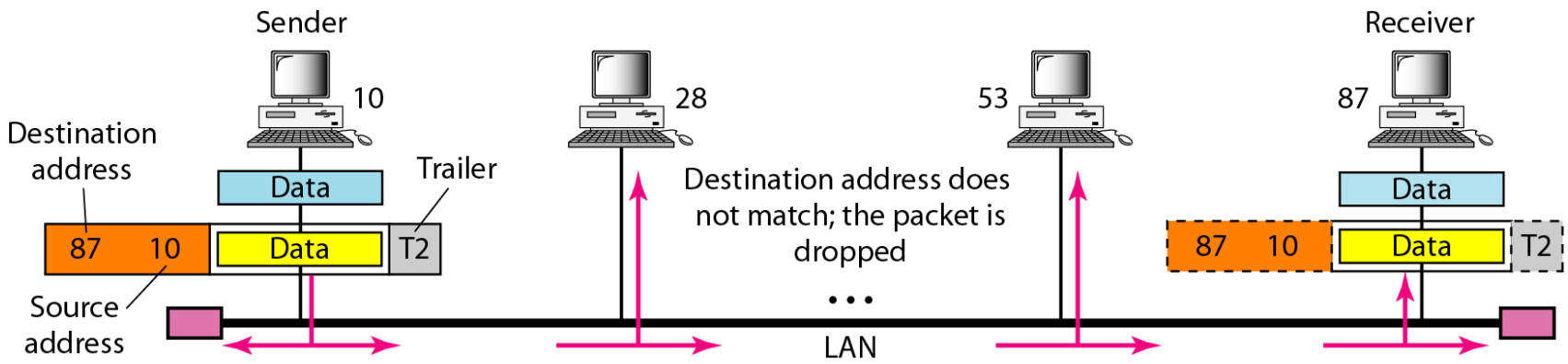

Logical Address

- Logical address are necessary for universal communication
- A logical address is a 32-bit address (IPv4) that uniquely define a host
- Impossible to be the same IP address of multiple devices

192.168.16.1

A 4-byte (32-bit decimal digits) logical address.

Example 2.3

Figure 2.20 shows a part of an internet with two routers connecting three LANs. Each device (computer or router) has a pair of addresses (logical and physical) for each connection. In this case, each computer is connected to only one link and therefore has only one pair of addresses. Each router, however, is connected to three networks (only two are shown in the figure). So each router has three pairs of addresses, one for each connection.

Figure 2.20 *IP addresses*

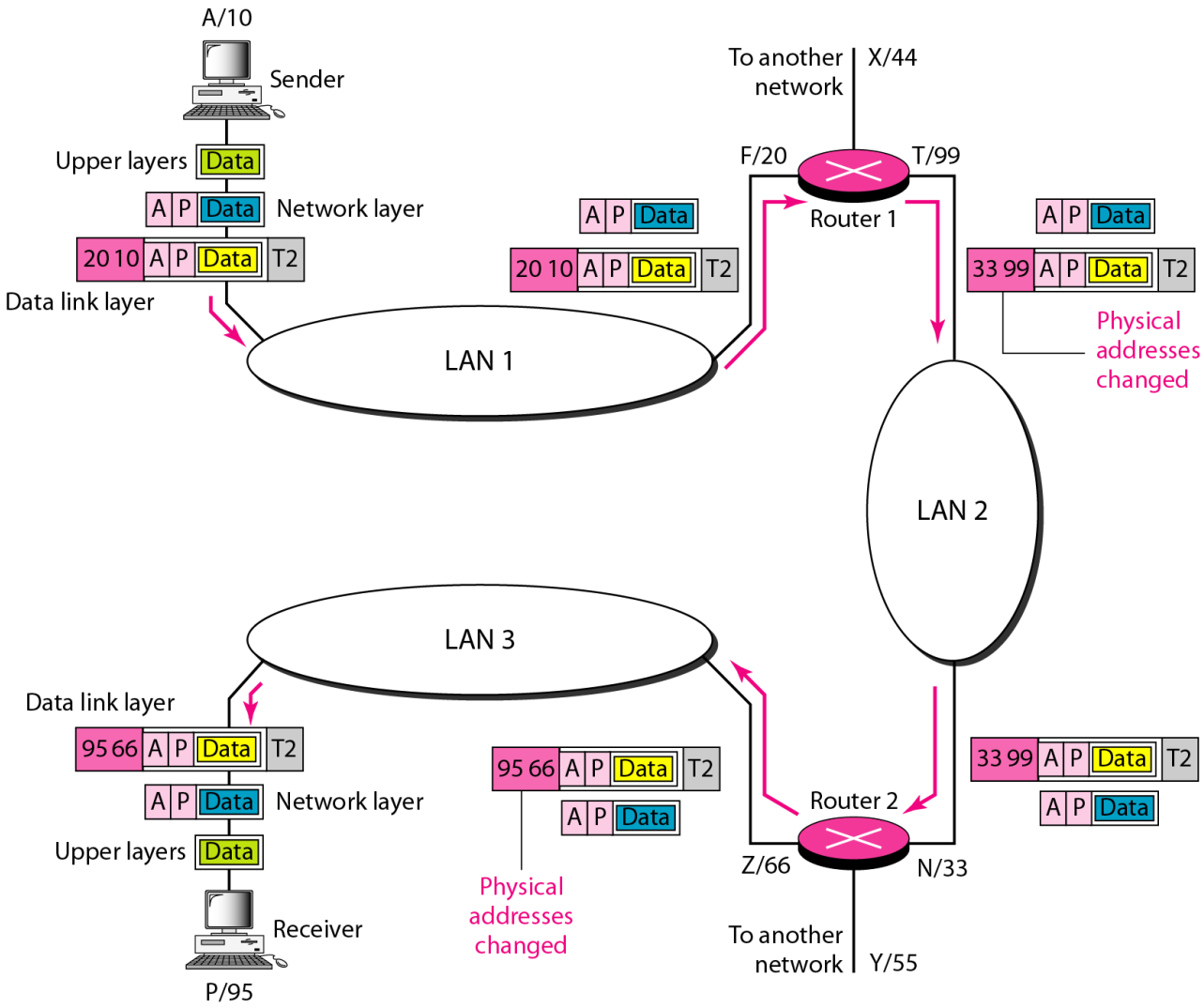

Note

The physical addresses will change from hop to hop, but the logical addresses usually remain the same.

Port Address

a port address is a 16-bit address represented by one decimal number as shown.

753- tcp/udp

A 16-bit port address represented as one single number.

Example 2.4

Figure 2.21 shows two computers communicating via the Internet. The sending computer is running three processes at this time with port addresses a, b, and c. The receiving computer is running two processes at this time with port addresses j and k. Process a in the sending computer needs to communicate with process j in the receiving computer. Note that although physical addresses change from hop to hop, logical and port addresses remain the same from the source to destination.

Figure 2.21 *Port addresses*

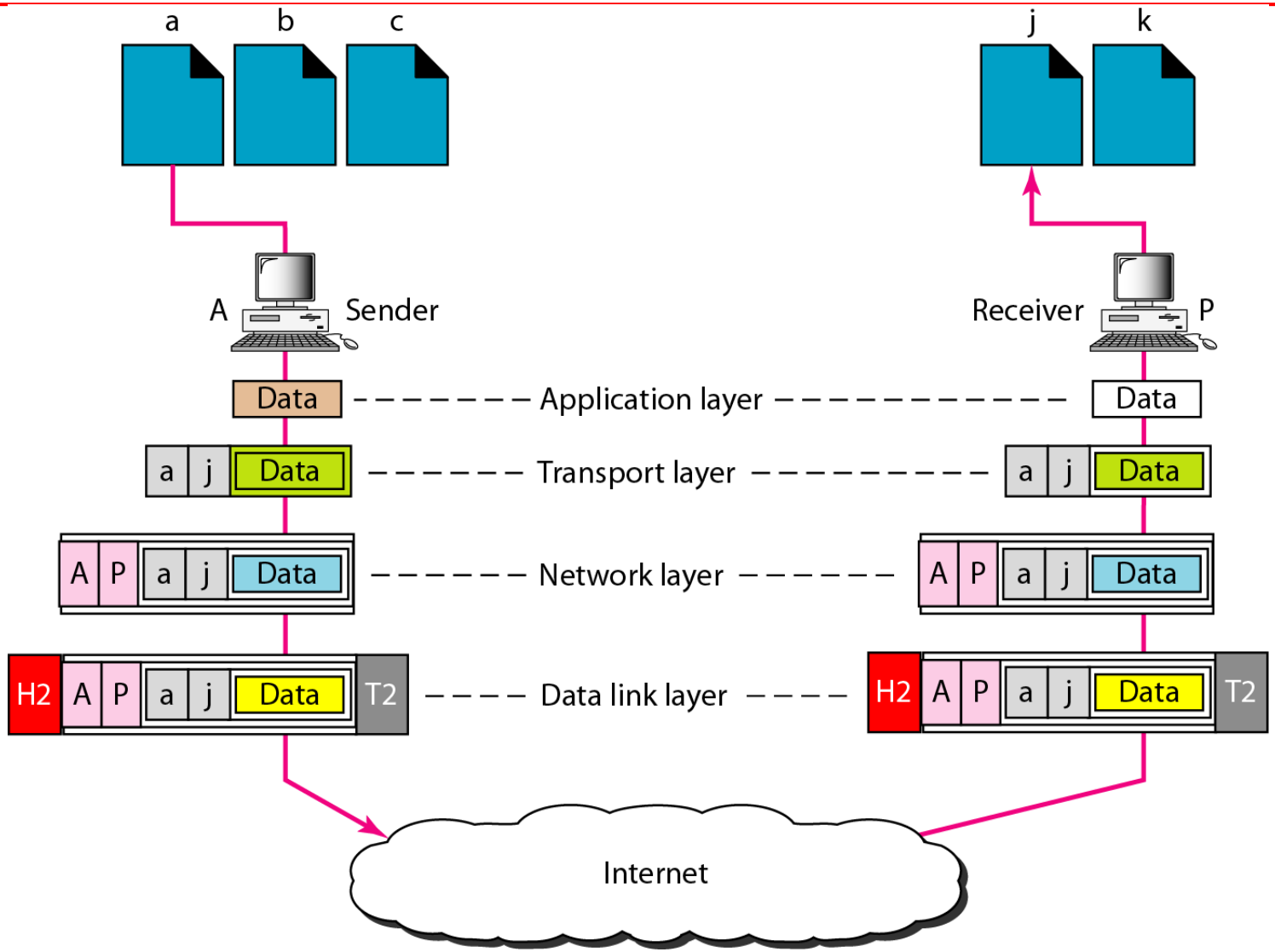

Note

The physical addresses change from hop to hop, but the logical and port addresses usually remain the same.

Specific Address

a user-friendly address designed for some specific application as

Email- abir.hossain@mbstu.ac.bd
URL- www.mbstu.ac.bd
ftp: ftp://198.133.219.25:21

Thank You