CPE314 Data Communication and Computer Networks

Lecture 10: Switching

Dr. Zaid Ahmad

Department of Computer Engineering
COMSATS University Islamabad, Lahore Campus

Lecture Agenda

1. Introduction to Switching
2. Switching in TCP/IP Layers
3. Circuit Switching
4. Packet Switching
5. Virtual-Circuit Switching
6. Summary

What is Switching?

Definition

Switching is a technique used to connect multiple devices efficiently by creating temporary communication paths.

- Direct connections (mesh/star) are inefficient for large networks
- Switching reduces infrastructure cost
- Enables scalable communication

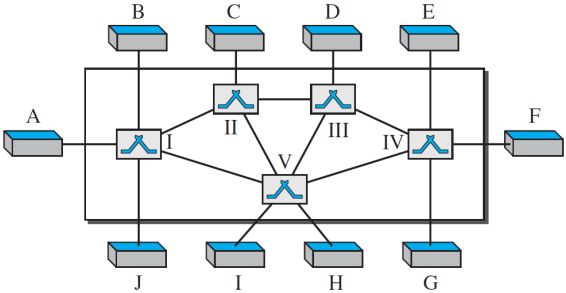

Switching Methods

- Circuit Switching
- Packet Switching
  - Datagram Approach
  - Virtual-Circuit Approach
- Message Switching (obsolete)

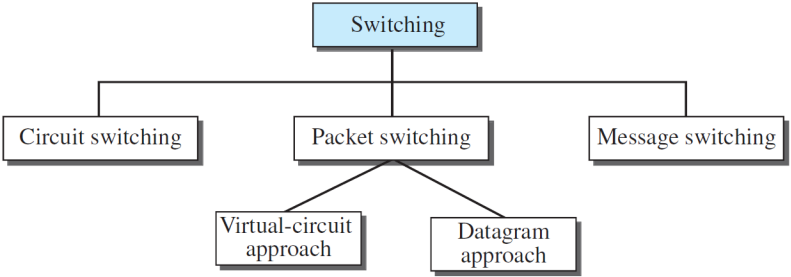

Switching Across TCP/IP Layers

- **Physical Layer:** Circuit Switching
- **Data-Link Layer:** Packet Switching (Frames, VC)
- **Network Layer:** Packet Switching (Datagram/VC)
- **Application Layer:** Message Switching

Key Insight

Different switching techniques operate at different layers of the TCP/IP stack.

Circuit-Switched Networks

Definition

A circuit-switched network establishes a dedicated path between two devices before communication.

- Uses FDM or TDM
- Dedicated channel per connection
- Continuous data flow (no packets)

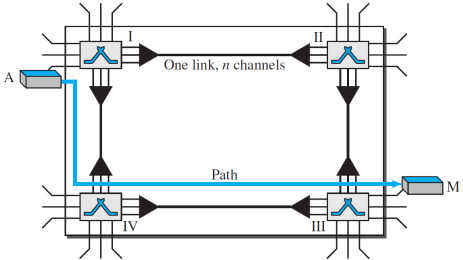

Phases of Circuit Switching

- **Setup Phase**
- **Data Transfer Phase**
- **Teardown Phase**

Important

Resources remain reserved for the entire duration of communication.

Circuit Switching Characteristics

- Works at physical layer
- No packetization
- No addressing during transmission
- Dedicated bandwidth

Circuit Switching Examples

- Telephone network (FDM)
- Private company network (TDM)

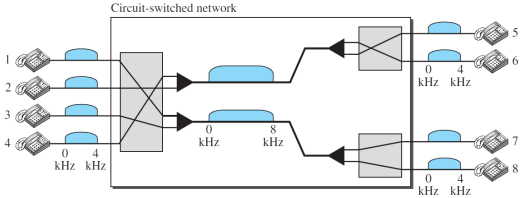

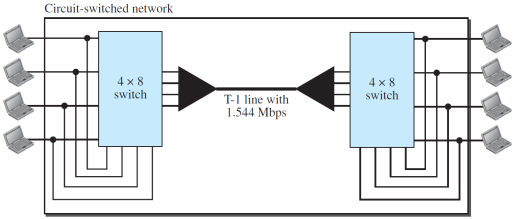

Efficiency and Delay

Efficiency

Low (resources reserved even when idle)

Delay

- Setup delay
- Minimal delay during transmission

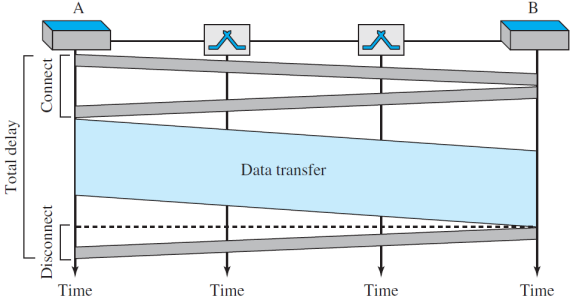

Packet Switching

Definition

Messages are divided into packets and transmitted independently.

- No resource reservation
- First-come, first-served
- Possible delays due to congestion

Datagram Networks

- Each packet is independent
- May take different paths
- Packets may arrive out of order
- No setup or teardown

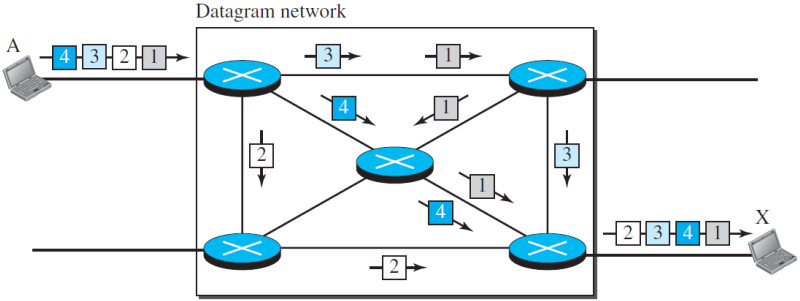

Routing in Datagram Networks

- Each switch uses a routing table
- Based on destination address
- Dynamic updates

Key Point

Destination address remains unchanged throughout transmission.

Delay in Datagram Networks

Total Delay

$$\text{Total Delay} = 3T + 3\tau + w_1 + w_2$$

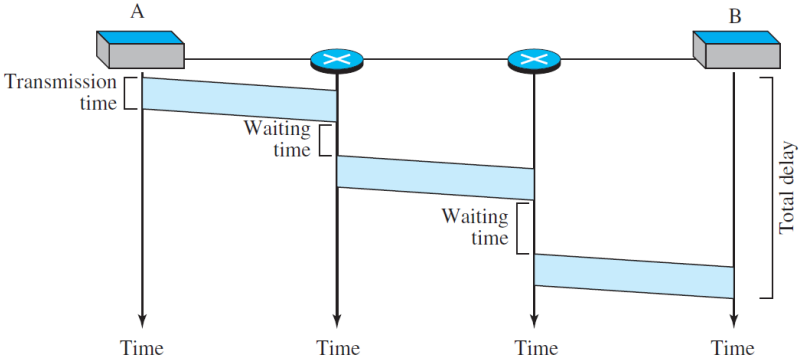

Virtual-Circuit Networks

Definition

A hybrid approach combining circuit and packet switching.

- Setup + Data + Teardown
- Packets follow same path
- Uses VC identifiers (VCI)

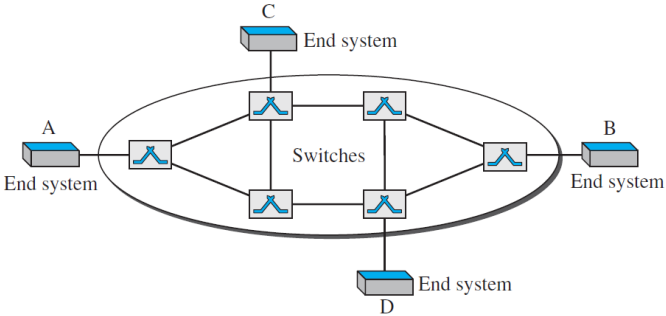

VCI Concept

- Local identifier at each switch
- Changes at every hop

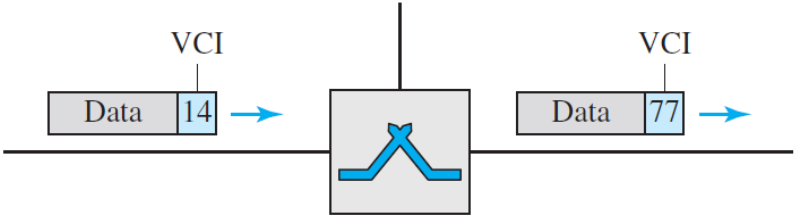

Data Transfer in VC Networks

- Switch uses table lookup
- Updates VCI and forwards packet

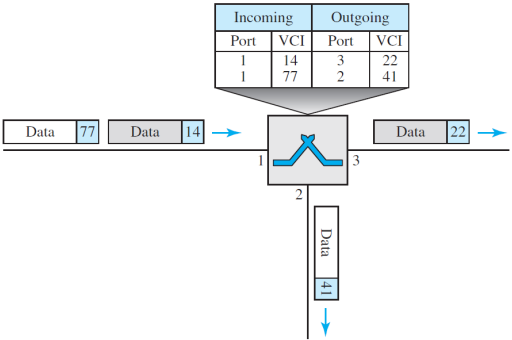

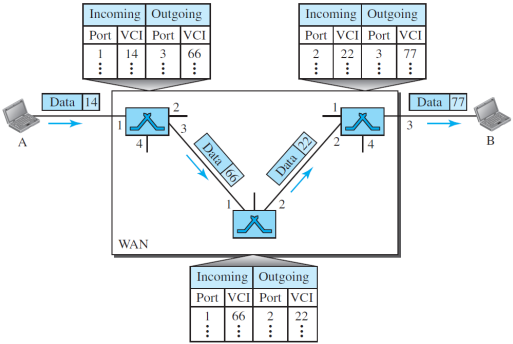

Setup and Acknowledgment

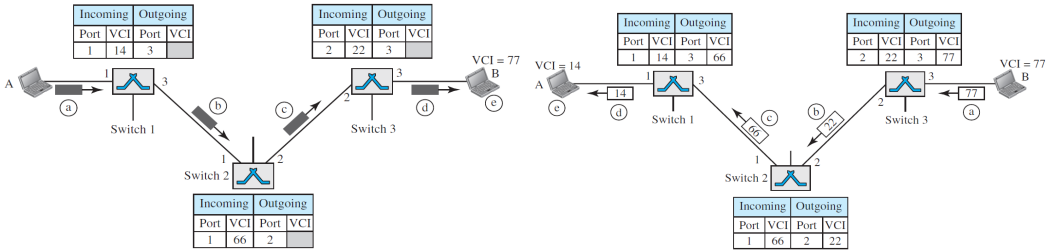

Teardown and Efficiency

- Connection is released after transmission
- Can reserve resources or allocate on demand

Advantage

Predictable path for all packets

Delay in Virtual-Circuit Networks

Total Delay

$$\text{Total Delay} = 3T + 3\tau + \text{Setup} + \text{Teardown}$$

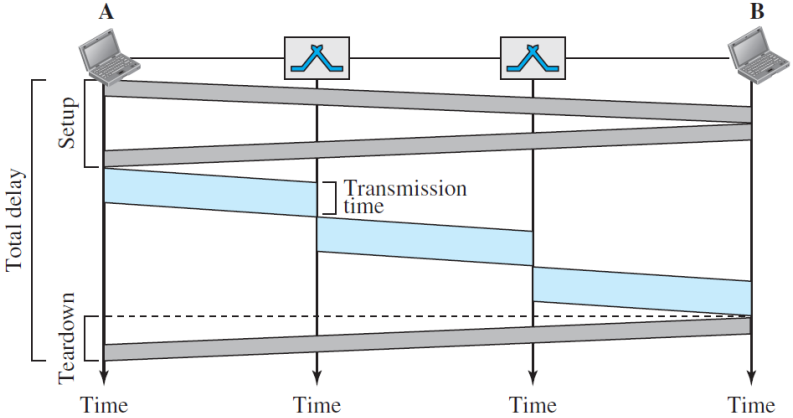

Comparison of Switching Techniques

Feature	Circuit	Datagram	Virtual Circuit
Setup Phase	Yes	No	Yes
Path	Fixed	Dynamic	Fixed
Delay	Low	Variable	Moderate
Efficiency	Low	High	Moderate

Summary

- Switching enables scalable communication
- Circuit switching provides dedicated paths
- Packet switching improves efficiency
- Virtual circuits combine advantages of both

Reference

B. A. Forouzan, *Data Communications and Networking*, 5th ed. New York, NY, USA: McGraw-Hill, 2013.