Data Communications & Networks

Chapter 8: Sections 8.2 & 8.3

Circuit-Switched Networks & Packet Switching

Topics Covered:

- 8.1 Introduction to Switching
- 8.2 Circuit-Switched Networks (3 Phases, Efficiency, Delay)
- 8.3 Packet Switching: Datagram & Virtual-Circuit Networks

Reference: Forouzan, "Data Communications and Networking," 5th ed.

April 11, 2026

Contents

1 Introduction to Switching **2**
1.1 Three Methods of Switching 2

2 Circuit-Switched Networks — Section 8.2 **3**
2.1 Three Phases of Circuit Switching 3
2.1.1 Phase 1: Connection Setup (Signaling) 4
2.1.2 Phase 2: Data Transfer 4
2.1.3 Phase 3: Teardown 4
2.2 Efficiency of Circuit Switching 5
2.3 Delay in Circuit-Switched Networks 6

3 Packet Switching — Section 8.3 **7**
3.1 Datagram Networks 7
3.1.1 How Datagram Networks Work 7
3.1.2 Routing Table in Datagram Networks 8
3.1.3 Delay in Datagram Networks 8
3.2 Virtual-Circuit Networks 9
3.2.1 The Hybrid Approach 9
3.2.2 Three Phases of Virtual-Circuit Networks 10
3.2.3 Delay in Virtual-Circuit Networks 10
3.3 Comparison: All Three Switching Methods 11

Chapter 1 Introduction to Switching

Why Switching?

Imagine connecting every pair of computers in the world directly to each other with a dedicated wire. With $n = 7$ billion people, you'd need $\frac{n(n-1)}{2} \approx 2.45 \times 10^{19}$ wires — physically impossible!

Switching is the solution. Instead of a direct wire between every pair, we have a network of intermediate **switches**. A message is routed from source to destination through these switches.

A switched network:

- Consists of **switches** (routers, telephone exchange offices) connected by **links**.
- **End systems** (computers, phones) connect to switches.
- Data travels from source to destination via a path through multiple switches.

1.1 Three Methods of Switching

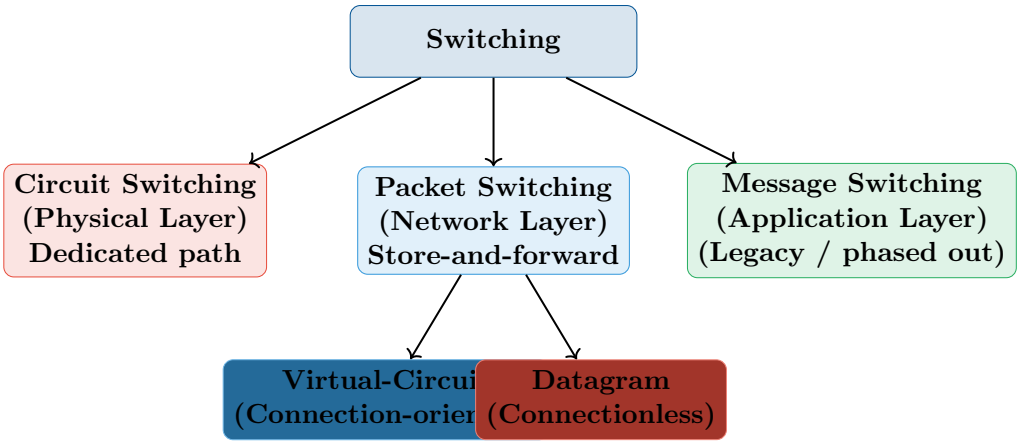

Chapter 2 Circuit-Switched Networks — Section 8.2

Circuit Switching: The Dedicated Highway

In circuit switching, before any data is transferred, a **dedicated path** (circuit) is established *end-to-end* between sender and receiver. This path remains reserved for the entire duration of the communication — even during silent periods.
Think of it like this: Booking a private taxi from city A to city Z. The taxi waits for you at every stop, nobody else can use it, and you have a guaranteed smooth ride.
Key characteristics:

- **Dedicated resources**: Bandwidth, switch buffers, processing time — all reserved for you.
- **Continuous flow**: Data flows as a stream, not packets. No packetization!
- **No addressing during transfer**: Once the circuit is set up, switches just forward the signal based on its time slot (TDM) or frequency band (FDM) — no address lookup needed!
- **Happens at physical layer**: Signals are simply routed, not processed.

2.1 Three Phases of Circuit Switching

Every circuit-switched communication requires **three distinct phases**:

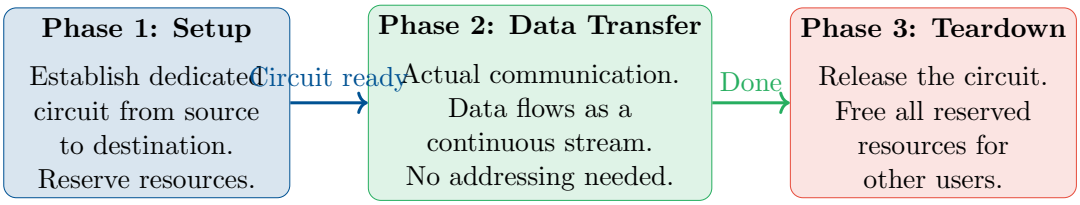

2.1.1 Phase 1: Connection Setup (Signaling)

Setup Phase in Detail

1. Source end system sends a **setup request** message containing the destination address.
2. Each switch along the path receives the request, finds a free channel on its next link, **reserves it**, and forwards the request to the next switch.
3. Once the destination is reached, it sends an **acknowledgment (ACK)** back to the source.
4. Only after the ACK arrives at the source is the circuit considered established.
5. This involves **end-to-end addressing** (phone number, computer address).
6. During setup, each switch commits a dedicated channel (time slot in TDM, or frequency band in FDM) for this connection.

Important: During the setup phase, if any switch cannot allocate a channel, the connection is rejected (busy signal in telephone networks).

2.1.2 Phase 2: Data Transfer

Once the circuit is established:

- Data flows as a **continuous stream** (not packets).
- No routing decisions are made at intermediate switches. The path is fixed.
- No addressing in data frames. Switches forward based on physical channel allocation.
- Quality is **guaranteed**: fixed bandwidth, predictable delay, no competition.

2.1.3 Phase 3: Teardown

When communication ends:

- A disconnect signal is sent through the network.
- Each switch on the path **frees the reserved channel**.
- Resources become available for other connections.

2.2 Efficiency of Circuit Switching

Why Circuit Switching is Inefficient

The fundamental problem: **resources are reserved whether or not data is being sent**.
Consider a phone call:

- You speak for 30% of the call; the rest is silence (listening, pausing).
- During the 70% silence, the circuit is still fully reserved — nobody else can use it.
- This wastes valuable bandwidth.

In contrast, computer communication is extremely **bursty**: a web page request takes microseconds, then nothing for several seconds. A dedicated circuit during those idle seconds is completely wasteful.

Example 8.1: Simple Circuit-Switched Network for Telephone

Given: 8 telephones in a small area. Each telephone call uses a 4-kHz voice channel. Each link supports a maximum of 2 voice channels (using FDM). So each link has bandwidth $= 2 \times 4 = 8$ kHz.
Connections made:

- Phone 1 $\leftrightarrow$ Phone 7
- Phone 2 $\leftrightarrow$ Phone 5
- Phone 3 $\leftrightarrow$ Phone 8
- Phone 4 $\leftrightarrow$ Phone 6

Each connection uses one 4-kHz channel on each link it traverses. The switch controls which channel goes to which phone. When calls end, channels are released.
Key observation: If phones 1 and 7 hang up but phones 2 and 5 continue calling, the channels used by phones 1 and 7 become available for new calls — this is teardown in action.

Example 8.2: Company's Private Circuit-Switched Network

Given: A company has two offices connected by a T-1 line (1.544 Mbps). Each office has a 4×8 switch (4 inputs, 8 outputs). 4 output ports are looped back (internal communication); 4 output ports are for inter-office communication.
Design:

- Internal calls: Computers in the same office communicate through the 4 loopback ports.
- Inter-office calls: Use the T-1 line. With TDM, the T-1 can carry up to 24 voice channels or equivalent data channels between the two offices.

This is exactly how enterprise PBX (Private Branch Exchange) systems work!

2.3 Delay in Circuit-Switched Networks

Delay Analysis: Three Parts

Total delay in a circuit-switched network = Setup delay + Data transfer delay + Teardown delay.

Setup delay has 4 parts:

1. *Propagation time* of setup request (source → destination).
2. *Transfer time* for the setup request itself.
3. *Propagation time* of acknowledgment (destination → source).
4. *Transfer time* for the acknowledgment.

Data transfer delay has 2 parts:

1. *Transmission time*: Time to put all the data bits onto the wire.
2. *Propagation time*: Time for the signal to travel from source to destination.

No queuing delay at intermediate switches: the path is dedicated, so data never waits! This is the key advantage of circuit switching for real-time applications like voice calls.

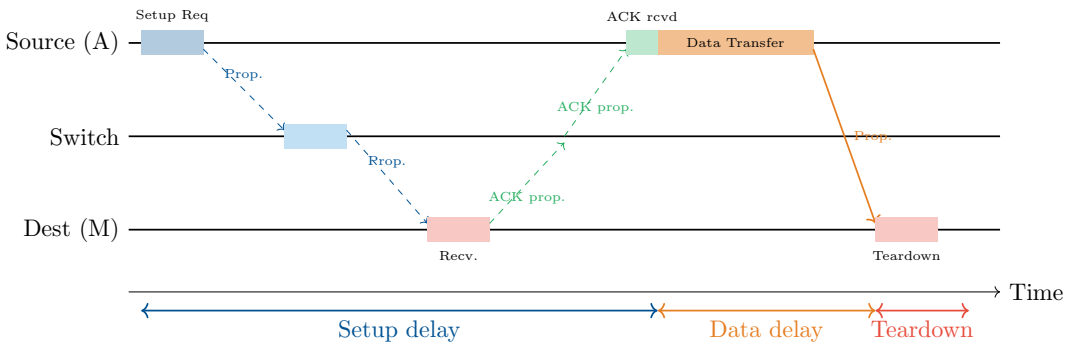

Chapter 3 Packet Switching — Section 8.3

Packet Switching: The Shared Road

Instead of a dedicated circuit, **packet switching** divides data into small chunks called **packets**. Each packet is sent independently and can take *any path* through the network.
The key revolution:

- No resources are pre-allocated. Packets share the network.
- Each packet carries **addressing information** (destination address in header).
- Switches (routers) make **routing decisions independently** for each packet.
- This is how the **Internet** works today!

Why "Store-and-Forward"? Each intermediate router must:

1. Receive (store) the entire packet.
2. Check it for errors.
3. Look up the routing table to find the next hop.
4. Forward the packet toward the destination.

3.1 Datagram Networks

3.1.1 How Datagram Networks Work

Datagram Approach: Connectionless

In a **datagram network**:

- **No connection setup phase**. Packets are sent immediately.
- Each packet is treated **independently**. Every router makes its own routing decision.
- Packets from the same source to the same destination may take **different paths**.
- Packets may arrive **out of order**. The receiving end must reorder them.

- Routing tables at each router are **dynamic** and can change.

The Internet is a datagram network.

Datagram Network: Each packet routed independently

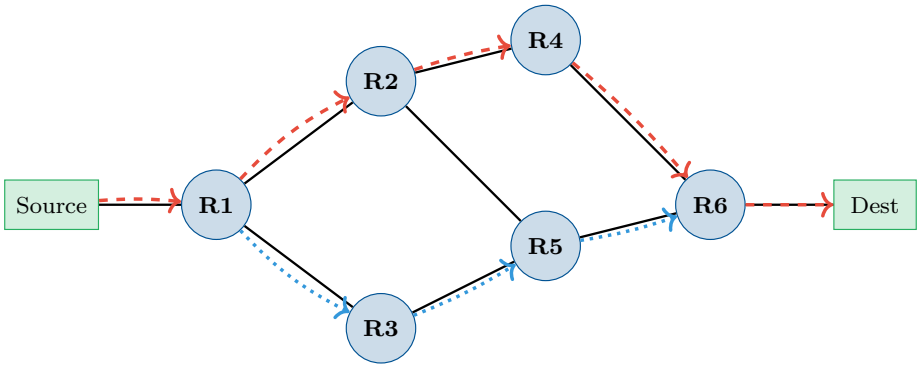

Red dashed = Packet 1 path, Blue dotted = Packet 2 path (different routes!)

3.1.2 Routing Table in Datagram Networks

Each router maintains a **routing table** that maps destination addresses to outgoing interfaces:

Destination Address	Output Interface (Next Hop)
A	Interface 1
B	Interface 2
C	Interface 1
D	Interface 3
⋮	⋮

Datagram routing tables change dynamically. When a link fails or becomes congested, routers update their tables. This is why the Internet can route around failures — packets just take a different path!

3.1.3 Delay in Datagram Networks

Datagram Network Delay

Total Delay = (number of links + 1) $\times t_{trans}$ + propagation delays + queuing delays

For k routers (switches) and packet size L bits on links of bandwidth B bps:

$$\text{Processing delay per router} = 1 \times t_{trans} = \frac{L}{B}$$

Note: Each router must receive the ENTIRE packet before forwarding it (store-and-forward). This adds one transmission delay per router!

Example P8.2: Datagram Delay Calculation

Given: A message of 1000 bits is divided into 5 datagrams of 200 bits each. Each datagram crosses 3 links (2 routers), each link at 100 kbps. Assume zero propagation delay.

Transmission time per datagram per link:

$$t_{trans} = \frac{200 \text{ bits}}{100{,}000 \text{ bps}} = 2 \text{ ms}$$

Path: Source → Router1 → Router2 → Destination = 3 links.
For a single datagram:

$$\text{Delay} = 3 \times 2 \text{ ms} = 6 \text{ ms (store-and-forward at each link)}$$

For all 5 datagrams (pipelining effect):
With pipelining, after the first datagram reaches the destination at $t = 6$ ms, each subsequent datagram arrives 2 ms later:

$$\text{Last datagram arrives at} = 6 + 4 \times 2 = \mathbf{14} \text{ ms}$$

Without pipelining (wait for all to finish first): $5 \times 3 \times 2 = 30$ ms. Pipelining is much faster!

3.2 Virtual-Circuit Networks

3.2.1 The Hybrid Approach

Virtual-Circuit Networks: Best of Both Worlds

A virtual-circuit network combines features of both circuit switching and datagram networks:

- **Like circuit switching**: A path is established *before* data is sent (setup phase). All packets follow this **same path** in order.
- **Like datagram (packet switching)**: Data is still divided into **packets** (not a continuous stream). Resources are **NOT dedicated** — they are shared with other virtual circuits.

Virtual circuit identifier (VCI):

- Instead of a destination address in each packet, packets carry a small **VCI number**.
- The VCI changes at each switch (it's locally significant, not global).

- Routing tables map VCI-in to VCI-out and output interface.
- Since no destination address lookup is needed per packet, switching is **faster** than datagrams.

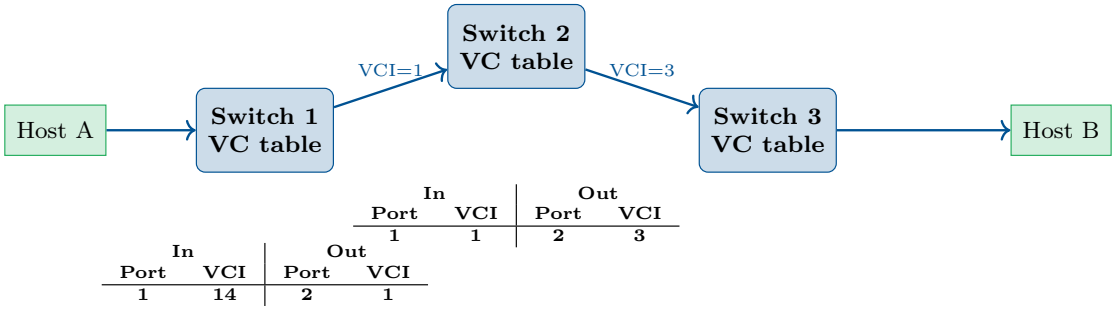

Virtual-Circuit: same path, VCI changes at each switch, packets go in order

3.2.2 Three Phases of Virtual-Circuit Networks

Like circuit switching, virtual-circuit networks have three phases:

Phase	Circuit Switching	Virtual Circuit	Datagram
Setup	Sets up circuit	Sets up VC path + VCI table	None
Data transfer	Continuous stream	Packets with VCI	Packets with dest. addr
Teardown	Releases resources	Removes VC entries	None

3.2.3 Delay in Virtual-Circuit Networks

Virtual-Circuit Delay

Virtual-circuit delay includes:

$$\text{Total Delay} = \underbrace{t_{setup}}_{\text{VC setup}} + \underbrace{k \times \frac{L}{B} + t_{prop}}_{\text{data transfer}} + \underbrace{t_{teardown}}_{\text{VC teardown}}$$

Key difference from datagrams:

- Virtual circuits have an **extra setup delay** that datagrams don't.
- But once the VC is set, routing is **faster** per packet (just look up VCI, not full address).
- For long communications with many packets, the VC setup overhead is amortized.

Example 8.1 (Circuit vs VC vs Datagram Delay)

Given: A message is 1000 bits. Sent over a network with 2 switches (3 links). Each link is 1 Mbps. Propagation delay per link = 1 ms. VC setup = 0.5 ms per switch.

Circuit switching delay:

$$t_{setup} \approx 2 \times (1 \text{ ms prop} + \text{small setup}) + \text{ACK} = \text{several ms}$$
$$t_{data} = \frac{1000}{1{,}000{,}000} \times 1 = 1 \text{ ms (transmission)} + 3 \text{ ms (3 links prop)} = 4 \text{ ms}$$

Datagram delay: (No setup; store-and-forward)

$$t_{data} = 3 \times \frac{1000}{1{,}000{,}000} + 3 \times 1 = 3 \text{ ms} + 3 \text{ ms} = \mathbf{6} \text{ ms}$$

Virtual circuit delay:

$$t_{setup} = 2 \times 0.5 = 1 \text{ ms (VC setup at 2 switches)}$$
$$t_{data} = 6 \text{ ms (same as datagram)}$$
$$\text{Total} = \mathbf{7} \text{ ms}$$

Conclusion: For a single message, datagrams are fastest. For many messages over same path, VCs amortize the setup cost.

3.3 Comparison: All Three Switching Methods

Feature	Circuit Switching	Virtual Circuit	Datagram
Path setup	Yes (before data)	Yes (before data)	No
Dedicated resources	Yes	No (shared)	No
Data type	Continuous stream	Packets (with VCI)	Packets (with addr.)
Addressing in data	No (circuit is fixed)	VCI (local)	Destination address
Packet order	Guaranteed	Guaranteed	Not guaranteed
Routing per packet	Not needed	VCI lookup (fast)	Full address lookup
Congestion during call	None (fixed BW)	Possible	Possible
Failure recovery	Must re-setup circuit	Must re-setup VC	Packets rerouted automatical
Bandwidth waste	Yes (idle time wasted)	No	No
Layer	Physical	Data-link / Network	Network
Example	PSTN phone network	ATM, Frame Relay	Internet (IP)

Chapter Summary

Key Takeaways — Chapter 8

Section 8.2 — Circuit Switching:

- Three phases: **Setup** → **Data Transfer** → **Teardown**.
- Resources (bandwidth, buffers) are **dedicated** for the entire call duration.
- Data flows as a **continuous stream**; no packetization; no addressing during transfer.
- **Efficient for voice** (real-time, continuous): guarantees bandwidth and low delay.
- **Inefficient for data** (bursty): wastes bandwidth during idle periods.
- No queuing delay at switches, but has setup delay.

Section 8.3 — Packet Switching:

- **Datagram**: No setup. Each packet routed independently. May arrive out of order. Internet uses this. Fast for short messages.
- **Virtual Circuit**: Setup phase establishes path. All packets follow same path (in order). Each packet carries VCI (not full address). Resources shared (not dedicated). ATM uses this.
- Both use **store-and-forward**: each router receives full packet before forwarding.
- **Datagram delay** $= k \times \frac{L}{B} +$ propagation (for k routers).
- Packet switching is far more **efficient** for bursty data (like internet traffic).