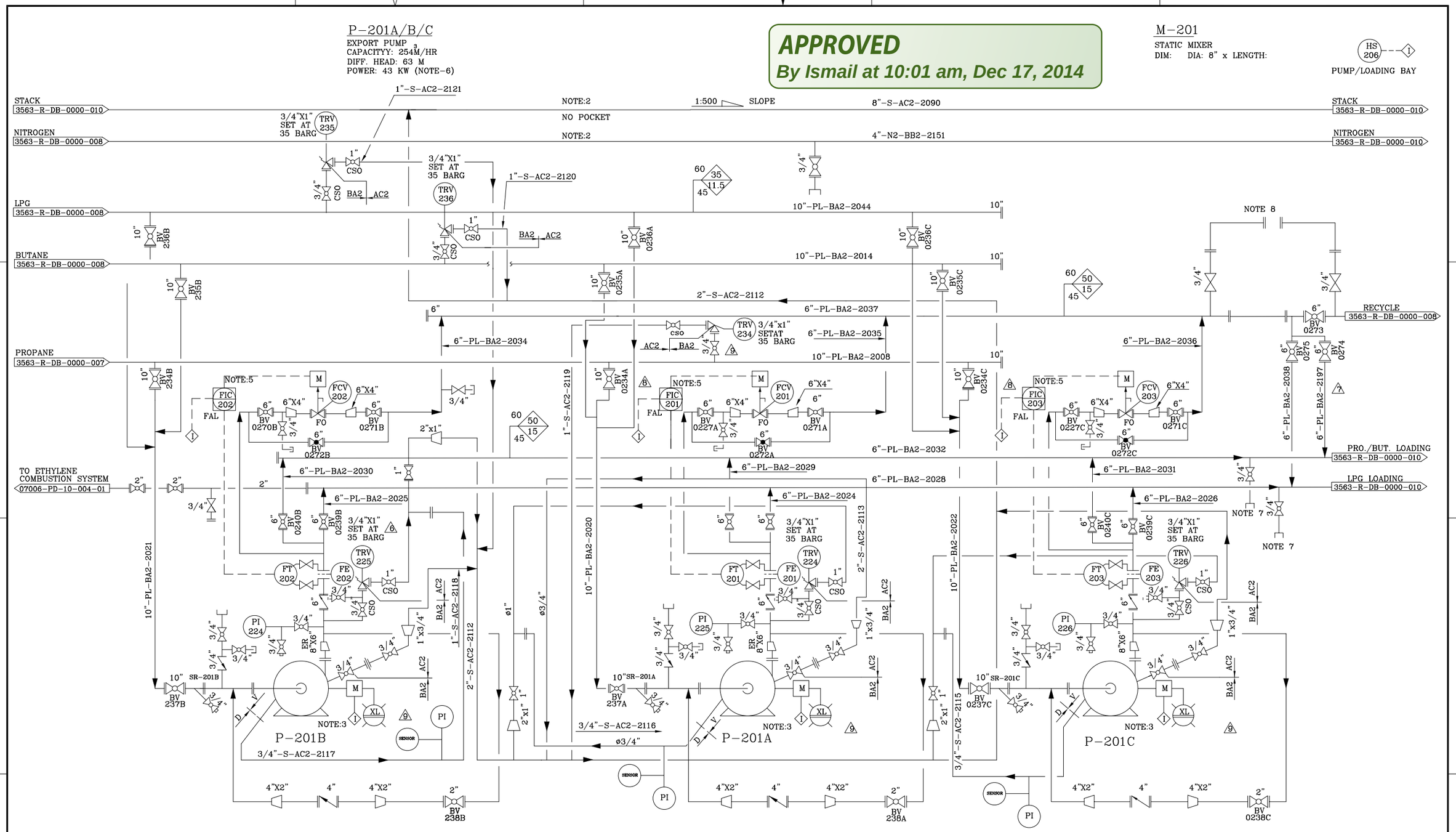

NOTE(S):-

1. REFER P & ID 3563-R-DB-0000-002 FOR LEGEND AND GENERAL NOTES.
2. ALL CONNECTIONS FROM TOP OF THE HEADER.
3. AUXILIARY PIPING FOR PUMP WILL BE REVISED ACCORDING TO PUMP VENDORS REQUIREMENTS.
4. PREFERABLY SINGLE HEADER OF DIA 2" FROM PUMP AREA EXTENDED TO STACK HEADER.
5. FOR MIXING AND RECYCLING FLOW WILL ALWAYS BE MORE THAN THE MINIMUM.
6. POWER WILL BE CALCULATED ON BUTANE BASIS AND CONFIRMED BY VENDOR.
7. FOR ODORIZATION.
8. FT AND M-201 IS REMOVED

REV	DATE	DESCRIPTION	INIT.	SIGN	INIT.	SIGN	INIT.	SIGN
			DRW'N BY		CHK'D		APP'VD	
12	24.09.09	AS BUILT	SZH		BIK		–	
11	17.12.03	SECOND AS BUILT	MAA		IU		SNR	
10	4.7.2K	FIRST AS BUILT	MIM		IU		SNR	
9	06.12.99	AS BUILT	YM		ZM		IA	
8	06.02.99	AS MARKED	YM		ZM		MH	
7	30.01.99	ISSUED FOR CONSTRUCTION	YM		ZM		MH	

REVISIONS

UNAUTHORIZED REPRODUCTION OF ANY KIND IS PROHIBITED; ALL RIGHTS ARE RESERVED BY DESCON ENGINEERING LIMITED, LAHORE, PAKISTAN

DESCON ENGINEERING LTD.
P.O. BOX 1201, LAHORE 54000, PAKISTAN

	INIT.	SIGN	DATE
ORIGINAL			
ENGINEERED	RZA		6/12
DRAWN	YM		6/12
CHECKED	ZM		6/12
APPROVED	IA		6/12

E.F. NAME: L4R009K

SIZE	SCALE
A3	NTS

THIS DOCUMENT HAS BEEN MODIFIED MANUALLY
☐ YES ☑ NO

CLIENT: ENGRO — ENGRO PAKTANK TERMINAL LTD.

PROJECT: LPG STORAGE & HANDLING

TITLE: P & ID TRUCK LOADING PUMPS

EPTL DOC. NO.	DOCUMENT NUMBER	SHEET NO.	OF	REV.
DR0091 0	3563-R-DB-0000-009-*	1	1	13