Manual 2019

WOOD WORKSHOP

WORKSHOP PRACTICE

MR. RANA MUHAMMAD TARIQ

UNIVERSITY OF ENGINEERING AND TECHNOLOGY, LAHORE

1. Mortising machine (for making grooves)
2. Drill machine (for making holes)
3. Double end tool grinding machine
4. Saw and blade sharpening machine
5. Circular saw
6. Band saw
7. Jig saw
8. Wood turning lathe
9. Surface planar 10.Thinner
10. Surface planar
11. Universal wood working machine
12. Spindle moulder
13. Door

WOOD WORKSHOP

ASSIGNMENT

ON

SAFETY PRECAUTIONS

Introduction:

An action taken in advance to protect against possible danger, failure, or injury; a safeguard: followed safety precautions when using heavy machinery.

Lab Safety Rules:

- Dress Appropriately
- Proper Supervision
- Don't Eat OR Drink
- Switch off Machines when used
- Use brush for cleaning
- Mobile phones are not allowed
- Shoes must be worn
- Use First aid box
- No oiling or cleaning during operation
- Rotatory equipment don't touch it
- No jewellery
- No smoking
- No flame
- Wear safety goggles
- Wear mask
- Wear lab coat
- Read labels carefully
- Long hair must be confined
- Close doors and windows
- Wash hands before leave lab
- Clean up your work area before leave lab

Dress Appropriately:

- Tie back long hair.
- Don not wear loose sleeves.
- Do not wear shorts.
- Do not wear sandals.
- Do not wear contact lenses.

Dress appropriately

Proper Supervision:

- Don't start performing experiment without instructor's supervision.
- In case of any injury no matter how minor,
- Notify the instructor once.

Supervision:

Don't eat or drink:

- Do not eat or drink in lab.
- Never taste any chemical.
- Don't chew on the end of pen that was lying on lab bench.(precautions, 2016)

Don't eat or drink

Switched off machines when used:

- Make sure, while leaving the lab after the stipulated time that all the power connections are switched off.
- Power supply to machine must be switched on only after the faculty checks and gives approval for doing the work.
- Students must start work after getting permissions from the faculty.(Safety Rules, 2015)

Don't Switch On Machines

Mobiles phones are not allowed:

- Mobilephones are not allowed in workshop.
- Mobiles are banned so that students can focus on what's important in workshop__working.
- They would just be a distraction with games, messaging and social media.

Mobiles not allowed

Rotatory Equipment don't touch it:

Not touch rotatory equipment

- Do not remove guards, clean, oil or repair machines while in motion.
- Exposed moving parts can cause severe injury.
- Do not operate machine without guard in place.
- Follow lockout procedure before servicing machines.

Wear goggles:

- Must wear goggles in workshop.
- If you must wear contacts be especially careful to wear goggles at all times and don't touch your eyes with fingers.
- Chemicals can get behind the lens, between it and your eyes.(wood safety precautions, 2017)

Wear shoes:

Wear shoes

- Always wear closed-tae shoes in the workshop and lab.
- That aim to protect yourself not to be harmed by hushing chemicals, sharp materials etc.

Wear lab coat:

Wear Coat

- Lab coat must be worn in the workshop.
- That aim to protect their clothes against damaging or accidentals spills or stain.

Wear gloves:

Wear Gloves

- Gloves must be worn in the workshop when working with hazardous chemicals and other materials.
- That aim to protect our hands from infection and contamination.
- Protective gloves should be selected on the basis of hazardous involved.

Wear Mask:

Wear Mask

- Wearing a face mask will help prevent the spread of infection and prevent the individual from contracting any airborne infectious germs.
- When someone coughs, talks, sneezes they could release germs into the air that may infect others nearby.
- Face masks are the part of an infection control strategy to eliminate cross-contamination.

No Smoking:

- Smoking is not allowed in workshop.
- Smoking is a major cause for concern within a workplace.
- It can have a direct impact on both smokers and non-smokers, and ultimately employers.
- Smoke and cigarette butts affect the environment the most, resulting into air, water and land pollution. Even the production of cigarettes influences the environment a lot.

No Smoking

No Flame:

- Fire presents significant risk to businesses.
- It can kill or seriously injure employees or visitors and can damage or destroy buildings, equipment.
- Fire may have a more significant impact on businesses that: stock combustible materials including flammable liquids or gases, use heat processes, have poorly maintained equipment or electrical circuits
- However, any organization may be affected at any time.

No Flame

Use First Aid Box:

- A small box containing items such as bandages, plasters, and antiseptic wipes for use in giving help to a sick or injured person until full medical treatment is available.
- Use all of the items in your kit, especially the medications.
- You may be the one who needs first aid.
- Pack and use barrier items such as latex gloves to protect yourself from the bodily fluids of others.

Use First Aid Box

Worn Ear Protection:

- Ear protection must be worn.
- That aim to protect the ears from noise pollutions. (Woodworing Rules, 2015)

Worn ear protection

Close Door and Window:

- Door and windows should be in the workshop for don't entering any dust particles in the machines and machines run smoothly.

Close door & windows

No oiling or cleaning during operation:

- Do no cleaning or oiling during the operation of machines.
- Donot remove guards, clean, oil or repair machines while in motion.
- Exposed moving parts can cause severe injury.

No oiling during running

No Jewellery:

- Jewellery and other valuable are prohibited.
- That aim to protect students from accident or injury while working with machines in the workshop.

No jewellery

Washhands before leave lab:

- To prevent contamination of your hands or work surfaces, wash rubber or plastic gloves thoroughly with water before removing them.
- Pull off disposable gloves inside out and dispose of them according to the contamination hazard. Always remove contaminated gloves before leaving the laboratory.

Wash hands

Keep workplace clean and tidy:

- A clean workplace means more than just having a sparkling, fresh building. A clean workplace also ensures the safety and health of employees and visitors.
- Workplace injuries can be prevented by taking action to ensure a clean, safe work environment.

Clean workplace

Conclusion:

These precautions has taught you how to:

- Protect yourself in a laboratory setting
- Understand emergency protocols
- Know the names and functions of lab instruments

KINDS OF TIMBER

(Types of wood used)

Timber commonly used in woodwork shop can be readily classified into two types though there are exceptions in many wood.

Types of wood are:

HARDWOOD:

Hardwood has the following characteristics: Heavy in weight , High density, Close fibers ,Darker in core, Leaf shedding trees, Broad shaped leaves only, Trees grow in tropical

SOFTWOOD:

Softwood has the following characteristics: ,Light weight ,Lighter in core ,Low density ,Ever green leaves ,Needle shaped leaves ,Trees grow in cool areas.

HARDWOOD

Commonly used commercial species of Hardwood are:

MAHOGANY:

Mahogany is a type of hardwood is finally grained wood with reddish brown color. It is highly durable and can resist swelling, shrinking and napping.

SHEESHAM: (DALBERGIA SISSOO)

Sheesham is known as Indian rose wood and it is rich medium brown wood with deep grains. It is highly durable and easily cared.

TEAK:

Teak is hard and moisture resistant wood. It resists napping, cracking and dewy. Best application for furniture.

WALNUT:

Walnut has fine textures and strong. It is easy to work with it and resist shrinking and wrapping when work with it.

MAPLE:

Maple is a fine textured wood with immense strength and hardness. It is good for furniture and wood work.

CHERRY:

Cherry is a closed grain wood and resist wrapping and shrinking. Cheery changes colour when exposed to sunlight into darkening real.

ROSE WOOD:

Rose wood is a closed grain wood with dark red brown colour. It has an exclusive fragrance. Rose wood is relatively hard to work with.

EBONY:

Ebony is the blackest and dense wood. It gives a beautiful finish with little effect. It is light grey with contrast.

BALSA:

Balsa has lightest density. It has a textured beige with little grain. Although thin strip of it snaps easily. It has a great strength to weight ratio, used in air craft.

MULBERRY:

Mulberry has a medium density with closed grain strength. It i s easy to work with it. It bends easily on heating and readily turn on clothe. It colour tends to brown in sunlight.

TOON:

Toon is also called cedar, is light weight and easily work with. It is used to make furniture's, packing boxes and door panels.

EUCALYPTUS:

Eucalyptus is fine grained dense hard wood good for construction. When dried, it shrinks and darkens on seasoning. However, it is very resistant and durable.

KIBAR:

Keekar (acacia) is strong,hard and tough. It is inelastic and takes a good polish.

SOFT WOOD:

Commonly used commercial species of soft wood include:

PINE:

Pine has a uniform texture and it is very easy to work with. It finishes well and resist shrinkage, swelling and wrapping.

HEMLOCK:

Hemlock is light weight and work well on machines. It has a uniform texture through low resistant to decay.

FIR:

Fir is usually uniformly textured and has a low resistance to decay. It is non-resinous work easy and finishes well when worked on.

RED WOOD:

Red wood is light, durable and easy to work with. It has a natural resistance to decay. It is good for making outdoor furniture.

CEDAR:

Cedar is a reddish wood with street odour. Easy to work with, uniform texture and resistant to decay. It is used for making chest and linings.

CYPRESS:

Cypress is a strong and hard soft wood resistant to decay and corrosion. It is heavy and durable and easily shrunk. It gradually changes to light colour.

WOOD SEASONING
(Preparation of wood)

Once the rough (excess) material of the wood is removed, wood is converted onto planks and treated to increase its durability. This process is called seasoning. Wood is seasoned to:

- Increase dimensionally stability.
- Reduce or eliminate attack by decay or stain.
- Reduce weight (drying result in loss of mass).
- Increase strength, thickness and hardness.

Wood is seasoned naturally or artificially.

Natural Seasoning:

Air Drying:

It is the traditional method-timber is stacked in air and atmospheric heat and natural our currents, circulating the stack cased moisture to evaporate.

Wood is water logged first to insect attack and cut into planks. There planks are stacked, allowing plenty of air to circulate each piece, water evaporates removing moisture.

Natural seasoning is a slow process especially for hardwood. Typically wood takes 6 to 9 months to reach 20- 25% moisture level.

Artificial Seasoning:

Kiln Seasoning:

Kiln seasoning occurs on large commercial basis whereby seasoning process is accelerated by external energy. Forced air circulation by large fans, heat from piped steam and humidity through clean jets are worked to season effectively. The species, sized and quantity determine the optimum conditions. Kiln seasoning is further classified as:

Progressive Kiln:

Timber added progressively after entering one end. Throughout kiln length, temperature and humidity differentials are maintained. Progressive kiln can be natural draft kilns or forced draft kilns. Timbers are stacked on rolleys which move compartment to compartment each of different conditions.

Hardwood are traced at temperature below water boiling, point to prevent damage. After reading, moisture 20-25%, it is kept 10-14 days' top lower it to 10-15%.

Compartmental Kiln:

Timber is enclosed in a single container and subjected to programme of setting for the desired moisture content. Timber remains in the same place, thus decreasing the size of kilns.

Due to their construction, temperature and humidity can be closely controlled and this is used to treat expensive or difficult hardwoods and materials.

Solar Drying:

Solar drying is a compromise between energy required and time consumed. Used for high grade application like furniture, it is slower and gentler. Prior to it, many hardwoods are dried to the fibre saturation point. Solar kilns are lightly insulated, to trap heat using a number of configurations.

Microwave Seasoning:

Microwave seasoning uses pulsed microwave energy, directed into a timber layer, to effectively dry out moisture without causing seasoning degrades. Energy deliverance can be varied from second to second to suit moisture control and pressure conditions. With ambient conditions of low pressure microwaves hive optional speed.

Chemical Seasoning:

Chemical seasoning is used for very high value applications like carvings and rifle huts. Green timber is soaked in a hydroscopic chemical for 24 hours, slowing down moisture loss and reducing risks of internal risk. Prevention can be:

- Oily Based: Coal tar is best known water insoluble and hence permanent, it has high presentation but give off odor and timber inflammable difficult to be painted.
- Water Soluble: Zinc chloride is most expensive used clean colorless.
- Salts: AsCu is odorless fine resistant used to stains wood.
- Paints: Enhance appearance but only use for well-seasoned wood as moisture may be entrapped.

DEFECTS IN WOOD
(Common Timber Defects)

Wood may contain defects either naturally or induced unintentionally by artificial means. Most common of these include:

Compromise timbers strength:

- Knots
- Insects hole

Cause the splitting of fiber and reduced their ordered arrangements:

- Cracks
- Cup
- Bent Planks
- Thunder Shake
- Secretion Cavities

Affect the external and internal appearance causing the finishing to be effected:

- Blue Stain
- Machine Burn
- Black Hearts
- Tight Knots
- Twist

Other defects are:

- Wood Wane
- Crook

Prior to working with wood all the defects should be removed or resolved because it becomes difficult to remove defects after finishing.

Knots:

- Features: A dark round area with concentric ring.
- Cause: Dead branches drop off healthy, living trees all the time, and wood knots appear in the trunk where branches died. Knots are imperfections that cause living wood grain to grow around them.
- Effects: Mas the wood appearance and falls out, weakening the wood or even becoming loose.
- Solution: Cut and discard the affected area.

Insects Hole:

- Features: Small hole penetrating wood surface.
- Cause: Attack of insects bearing inside wood.
- Effects: Proactive wood working.
- Solution: Chemical treatment or water logging to kill insects. Cut round decayed volume and reserve wood for decorative use.

Cracks (Checks)

- Features: Split or break at the end of board running along the grain.
- Cause: Rapid drying of wood.
- Effects: Compromises of strength and appearance of board.
- Solution: Split end should be cut off or worked around with.

Cup:

- Features: Raping along the board face, along edge to edge, very common for timber plan room.
- Cause: Drying of one board face faster than other.
- Effects: Stok becomes difficult to work with, to face it flat, cracking may occur along the grain.
- Solution: Allowing the board to dry at the same rate.

Bows: (Bents)

- Features: Bending of boards causing along the face usually occur from one face to other.
- Cause: Unbalanced moisture evaporation from side only. Ill
- Effects: Stok is difficult to work with; end bend part is removed as excess material.
- Solution: Cut into pieces, evened out on a joi nter or by nail hammered in.

Secretion Cavities:

- Features: Accumulation of secretion or light causing cavity formation on the surface or in the pockets below the surface. May be filled with resin, gum or pitch.
- Cause: Tree injury.
- Effects: Difficulty in working and finishing.
- Solution: Cavities should be cut off or scrapped out and filled.

Crooks:

- Features: Wrapping along the edge end to end.
- Cause: Improper drying and storage or pressure of reaction.
- Effects: Difficulty of working with crooked wood.
- Solution: Cutting away raised or elevated spots by table sew.

Thunder Shake:

- Features: Twisting or bending of fibers to side of the wood planks.
- Cause: Shock caused when tree cut.
- Effect: Cracks and splits may occur in the volume of fiber distribution.
- Solution: Volume of distortion identifies, cut off and discarded.

Wood Wane:

- Features: Lack of wood at edges or corner.
- Cause: Worn drain of wood due to tear.
- Effects: Dimensional unit ability, less strength with stood.
- Solution: Sharpening and removing wood surface for necessary volume.

Blue Stain:

- Features: Bluefish grey discoloration on wood surface.
- Cause: Growth of mold in warm, moist area (due to proper ventilation).
- Effects: Wood discoloration.
- Solution: can be cut of or concealed with dark tint.

Machine Burn:

- Features: Dark sheiks along face of wood.
- Cause: Action of the planer blade that are dull and span on board.
- Effects: Surface discoloration and weaken the wood.
- Solution: Use sand block, sewed of or cut with jointer.

Black Hearts:

Features: A zone of dark colored wood in of the log. Effects: Exposure on wood face reserved for decoration. Solution: Die placed or cut off.

Tight Knots:

Features: A knot tightly integrated into the surrounding wood. Cause: A branch incorporated into tree as its growth increase. Effects: Visible appearance.

Twists:

Features: Wrapping in wood where ends twist in opposite. Cause: Growing conditions or presence of reaction wood. Effects: Difficulty in working.

PROPERTIES OF WOOD

(Wood Characteristics)

Wood when seasoned, can suffer damage due to seasoning degrade. Significantly, degraded pieces are removed and rejected. Often it occurs due to collapse of cell giving corrugated on washboard appearance and irregular cross section. It is controlled by re-humidification in steam chamber, if possible wood is then analyzed in the following characteristics:

Sapwood:

Living tissue having higher moisture content.

Heartwood:

Former living tissue filled with resins.

Annual Pings:

Wood tissue formed during each year of growth.

Anisotropy:

Shrinkage and unequal dimension changes.

Softwood Cells:

Long, furrows and flexible tissues.

Hardwood Cells:

Dense tissue which can be diffused or ring porous.

Ray Tissues:

Vascular tissue radiating from center, giving center.

Lignin Ext activities:

Inter cellular adhesive compounds.

WOOD QUALITIES

- Color and luster
- Odor and taste
- Grain and texture
- Characteristics:

1. Weight
2. Hardness
3. Color distribution

WOOD WORKSHOP TOOLS

(Hand Tools Used)

Steel Ruler:

Steel rulers are used to measure the dimensions of woodwork piece. Used as a normal ruler, steel rulers are used to sketch right lines.

Marking Gauge:

It is usually operated in woodwork shop. Having a sharp end, it is used to mark cut lines for cutting and other operations individual marking straight lines.

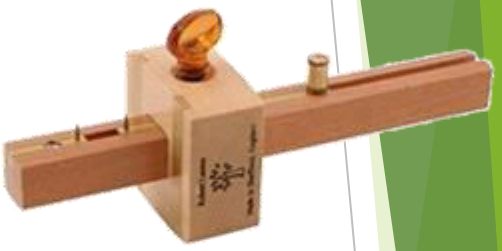

Tri-square:

It is used for metals. It is used for marking and measuring a piece of wood, chiefly used for dimensional stability. It is used for measuring accuracy of right angles. Available in 12" and 6" scale.

Smooth Surface Planer:

Surface planner is used for less general smoothening of edge, sizing of wood and joining of edges. Planner is long and the blade can have either a slightly large curved edge for smoothing.

Cross peen Hammer:

Cross pen hammer is used in both blacksmith and wood workshop for forging operations. The peen end is used for spreading metal perpendicular to peen direction.

Half Round File:

It is one of the most versatile tool as it has one flat and round surface. It is useful for fitting concave and flat wood or metal surface. If cutting edges are diagonal to case removal.

Triangular File:

Triangular file is used for cutting glass tubing or other general lab purposes. Triangular file is used to make the surface smooth between the edges where other files cannot reach.

Nipper:

Nipper is used in wood workshop operations to eject nails from other objects. It is also used for cutting metals.

Snipper:

Snipper is used to eject nails from different objects used in wood workshop. It is also used for cutting materials.

Mallet:

Mallet is used to knock wooden pieces together or to drive chisels. A wooden mallet does not deform the striking end of a metal tool but also reduces the force available to drive the cutting edge.

Mortise Chisel:

Mortise chisel are used for clipping out joints. They are particularly carefully useful for cutting mortise joints. The handle is made of ash or beech with steel hoop is prevent splitting.

Bevel Edge Chisel:

Bevel edge chisel is used for making cuts easily into corners. Normally used for dove tail joints, bevels make the blade less strong.

Gouge Chisel:

It is used to make designs and remove wood from the work pieces. It is used to make joints in wood pieces.

Firmer Chisel:

It is used to cut the material with the mallet with which it is forced into work pieces. Similar to but chisel it has larger flexible blade to make specific design.

Cross Cut Saw:

It is used for cutting wood materials. It has teeth di=design at right angles to direction of wood grain with a wooden handle.

WOOD WORKSHOP MACHINES
{Power Tools Used)

Generally wood workshop displays the type of tools for all operations. Hand tools which use human labor and input and power tools which use machine or mechanical power for all operations.

Power tools have greater demand due to increasing individual requirements and greater accuracy and precision which they offer. Power tools reduce time frame, are efficient for long scale work, heavy loads and other tasks beyond human capability. Woodwork shop has chief applications in ship work, plywood, interiors, agriculture, implements and even furniture.

The commonly used machines in woodwork shop are:

Mortising Machine:

It is used for making greases in work pieces.

Band Saw:

It is used for cutting the wood.

Drilling Machine:

It is used for making holes in work pieces.

Double End Tool Grinder:

For sharping the faces of tools and blades.

Saw & Blade Sharpening:

It is used for buffering wood pieces.

Circular Saw:

It is used as a belt powered blade for cutting.

Spindle Moulder:

It is used for making wooden bends.

Jig Saw:

It is used for designing on wooden hardboards.

UNIVERSITY WOOD WORKING MACHINE

Machines

Universal wood working machine is consisting of the combination of six machines related to wood workshop. These are:

- Circular Saw
- Band Saw
- Jig Saw
- Wood Turning
- Surface Planner
- Thickness Planer

Wood Turning Lathe:

Wood turning lathe is used for circular designing on wooden pieces.

Surface Planar and Thickness:

It is used .for finishing of wood cut by the band saw.

Other Names:

Other machines used in wood workshop are: Copy router machine

- Drum sander
- Combine chain and chisel mortiser
- Oscillation mortiser
- Dust collection
- Pneumatic clamp carrier
- Vertical band saw
- Vertical splinter molder

JOINTS

(JOINTS USED IN WOODWORKSHOP)

Wood joints are used in mil work construction, custom shop built, wood components design for construction especially for joints items such as base board or crown molding produced are shipped to those job site in lengths.

Properties of Joints

The properties of joints are listed below: Joints has valuable variations such as middle half and end lap. Combination of joints fortifies a connection for example dovetail dado and tongue etc.Screws are used to connect sections of the joints together. Applied from the inside of the unit they do not appear visible from overall appearance. Joints which link have an exceptional durability. A visible connection such as dada, rabbit and uniqueness of wood work.

TYPES OFJOINTS:

Butt Joint:

The end of a wood is butted against another wood piece. It is simplest but weakest.

Dado Joint:

A slot is cut across the grain in one piece for another piece set into.

Rabbet Joint:

A rabbit is groove cut into the edge of wood to form a joint.

Lap Joint:

Joint is formed by the overlapping one wood piece over the other.

Dove & Tail Joint:

Dovetail joint is the form of box joint where fingers are blocked by diagonal cuts.

Mortise & Tenon Joint:

Tenon is a wooden stun which is fit tightly into whole cut for it, the mortise.

Miter Joint: Like the butt joint the wood pieces are cut at 45 degrees to each other.

Tongue & Groove Joint:

Each piece has a groove cut all along one edge a thin deep tongue on the opposite edge.

Birds Mouth Joint: Use in the roof construction. It has V-Shaped cut to connect the wall plate.

LAB WORK

Objective: To make a wooden switch board. Material: A soft wood Deodar.

Tools:

- Steel Ruler
- Tri-square
- Marking Gauge
- Cutting Saw
- Surface Planer
- Half Round File
- Firmer Chisel
- Mallet

Procedure:

Four strips of wood are to be shaped first. Tow strips should be of dimensions "170 x 30 x 10" and two of "100 x 30 x 10 Use surface planer to flatten two adjacent sides of given wooden block and check right angle between side with the aid of tri-square. 3. Using marking gauge mark the wooden block at 10mm width using one side as base and remove the material up to marked level and check with tri-square wither it is horizontal or not. 4 Using marking gauge and saw reduced the larger wooden blocks to 170mm and smaller to 100mm and reduce friction. 5. Repeat the same procedure for all wooden strips. 6. The width and height of the wooden strips has been reduced to required size use tri-square to check all the right angles. 7. Now make dove & tail joints using saw firmer chisel and fix the wooden strips to make board.

Result: Wooden board is ready

Course Work for Wood workshop
Manufacture a wooden box

PREPARATION OF LONG STRIPS

Dimensions for Long strip will be

- Length = 170mm
- Width = 30mm
- Thickness =10mm

Tools used for making longer strip are

- Deodar wooden samples
- Steel ruler
- Marking gauge
- Try square
- Surface planner
- A half round file
- Cross cut saw

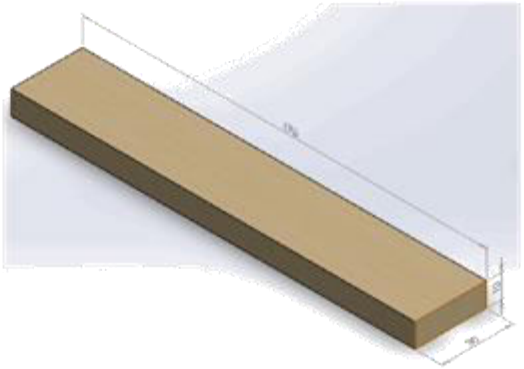

Figure1. Dimensions of Long strip

Procedure:

- Take wooden samples and check its dimensions with steel ruler, these should be greater than the prescribed values
- Using surface planner make the top and side plan smooth by removing the material from these sides and check the orthogonality of the edges of the wooden piece
- Using marking gauge mark the dimensions for width and thickness on the rough sides of the plan
- Reduce the thickness and width using surface planer

- During the smoothing process check whether the edges are perpendicular to each other or not, make them perfectly orthogonal if they are not Use half round file to smooth the transverse planes of the samples

JOINT CUTTING ON LONG STRIP

Tools required for cutting dove tail joint

- Deodar wooden samples
- Steel ruler
- Marking gauge
- Try square
- Surface planner
- A half round file
- Cross cut saw
- Mallet
- Firmer chisel

Procedure

- First of all, mark the center lines on top, bottom and transverse planes of the smooth wooden long strip
- Mark a line at a distance of 10 mm from the edge of the strip on all the faces; we will call it base line

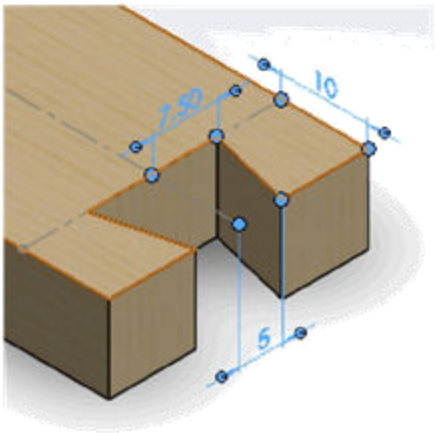

Figure2. Dimensions for dove tail joint cutting on Long strip

- On top and bottom surface, from the center line, mark the points at 5mm on the edge line on both sides of the center line; now mark the points at a distance of 7.5 mm from the center line on base line. Join these marks on both sides of center line
- Similarly, repeat the process for all the 4 edges of longer strips
- Now using cross cut, Cut the dimensions over long strip and using mallet and firmer chisel remove the material from the center of the marking.
- The final longer strip with dove tail joint cutting and all dimensions is shown in figure 2.

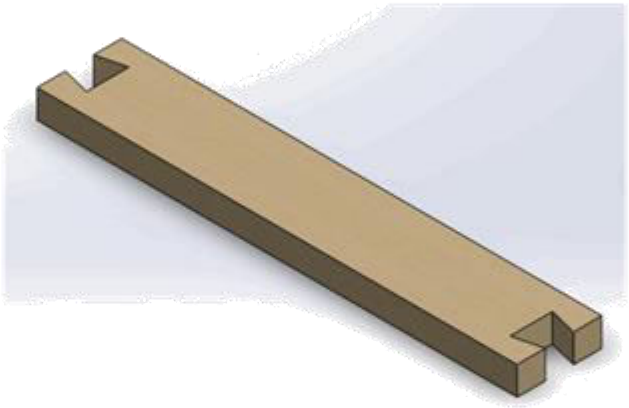

Figure3. Finally prepared long strip

PREPARATION OF SMALL STRIP

Dimensions for Long strip will be

- Length = 100mm
- Width = 30mm
- Thickness =10mm

Tools used for making small strip are

- Deodar wooden samples
- Steel ruler
- Marking gauge
- Try square
- Surface planner

- A half round file
- Cross cut saw

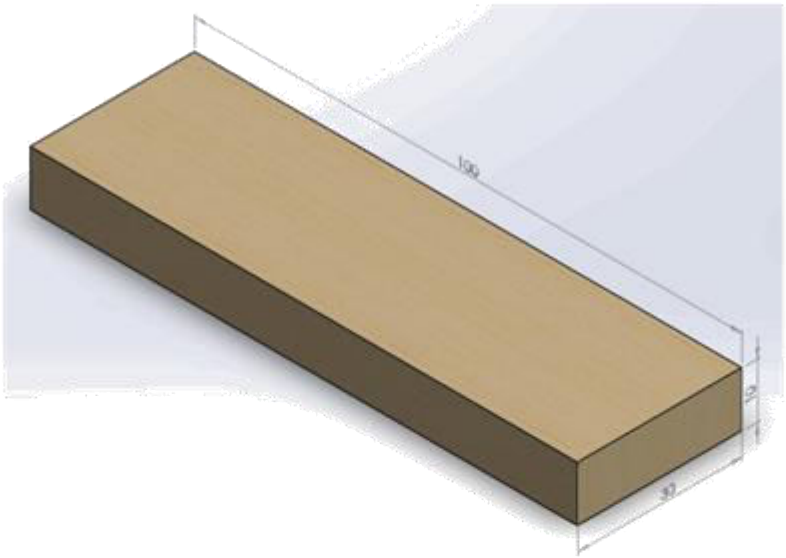

Figure4. Dimensions of small strip

Procedure:

- Take wooden samples and check its dimensions with steel ruler, these should be greater than the prescribed values
- Using surface planner make the top and side plan smooth by removing the material from these sides and check the orthogonality of the edges of the wooden piece
- Using marking gauge mark the dimensions for width and thickness on the rough sides of the plan
- Reduce the thickness and width using surface planer
- During the smoothing process check whether the edges are perpendicular to each other or not, make them perfectly orthogonal if they are not
- Use half round file to smooth the transverse planes of the samples

Joint cutting on small strip

Tools required for cutting dove tail joint

- Deodar wooden samples
- Steel ruler
- Marking gauge
- Try square
- Surface planner
- A half round file

- Cross cut saw
- Mallet
- Firmer chisel
- Cross Pin Hammer

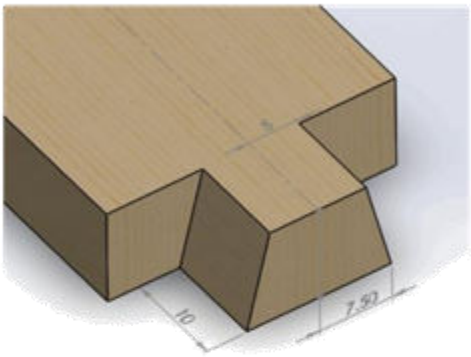

Figure5. Dimensions for dove tail joint cutting on small strip

Procedure

- First of all, mark the center lines on top, bottom and transverse planes of the smooth wooden long strip
- Mark a line at a distance of 10 mm from the edge of the strip on all the faces; we will call it base line
- On top surface, from the center line, mark the points at 5mm on the edge line and on base line on both sides of the center line; now on bottom plane mark the points at a distance of 7.5 mm from the center line on edge line as well as on base line. Join these marks on both sides of center line
- Similarly, repeat the process for all the 4 edges of longer strips
- Now using cross cut, Cut the dimensions over markings on the strip and remove the unwanted material of the strip.
- The final smaller strip with dove tail joint cutting and all dimensions is shown in figure 2.

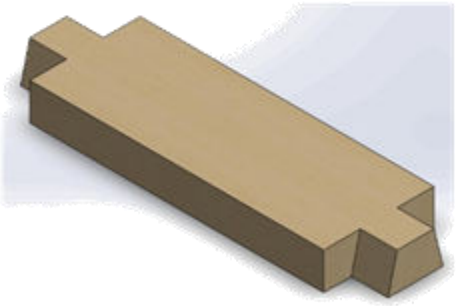

Figure6. Finally prepared small strip

Assembly

- Put the two small and two long strips together to get an interlocking joint in the form of a wooden box.
- Prepare a rectangular panel of dimensions 170mm × 100mm × 10mm using the same procedure described above and put the panel on the joint strips, and finally fasten them with nails and hammer.

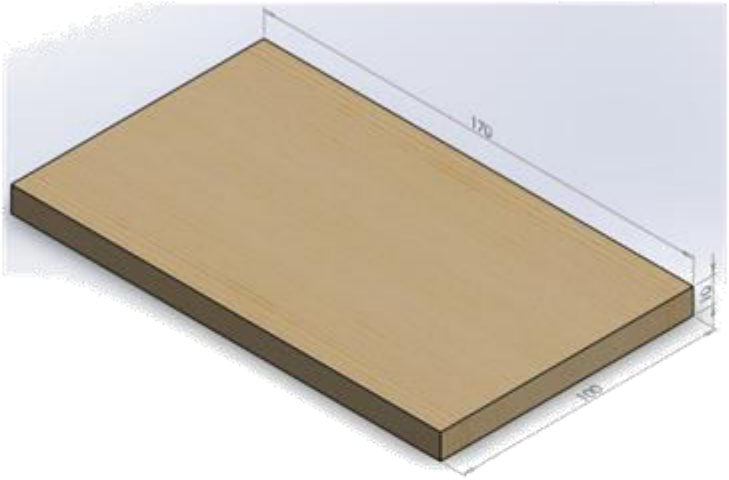

Figure7. Rectangular strip for assembly

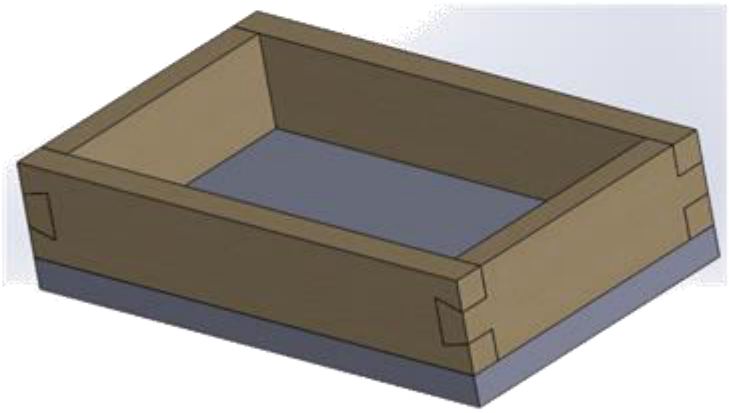

Figure8. Assembled wooden box