Final Year Project

CRIMEX

CRIME REPORTING AND CASE MANAGMENT

Software Requirement Specification

FYP Team

Zubair Ali 22P-9232

Muhammad Shakeel 22F-3404

Ali Hassan 22F-3405

Supervised by

Ms. Samia Aziz

Department of Computer Science

National University of Computer and Emerging Science

Chiniot, Pakistan

2025

Table of Contents

1. Introduction....5
2. Vision Document....5
   2.1 Problem Statement....5
   2.2 Business Opportunities....6
   2.3 Objectives....6
   2.4 Scope....6
   2.5 Constraints....6
   2.6 Stakeholder and User Description....7
      2.6.1. Market Demographics....7
      2.6.2. User Environment....7
      2.6.3. Stakeholder Profiles....8
         2.6.3.1. Supervisor Team....9
         2.6.3.2. Development Team....10
         2.6.3.3. Citizens....11
         2.6.3.4. Law Enforcement Officers....12
         2.6.3.5. System Administrator....13
      2.6.4. Stakeholder Summary....13
3. System Requirements Specification....14
   3.1 System Features....14
   3.2 Functional Requirements....14
      3.2.1. Mobile Application....14
      3.2.2. Web Dashboard....16
      3.2.3. Administrative Panel....17
      3.2.4. AI Processing Engine....17
   3.3 Non-Functional Requirements....18
4. Use Cases....19
   4.1 Diagram....19
   4.2 High Level Use Cases....20
      4.2.1. Login / Signup....20
      4.2.2. Report Crime....20
      4.2.3. Attach Evidence....21
      4.2.4. Capture GPS....21
      4.2.5. Emergency Reporting....22
      4.2.6. Track Case Status....22
      4.2.7. Assign Case....23

4.2.8. Update Case Status....23
4.2.9. Close Case....24
4.2.10. Generate Closure Report....24
4.2.11. Manage Permissions....25
4.2.12. Add User....25
4.2.13. Delete User....26
4.2.14. Check Workload of LEO....26
4.2.15. Search Criminal DB by CNIC....27
4.2.16. Search Criminal DB by Face....27
4.2.17. View Hotspots....28
4.2.18. Analyze Behavioral Patterns....28
4.2.19. Send Notifications....29
4.3 Expanded Use Cases....30
4.3.1. Login / Signup....30
4.3.2. Report Crime....31
4.3.3. Attach Evidence....32
4.3.4. Capture GPS....34
4.3.5. Emergency Reporting....35
4.3.6. Track Case Status....36
....37
4.3.7. Assign Case....38
4.3.8. Update Case Status....39
4.3.9. Close Case....40
4.3.10. Generate Closure Report....42
4.3.11. Manage Permissions....44
4.3.12. Add User....45
4.3.13. Delete User....46
4.3.14. Check Workload of LEO....48
4.3.15. Search Criminal DB by CNIC....49
4.3.16. Search Criminal DB by Face....50
4.3.17. View Hotspots....52
4.3.18. Analyze Behavioral Patterns....53
4.3.19. Send Notifications....54
5. Domain Model....56
....56
6. Class Diagram....57

7. Entity Relationship Diagram.....58
.....58
8. Activity Diagrams.....59
.....59
9. System Sequence Diagrams.....60
9.1 Report Crime.....60
.....60
9.2 TrackCase.....61
9.3 CaseManagement.....62
9.4 Background Verification.....63
9.5 Geospatial Crime Analytics.....64
.....64
9.6 User Management.....65
9.7 Registration:.....66
9.8 Emergency Reporting.....67
10. Component Diagram.....68
11. Data Flow Diagram.....69
11.1 Level 0.....69
11.2 Level 1.....70
11.3 Level 2.....71
11.3.1. Citizen.....71
11.3.2. LEO Portal.....72
11.3.3. Admin Panel.....74
11.3.4. Shared Services.....75
12. Architecture Diagram.....76

1. Introduction

CRIMEX (Secure Intelligent Crime Reporting and Case Management Platform) is designed to revolutionize crime reporting infrastructure through advanced technology integration. This comprehensive system addresses critical gaps in the current law enforcement ecosystem by providing secure, intelligent, and accessible crime reporting mechanisms while incorporating cutting-edge capabilities for case management.

2. Vision Document

2.1 Problem Statement

Table 1: Problem Statement

Category	Description
Problem	• Only 23% of crimes are formally reported to police authorities in Pakistan. • Women report merely 8% of harassment and assault cases due to social stigma. • Average case processing time: 45-90 days for minor crimes • 67% of physical evidence is lost, corrupted, or tampered with • 89% of police stations use outdated paper-based systems from the 1960s. • 34% of citizens abandon cases due to lack of progress visibility. • No accessible mechanism for criminal background verification
Affects	• Entire Pakistani society including victims, law enforcement, and judicial system • Public trust in law enforcement institutions • Community safety and security • Economic development due to crime-related losses
Impact	• Undermines rule of law and justice delivery. • Creates security risks in employment and housing decisions. • Prevents effective crime pattern identification Reduces public confidence in reporting crimes. • Allows repeat offenders to operate undetected
Solution	A comprehensive digital platform that: • Provides secure 24/7 crime reporting through mobile and web interfaces. • Enables criminal background verification using CNIC and facial recognition. • Offers real-time case tracking and automated notifications. • Provides behavioral pattern analysis for repeat offender identification.

	• Ensures cryptographic evidence integrity throughout investigation process

2.2 Business Opportunities

CRIMEX presents significant opportunities for:

- **Government Partnership**: Integration with existing law enforcement infrastructure
- **Technology Innovation**: Showcase of cutting-edge AI and security technologies.
- **Social Impact**: Contributing to UN SDG 16 for peaceful and inclusive societies.
- **Academic Impact**: Demonstration of advanced computer science applications
- **Commercial Potential**: Scalable solution adaptable to other developing nations

2.3 Objectives

The primary objectives of CRIMEX include:

- Develop a secure, multi-platform digital reporting system accessible 24/7.
- Create behavioural analysis algorithms for repeat offender identification.
- Establish cryptographic evidence verification systems.
- Provide real-time case tracking and notification mechanisms.
- Enable criminal background verification using CNIC and facial recognition.
- Generate crime hotspot analysis for predictive policing strategies.
- Reduce case processing time by 60% through automated workflows.
- Increase crime reporting rates by 40% through accessibility improvements.
- Provide public safety tools for informed decision-making.

2.4 Scope

The scope of CRIMEX encompasses:

- **Platform Coverage**: Mobile application (Android) and responsive web application
- **User Base**: Citizens, law enforcement officers, system administrators
- **Geographic Coverage**: Initially targeting Pakistan with scalability potential
- **Technology Integration**: AI/ML, cryptographic hashing and secure storage, geospatial analysis
- **Functional Areas**: Crime reporting, case management, evidence verification, background checks

2.5 Constraints

- **Technical Constraints**: Limited internet connectivity in remote areas may affect system accessibility.

- **Resource Constraints**: Development timeline limited to academic year requirements
- **Legal Constraints**: Compliance with Pakistan's data protection and privacy laws
- **Infrastructure Constraints**: Integration challenges with existing police systems
- **User Adoption Constraints**: Digital literacy levels among target user base
- **Data Constraints**: Accuracy dependent on user-provided information quality and also we can not get access to real data of crimes and criminals and also we can not get access of nadra data.

2.6 Stakeholder and User Description

2.6.1. Market Demographics

The target market comprises:

- **Primary Users**: Pakistani citizens aged 18-65 across urban and rural areas
- **Secondary Users**: Law enforcement personnel at district and provincial levels
- **Tertiary Users**: , judicial system stakeholders, and policy makers
- **Special Focus**: Women and marginalized communities facing reporting barriers.

2.6.2. User Environment

Users will access CRIMEX through:

- **Mobile Environment**: Android smartphones with internet connectivity
- **Web Environment**: Desktop and laptop computers in police stations and government offices
- **Network Conditions**: 3G/4G mobile networks and Wi-Fi connections.
- **Usage Scenarios**: Emergency reporting, routine case management, background verification

2.6.3. Stakeholder Profiles

2.6.3.1. Supervisor Team

Table 2: Supervisor Team

Aspect	Details
Representatives	Supervisor: Ms. Samia Aziz
Description	Academic supervisors providing technical guidance and project oversight
Type	Internal technical stakeholders with domain expertise
Responsibility	• Provide technical direction and methodology guidance. • Ensure project meets academic standards and timeline. • Review and approve major design decisions. • Monitor development progress and quality. • Facilitate resource allocation and problem resolution
Success Criteria	Successful completion of all committed features within academic timeline
Involvement	• Weekly progress reviews • Technical consultation • Documentation review and approval
Comments/ Issues	None identified at this stage

2.6.3.2. Development Team

Table 3: Development Team

Aspect	Details
Representatives	Zubair Ali (22P-9232), Muhammad Shakeel (22F-3404), Ali Hassan (22F-3405)
Description	Final year computer science students responsible for system development
Type	Internal technical stakeholders
Responsibility	• Complete system analysis, design, and implementation • Conduct comprehensive testing and quality assurance. • Prepare technical documentation and user manuals. • Implement security measures and performance optimization
Success Criteria	Delivery of fully functional system meeting all specified requirements
Involvement	• Full-time development and implementation • Research and technology evaluation. • User testing and feedback incorporation
Comments/Issues	Team members have complementary skills in mobile development, web technologies, and AI/ML

2.6.3.3. Citizens

Table 4: Citizens

Aspect	Details
Representatives	General Pakistani public, crime victims, witnesses, concerned citizens
Description	Primary end-users who will report crimes and verify criminal backgrounds
Type	External stakeholders and primary beneficiaries
Responsibility	• Report crimes accurately and provide truthful evidence • Use background verification responsibly and ethically • Provide feedback for system improvement
Success Criteria	Increased crime reporting rates and improved public safety awareness
Involvement	• Active system usage for crime reporting • Participation in user testing and feedback sessions
Comments/Issues	Diverse digital literacy levels require intuitive interface design

2.6.3.4. Law Enforcement Officers

Table 5: Law Enforcement Officers

Aspect	Details
Representatives	Police officers, investigators, station house officers (SHOs), superintendents
Description	Professional users responsible for case management and investigation
Type	Internal operational stakeholders
Responsibility	• Process and investigate reported crimes efficiently • Maintain case status updates and evidence integrity • Utilize system analytics for resource allocation • Ensure proper case closure and documentation
Success Criteria	Reduced case processing time and improved investigation efficiency
Involvement	• Case management operations • System training and adoption • Feedback on workflow optimization
Comments/Issues	Require training on digital case management workflows

2.6.3.5. System Administrator

Table 6: System Administrator

Aspect	Details
Representatives	Technical administrator, database administrator, security officer
Description	Technical personnel responsible for system maintenance and governance
Type	Internal technical stakeholders
Responsibility	• Manage user accounts and access permissions • Monitor system performance and security • Maintain data integrity and backup procedures
Success Criteria	99.5% system uptime and zero security breaches
Involvement	• Continuous system monitoring and maintenance • User support and technical assistance
Comments/Issues	• Requires expertise in cloud infrastructure and security management

2.6.4. Stakeholder Summary

Table 7: Stakeholder Summary

Stakeholder	Description	Primary Responsibility
Development Team	FYP students developing CRIMEX	Complete system development, testing, and documentation
Supervisor Team	Academic supervisors	Provide technical guidance and ensure project success
Citizens	Primary end-users of the platform	Report crimes and use background verification features
Law Enforcement	Police officers and investigators	Manage cases and conduct investigations efficiently
System Administrator	Technical maintenance personnel	Ensure system reliability, security, and performance

3. System Requirements Specification

3.1 System Features

CRIMEX offers comprehensive features including:

- **Secure Crime Reporting**: Multi-media evidence submission with GPS tracking and timestamp verification
- **Real-time Case Tracking**: Transparent workflow management with automated notifications
- **Criminal Background Verification**: CNIC and facial recognition-based background checks
- **Cryptographic Evidence Integrity**: cryptographic hashing of evidence
- **Geospatial Crime Analysis**: Hotspot identification and predictive modeling
- **Role-based Access Control**: Multi-tier security with audit trails
- **Performance Analytics**: Comprehensive reporting and data visualization
- **Mobile and Web Integration**: Cross-platform accessibility and synchronization

3.2 Functional Requirements

3.2.1. Mobile Application

ID	Description	Affected User/Users
FR-1	The mobile application shall allow users to create secure accounts using phone number and CNIC verification and OTP authentication.	Citizens
FR-2	The system shall enable users to report crimes by selecting from predefined categories including theft, harassment, fraud, assault, and domestic violence.	Citizens
FR-3	The mobile app shall capture GPS coordinates when a crime report is submitted, with manual location adjustment capability.	Citizens
FR-4	The system shall allow users to attach multimedia evidence including photos, videos, and audio recordings .	Citizens
FR-5	The mobile app shall implement end-to-end encryption for all evidence uploads using AES-256 encryption.	Citizens, System Administrator
FR-6	The system shall generate unique SHA-256 hashes for all uploaded evidence to ensure integrity verification.	Citizens, Law Enforcement Officers, System Administrator
FR-7	The mobile app shall provide real-time case status tracking with push notifications for status changes.	Citizens
FR-8	The mobile app shall allow users to verify criminal backgrounds using CNIC number input with result display.	Citizens
FR-9	The mobile app shall provide emergency reporting functionality with one-tap access and automatic location sharing.	Citizens

3.2.2. Web Dashboard

ID	Description	Affected User/Users
FR-10	The web dashboard shall provide role-based authentication for law enforcement officers with multi-factor authentication.	Law Enforcement Officers, System Administrator
FR-11	The web dashboard shall allow officers to update case status through predefined workflow stages: New → Triaged → Assigned → In Progress → Closed	Law Enforcement Officers, Citizen
FR-12	The system shall provide comprehensive case details view including evidence , location , and timeline .	Law Enforcement Officers
FR-13	The system shall generate and send automated notifications to citizens when case status is updated.	Law Enforcement Officers, Citizens
FR-14	The web dashboard shall provide real-time analytics dashboard showing case volumes, response times, and resolution rates.	Law Enforcement Officers,
FR-15	The system shall provide geospatial visualization of crime incidents with heat maps and cluster analysis.	Law Enforcement Officers
FR-16	The system shall allow station administrators to manually select an investigator for assignment or auto-assign based on workload balancing algorithms.	Law Enforcement Officers
FR-17	The web dashboard shall display individual officer workloads (e.g., number of open cases, average resolution time) to station administrator	Law Enforcement Officers

3.2.3. Administrative Panel

ID	Description	Affected User/Users
FR-18	The administrative panel shall provide comprehensive user management including account creation, modification, and deactivation.	System Administrator
FR-19	The system shall implement role-based permissions management with granular access control for different user types.	System Administrator
FR-20	The administrative panel shall provide criminal database management with CRUD operations for criminal records.	System Administrator , Law Enforcement Officers

3.2.4. AI Processing Engine

ID	Description	Affected User/Users
FR-21	The system shall perform facial recognition on uploaded photos to match against criminal databases.	Citizens, Law Enforcement Officers
FR-22	The AI engine shall analyze behavioral patterns across multiple cases to identify potential repeat offenders.	Law Enforcement Officers

3.3 Non-Functional Requirements

ID	Description
NFR-1	The system shall provide crime report submission confirmation within 10 seconds of user submission under normal conditions.
NFR-2	The platform shall support up to 50 concurrent users for testing .
NFR-3	The system shall process background verification requests and provide results within 30 seconds
NFR-4	The system shall implement bcrypt password hashing and HTTPS encryption for data transmission.
NFR-5	The system shall store all user personal data in encrypted form and provide data deletion functionality upon user request within 24 hours.
NFR-6	The mobile application shall be compatible with Android versions 7.0 and above for testing on available student devices.
NFR-7	The system shall implement role-based access control with 4 user roles (Citizen, Officer,Station Admin,System Admin) and maintain logs of all user login attempts and report submissions.
NFR-8	The system shall be developed as separate modules (Authentication, Crime Reporting, Case Management, AI Analysis) that can be independently tested and deployed.

4. Use Cases

4.1 Diagram

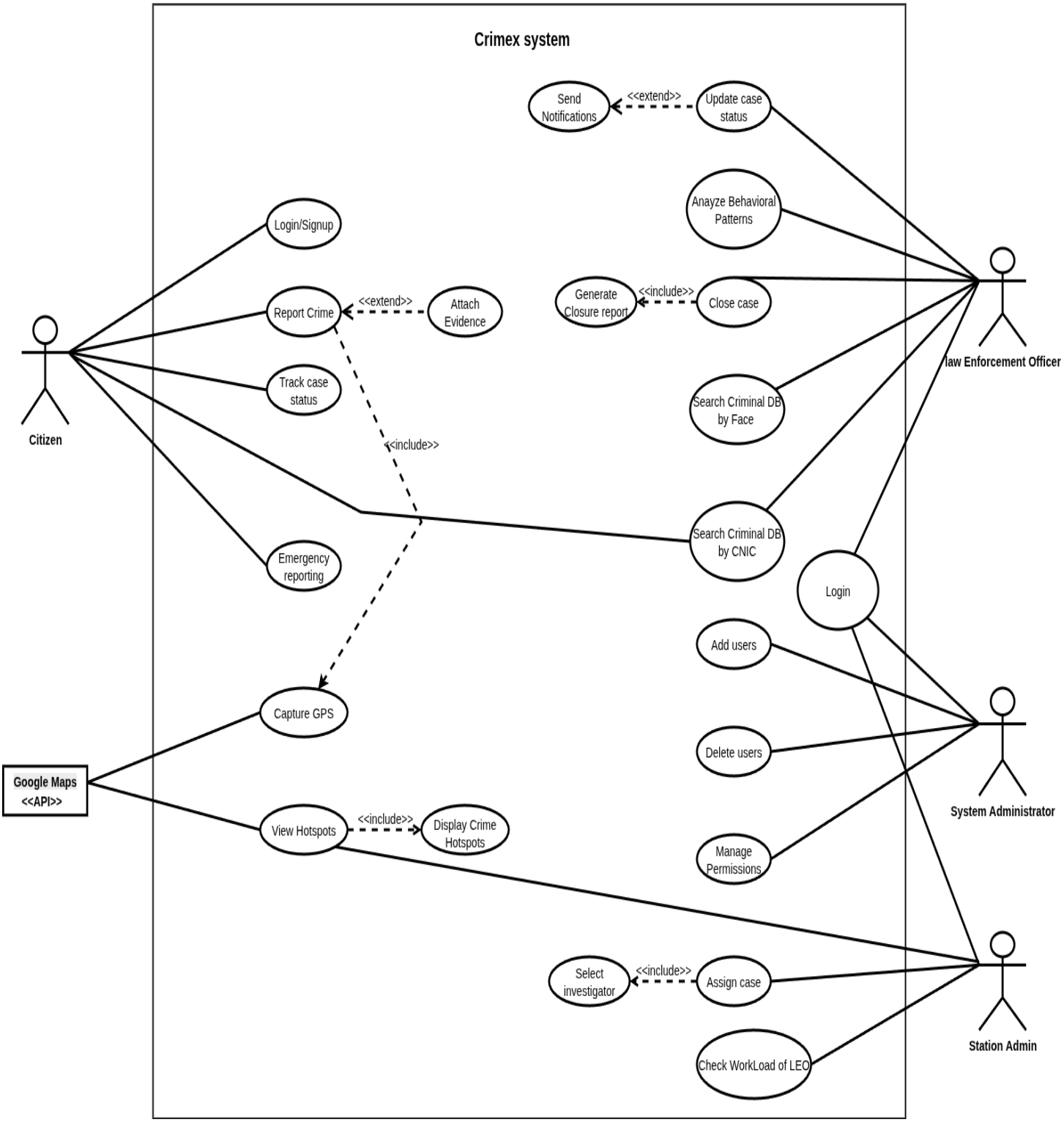

4.2 High Level Use Cases

4.2.1. Login / Signup

Field	Description
Use Case ID	UC-01
Use Case Name	Login / Signup
Actor	Citizen, Law Enforcement Officer, Station Admin, System Administrator
Use Case Type	Primary
Type Description	Enables secure user registration and authentication using CNIC, phone verification, and OTP. Ensures that only authorized roles can access CRIMEX services.

4.2.2. Report Crime

Field	Description
Use Case ID	UC-02
Use Case Name	Report Crime
Actor	Citizen
Use Case Type	Primary
Type Description	Allows citizens to submit detailed crime reports digitally with category selection, incident description, and evidence submission to law enforcement.

4.2.3. Attach Evidence

Field	Description
Use Case ID	UC-03
Use Case Name	Attach Evidence
Actor	Citizen
Use Case Type	Include
Type Description	Supports crime reporting by letting users attach photos, videos, or audio evidence securely using AES-256 encryption and hash verification.

4.2.4. Capture GPS

Field	Description
Use Case ID	UC-04
Use Case Name	Capture GPS
Actor	Citizen
Use Case Type	Include
Type Description	Automatically records the GPS coordinates of the reported incident, ensuring accurate location data for investigation and mapping.

4.2.5. Emergency Reporting

Field	Description
Use Case ID	UC-05
Use Case Name	Emergency Reporting
Actor	Citizen
Use Case Type	Extend
Type Description	Provides one-tap emergency submission extending the normal reporting flow, instantly sending location and alert to nearby authorities.

4.2.6. Track Case Status

Field	Description
Use Case ID	UC-06
Use Case Name	Track Case Status
Actor	Citizen
Use Case Type	Primary
Type Description	Allows citizens to monitor the investigation progress of their submitted reports, receiving automatic notifications for each update.

4.2.7. Assign Case

Field	Description
Use Case ID	UC-07
Use Case Name	Assign Case
Actor	Station Admin
Use Case Type	Primary
Type Description	Enables the station administrator to allocate cases to available investigators manually or through workload balancing automation.

4.2.8. Update Case Status

Field	Description
Use Case ID	UC-08
Use Case Name	Update Case Status
Actor	Law Enforcement Officer
Use Case Type	Primary
Type Description	Lets officers change case workflow stages (New → In Progress → Closed) and trigger notifications to the concerned citizen.

4.2.9. Close Case

Field	Description
Use Case ID	UC-09
Use Case Name	Close Case
Actor	Law Enforcement Officer
Use Case Type	Extend
Type Description	Final step in the investigation lifecycle; extends the case management process by marking the case as closed after verification.

4.2.10. Generate Closure Report

Field	Description
Use Case ID	UC-10
Use Case Name	Generate Closure Report
Actor	Law Enforcement Officer
Use Case Type	Include
Type Description	Generates a summary report including investigation details, evidence, and closure remarks for recordkeeping.

4.2.11. Manage Permissions

Field	Description
Use Case ID	UC-11
Use Case Name	Manage Permissions
Actor	System Administrator
Use Case Type	Primary
Type Description	Allows the administrator to control and modify user access levels, ensuring proper authorization boundaries between roles such as citizen, officer, and admin.

4.2.12. Add User

Field	Description
Use Case ID	UC-12
Use Case Name	Add User
Actor	System Administrator
Use Case Type	Primary
Type Description	Enables the creation of new user accounts in the system with defined roles and permissions for operational access.

4.2.13. Delete User

Field	Description
Use Case ID	UC-13
Use Case Name	Delete User
Actor	System Administrator
Use Case Type	Primary
Type Description	Removes existing user accounts and access credentials from the CRIMEX platform to maintain data security and role hygiene.

4.2.14. Check Workload of LEO

Field	Description
Use Case ID	UC-14
Use Case Name	Check Workload of LEO
Actor	Station Admin
Use Case Type	Include
Type Description	Provides the administrator with real-time workload analytics of law enforcement officers to support fair and efficient case assignments.

4.2.15. Search Criminal DB by CNIC

Field	Description
Use Case ID	UC-15
Use Case Name	Search Criminal DB by CNIC
Actor	Citizen, Law Enforcement Officer
Use Case Type	Primary
Type Description	Lets users verify an individual's background by searching the criminal database through CNIC input, returning verified results from secure records.

4.2.16. Search Criminal DB by Face

Field	Description
Use Case ID	UC-16
Use Case Name	Search Criminal DB by Face
Actor	Law Enforcement Officer
Use Case Type	Primary
Type Description	Employs facial recognition via AI engine to match an uploaded image against stored criminal records for quick background verification.

4.2.17. View Hotspots

Field	Description
Use Case ID	UC-17
Use Case Name	View Hotspots
Actor	Station Admin,Google Maps API
Use Case Type	Include
Type Description	Allows officers to access interactive map layers displaying active crime hotspots derived from geospatial analytics data.

4.2.18. Analyze Behavioral Patterns

Field	Description
Use Case ID	UC-18
Use Case Name	Analyze Behavioral Patterns
Actor	Law Enforcement Officer
Use Case Type	Primary
Type Description	Utilizes the AI engine to analyze behavioral trends and identify repeat offenders through pattern correlation across multiple cases.

4.2.19. Send Notifications

Field	Description
Use Case ID	UC-19
Use Case Name	Send Notifications
Actor	System (Automated Process)
Use Case Type	Include
Type Description	Automatically sends alerts and status updates to relevant users whenever a case stage changes, ensuring transparent communication.

4.3 Expanded Use Cases

4.3.1. Login / Signup

Use Case ID	UC-01
Use Case Name	Login / Signup
Actor	Citizen, Law Enforcement Officer, Station Admin, System Administrator
Description	Enables secure citizen's registration and authentication using CNIC, phone verification, and OTP. And ensures that only authorized personel roles can access CRIMEX services.
Priority	High
Criticality	Critical
Trigger Event	User navigates to the application and selects "Login" or "Sign Up".
Pre-Condition	User has a valid CNIC and mobile phone. The system is operational and for Police officer they have badge number and password.
Post-Condition	User is successfully authenticated and granted access to the system based on their role.
Main Scenario	1. Citizen provides CNIC and password (for Login) or CNIC, phone number, and sets a password (for Signup). 2. System validates the format. 3. For Signup, system sends an OTP to the provided mobile number. User enters OTP for verification. 4. System authenticates credentials. 5. User is logged in and redirected to their role-specific dashboard.

Use Case ID	UC-01
Alternative Scenario	Citizen selects "Forgot Password," enters CNIC, receives an OTP, and sets a new password.
Exceptional Scenario	Invalid CNIC, incorrect password, OTP expiration, or network failure. System displays an appropriate error message.
Frequency of use	Very Frequently (Multiple times daily).
Result	Secure registration and login, ensuring only authorized users access the CRIMEX platform.

4.3.2. Report Crime

Use Case ID	UC-02
Use Case Name	Report Crime
Actor	Citizen
Description	Allows citizens to submit detailed crime reports digitally with category selection, incident description, and evidence submission to law enforcement.
Priority	High
Criticality	High
Trigger Event	Citizen selects "Report a Crime" from their dashboard.
Pre-Condition	Citizen is successfully logged into the system (UC-01).
Post-	A new case is created with a unique tracking ID and is in

Use Case ID	UC-02
Condition	"New" status.
Main Scenario	1. Citizen selects the crime category from a predefined list. 2. Citizen enters the date, time, and description of the incident. 3. System automatically captures and attaches GPS location (UC-04). 4. Citizen attaches relevant evidence (UC-03). 5. Citizen reviews and submits the report. 6. System creates the case and provides a tracking ID to the citizen.
Alternative Scenario	Citizen uses the Emergency Reporting feature (UC-05) for immediate, high-priority incidents.
Exceptional Scenario	Form submission fails due to network issues. System saves a draft locally and prompts user to retry.
Frequency of use	Frequently (Daily).
Result	A digital crime report is successfully filed and entered into the law enforcement workflow.

4.3.3. Attach Evidence

Use Case ID	UC-03
Use Case Name	Attach Evidence
Actor	Citizen
Description	Supports crime reporting by letting users attach photos, videos, or audio evidence securely using AES-256 encryption

Use Case ID	UC-03
	and hash verification.
Priority	Medium
Criticality	Medium
Trigger Event	User selects the option to attach a file during the crime reporting (UC-02) process.
Pre-Condition	User is in the process of creating a crime report.
Post-Condition	The evidence file is securely uploaded, encrypted, and linked to the crime report.
Main Scenario	1. User selects "Attach Evidence". 2. User chooses to take a new photo/recording or select from their device's storage. 3. User selects the file. 4. System uploads the file, encrypts it (AES-256), and generates a hash for integrity. 5. System confirms the successful attachment.
Alternative Scenario	User can cancel the attachment process before the upload is complete.
Exceptional Scenario	File is too large, corrupted, or of an unsupported format. System displays an error and rejects the file.
Frequency of use	Frequently (Daily).
Result	Digital evidence is securely stored and associated with the relevant case.

4.3.4. Capture GPS

Use Case ID	UC-04
Use Case Name	Capture GPS
Actor	Citizen
Description	Automatically records the GPS coordinates of the reported incident, ensuring accurate location data for investigation and mapping.
Priority	Medium
Criticality	Medium
Trigger Event	User initiates a new crime report (UC-02).
Pre-Condition	User's device has location services enabled and has a GPS signal.
Post-Condition	The precise GPS coordinates (latitude, longitude) are captured and saved to the crime report.
Main Scenario	1. System requests location permissions (if not already granted). 2. User allows permission. 3. System retrieves the current GPS coordinates from the device. 4. Coordinates are automatically populated in a hidden field of the report form.
Alternative Scenario	User can manually enter the location if GPS is unavailable, but this is flagged for verification.
Exceptional	GPS signal is weak or unavailable. System prompts the user to

Use Case ID	UC-04
Scenario	enable location services or enter the address manually.
Frequency of use	Frequently (Daily).
Result	Accurate geolocation data is embedded in the crime report.

4.3.5. Emergency Reporting

Use Case ID	UC-05
Use Case Name	Emergency Reporting
Actor	Citizen
Description	Provides one-tap emergency submission extending the normal reporting flow, instantly sending location and alert to nearby authorities.
Priority	High
Criticality	Critical
Trigger Event	Citizen presses the "Emergency Report" button on the application's main screen.
Pre-Condition	Citizen is logged in (UC-01) and device location is enabled.
Post-Condition	A high-priority alert is created and broadcast to nearby law enforcement officers and the relevant station.
Main Scenario	1. Citizen taps the "Emergency Report" button. 2. System immediately captures the current GPS location

Use Case ID	UC-05
	(UC-04). 3. System creates a minimal-case alert with user details and location. 4. Alert is sent to all LEOs and the station admin in the vicinity. 5. System notifies the citizen that help has been alerted.
Alternative Scenario	The citizen can cancel the emergency report within a 5-second countdown.
Exceptional Scenario	No network connection. System repeatedly attempts to send the alert until successful.
Frequency of use	Occasionally.
Result	Immediate dispatch of a high-priority alert to law enforcement with the user's live location.

4.3.6. Track Case Status

Use Case ID	UC-06
Use Case Name	Track Case Status
Actor	Citizen
Description	Allows citizens to monitor the investigation progress of their submitted reports, receiving automatic notifications for each update.
Priority	High
Criticality	Medium

Use Case ID	UC-06
Trigger Event	Citizen navigates to "My Reports" or selects a specific report to view details.
Pre-Condition	Citizen is logged in (UC-01) and has at least one submitted crime report.
Post-Condition	Citizen views the current status and history of their case.
Main Scenario	1. Citizen accesses their list of submitted reports. 2. Citizen selects a specific case. 3. System displays the case details, including current status (e.g., New, In Progress, Closed), assigned officer (if any), and a timeline of updates. 4. Citizen reviews the information.
Alternative Scenario	Citizen receives an automatic push notification (UC-19) when the case status is updated, and taps it to view details directly.
Exceptional Scenario	Case data cannot be retrieved. System displays a "Data Unavailable" message.
Frequency of use	Frequently (Daily).
Result	Citizen is informed about the progress of their case, enhancing transparency and trust.

4.3.7. Assign Case

Use Case ID	UC-07
Use Case Name	Assign Case
Actor	Station Admin
Description	Enables the station administrator to allocate cases to available investigators manually or through workload balancing automation.
Priority	High
Criticality	High
Trigger Event	A new case appears in the station's queue, or a case needs reassignment.
Pre-Condition	Station Admin is logged in. There is at least one unassigned case and at least one available Law Enforcement Officer (LEO).
Post-Condition	The case is assigned to a specific LEO, and its status is updated to "In Progress".
Main Scenario	1. Station Admin views the list of unassigned cases. 2. Admin selects a case and clicks "Assign". 3. System suggests LEOs based on workload (UC-14). 4. Admin selects an LEO from the list. 5. System assigns the case to the LEO and triggers a notification (UC-19) to the officer.
Alternative Scenario	Admin uses the "Auto-Assign" feature, and the system automatically assigns the case to the LEO with the lightest workload.

Use Case ID	UC-07
Exceptional Scenario	No LEOs are available. System flags the case for manual assignment when an LEO becomes available.
Frequency of use	Frequently (Daily).
Result	Cases are efficiently distributed among law enforcement officers for investigation.

4.3.8. Update Case Status

Use Case ID	UC-08
Use Case Name	Update Case Status
Actor	Law Enforcement Officer
Description	Lets officers change case workflow stages (New → In Progress → Closed) and trigger notifications to the concerned citizen.
Priority	High
Criticality	High
Trigger Event	An LEO takes action on an assigned case (e.g., starts investigation, gathers new evidence, completes investigation).
Pre-Condition	LEO is logged in and has a case assigned to them.
Post-Condition	The case status is updated in the system, and the citizen is notified.
Main	1. LEO opens an assigned case from their dashboard.

Use Case ID	UC-08
Scenario	2. LEO changes the status field (e.g., from "Assigned" to "In Progress"). 3. LEO may add internal notes. 4. LEO saves the changes. 5. System records the update and triggers a notification to the citizen (UC-19).
Alternative Scenario	LEO uses the "Close Case" function (UC-09), which is a specific type of status update.
Exceptional Scenario	System fails to send the notification. The status update is still recorded, and the notification is queued for retry.
Frequency of use	Frequently (Daily).
Result	The case progression is documented, and the citizen is kept informed automatically.

4.3.9. Close Case

Use Case ID	UC-09
Use Case Name	Close Case
Actor	Law Enforcement Officer
Description	Final step in the investigation lifecycle; extends the case management process by marking the case as closed after verification.
Priority	High
Criticality	High

Use Case ID	UC-09
Trigger Event	An LEO has concluded the investigation and is ready to finalize the case.
Pre-Condition	The case is in "In Progress" status, and all necessary investigative actions are complete.
Post-Condition	The case status is set to "Closed". A closure report is generated (UC-10).
Main Scenario	1. From the case view, the LEO selects the "Close Case" action. 2. System prompts the officer to select a closure reason and add final remarks. 3. LEO provides the required information and confirms. 4. System updates the case status to "Closed". 5. System automatically triggers the "Generate Closure Report" use case (UC-10). 6. System notifies the citizen of the case closure (UC-19).
Alternative Scenario	The Station Admin can override and re-open a closed case if new evidence emerges.
Exceptional Scenario	Mandatory fields for closure are missing. System prevents closure and prompts the officer to complete them.
Frequency of use	Frequently (Daily).
Result	A case is formally concluded, and a final report is created for the record.

4.3.10. Generate Closure Report

Use Case ID	UC-10
Use Case Name	Generate Closure Report
Actor	Law Enforcement Officer
Description	Generates a summary report including investigation details, evidence, and closure remarks for recordkeeping.
Priority	Medium
Criticality	Medium
Trigger Event	A case is closed (UC-09).
Pre-Condition	A case has been marked as "Closed".
Post-Condition	A PDF closure report is generated and permanently attached to the case file.
Main Scenario	1. Triggered by UC-09. 2. System compiles the case data: initial report, collected evidence list, investigation notes, and closure remarks. 3. System formats this data into a standardized PDF document. 4. The PDF is saved to the case file and is non-editable.
Alternative Scenario	The LEO can manually trigger report generation from a closed case's page for printing or sharing.
Exceptional Scenario	Report generation fails due to a template error. System logs the error and alerts the system administrator.

Use Case ID	UC-10
Frequency of use	Frequently (Daily).
Result	A permanent, auditable record of the case and its resolution is created.

4.3.11. Manage Permissions

Use Case ID	UC-11
Use Case Name	Manage Permissions
Actor	System Administrator
Description	Allows the administrator to control and modify user access levels, ensuring proper authorization boundaries between roles such as citizen, officer, and admin.
Priority	Medium
Criticality	Critical
Trigger Event	System Admin needs to change a user's access rights, either during user creation or for an existing user.
Pre-Condition	System Admin is logged in. The target user account exists.
Post-Condition	The user's permissions are updated according to the changes made.
Main Scenario	1. System Admin searches for and selects a user. 2. Admin navigates to the "Permissions" tab for that user. 3. Admin edits the role or granular permissions (e.g., can close cases, can assign cases). 4. Admin saves the changes. 5. System applies the new permissions immediately.
Alternative Scenario	Admin applies a pre-defined role template (e.g., "Senior Officer") which sets a group of permissions at once.

Use Case ID	UC-11
Exceptional Scenario	Admin attempts to remove their own administrative privileges. System prevents this action to maintain at least one admin.
Frequency of use	Occasionally.
Result	User access controls are maintained, enforcing security and role-based access within the system.

4.3.12. Add User

Use Case ID	UC-12
Use Case Name	Add User
Actor	System Administrator
Description	Enables the creation of new user accounts in the system with defined roles and permissions for operational access.
Priority	Medium
Criticality	High
Trigger Event	A new employee (e.g., LEO, Station Admin) joins the force or a new citizen needs to be onboarded by an admin.
Pre-Condition	System Admin is logged in. The new user's details (CNIC, name, etc.) are available.
Post-Condition	A new user account is created and is ready for use.
Main Scenario	1. System Admin navigates to the User Management section and clicks "Add User".

Use Case ID	UC-12
	2. Admin enters the user's details: CNIC, Full Name, Phone Number, and selects a Role. 3. System validates the CNIC is unique. 4. Admin saves the new user. 5. System creates the account and sends a temporary password or setup link to the user's phone.
Alternative Scenario	Citizens self-register through the Signup process (UC-01), bypassing the need for admin creation.
Exceptional Scenario	The provided CNIC already exists in the system. System alerts the admin and prevents duplicate account creation.
Frequency of use	Occasionally.
Result	A new user is successfully provisioned into the CRIMEX system.

4.3.13. Delete User

Use Case ID	UC-13
Use Case Name	Delete User
Actor	System Administrator
Description	Removes existing user accounts and access credentials from the CRIMEX platform to maintain data security and role hygiene.
Priority	Low
Criticality	High

Use Case ID	UC-13
Trigger Event	A user leaves the organization or should no longer have access to the system.
Pre-Condition	System Admin is logged in. The target user account exists.
Post-Condition	The user account is deactivated or deleted, and the user can no longer log in.
Main Scenario	1. System Admin searches for and selects the user. 2. Admin selects the "Delete User" action. 3. System requests confirmation, warning about the permanence of the action. 4. Admin confirms. 5. System deactivates the account and revokes all access tokens.
Alternative Scenario	Admin chooses "Deactivate" instead of "Delete," allowing for the user to be temporarily disabled and potentially reactivated later.
Exceptional Scenario	The user has open cases assigned to them. System prevents deletion and prompts the admin to reassign those cases first.
Frequency of use	Rarely.
Result	Former users lose system access, reducing the security attack surface.

4.3.14. Check Workload of LEO

Use Case ID	UC-14
Use Case Name	Check Workload of LEO
Actor	Station Admin
Description	Provides the administrator with real-time workload analytics of law enforcement officers to support fair and efficient case assignments.
Priority	Medium
Criticality	Medium
Trigger Event	Station Admin is in the process of assigning a case (UC-07) or views the station dashboard.
Pre-Condition	Station Admin is logged in. There are LEOs in the station.
Post-Condition	The admin has a clear view of each LEO's current caseload.
Main Scenario	1. Admin navigates to the "Assignment" or "Team" view. 2. System displays a list of LEOs with key metrics: number of active cases, cases closed this week, and a color-coded workload indicator (e.g., Low, Medium, High). 3. Admin uses this information to make manual assignment decisions.
Alternative Scenario	The system uses this data automatically to power the "Auto-Assign" feature in UC-07.
Exceptional Scenario	The analytics service is down. System displays a "Data Unavailable" message and falls back to a simple list of LEOs.
Frequency of use	Frequently (Daily).

Use Case ID	UC-14
Result	Enables balanced distribution of work among law enforcement officers, preventing burnout.

4.3.15. Search Criminal DB by CNIC

Use Case ID	UC-15
Use Case Name	Search Criminal DB by CNIC
Actor	Citizen, Law Enforcement Officer
Description	Lets users verify an individual's background by searching the criminal database through CNIC input, returning verified results from secure records.
Priority	High
Criticality	High
Trigger Event	User needs to check if a person has a criminal record.
Pre-Condition	User is logged in. The target CNIC number is known.
Post-Condition	The system returns a "Record Found" or "No Record Found" response.
Main Scenario	1. User navigates to the "Criminal Database Search" page. 2. User selects "Search by CNIC" and enters the 13-digit number. 3. System validates the CNIC format. 4. System queries the secure criminal database. 5. If a record exists, system returns a confirmation and basic details (e.g., name, photo, list of offenses) – the depth of detail depends on the user's role.

Use Case ID	UC-15
	6. If no record exists, system returns "No Record Found".
Alternative Scenario	LEO can use the "Search by Face" feature (UC-16) if CNIC is unknown.
Exceptional Scenario	The database is unreachable. System displays a "Service Unavailable" error.
Frequency of use	Frequently (Daily).
Result	A quick and reliable background check is performed using a unique national identifier.

4.3.16. Search Criminal DB by Face

Use Case ID	UC-16
Use Case Name	Search Criminal DB by Face
Actor	Law Enforcement Officer
Description	Employs facial recognition via AI engine to match an uploaded image against stored criminal records for quick background verification.
Priority	Medium
Criticality	High
Trigger Event	An LEO has a photo of a suspect but does not know their CNIC.
Pre-Condition	LEO is logged in. The criminal database contains facial

Use Case ID	UC-16
	profiles. The AI service is available.
Post-Condition	The system returns a list of potential matches with confidence scores.
Main Scenario	1. LEO navigates to the "Criminal Database Search" page. 2. LEO selects "Search by Face" and uploads a clear image. 3. System sends the image to the AI engine for processing. 4. AI engine analyzes the face and searches for matches in the database. 5. System displays the top potential matches (photos and names) with confidence percentages. 6. LEO can select a match to view the full criminal record.
Alternative Scenario	The search returns no high-confidence matches. The LEO can try again with a different image.
Exceptional Scenario	The uploaded image is of poor quality or does not contain a clear face. The AI engine fails to process it, and the system prompts the officer for a better image.
Frequency of use	Occasionally.
Result	Identification of a suspect without the need for CNIC, leveraging advanced facial recognition technology.

4.3.17. View Hotspots

Use Case ID	UC-17
Use Case Name	View Hotspots
Actor	Station Admin, Google Maps API
Description	Allows officers to access interactive map layers displaying active crime hotspots derived from geospatial analytics data.
Priority	Medium
Criticality	Medium
Trigger Event	Station Admin opens the "Crime Map" or "Analytics Dashboard".
Pre-Condition	Station Admin is logged in. The system has sufficient case data with location.
Post-Condition	The admin views a map with overlaid crime hotspot visualizations.
Main Scenario	1. Admin opens the crime map view. 2. System fetches recent case data and processes it for geospatial density. 3. System calls the Google Maps API to render the base map. 4. System overlays heatmap layers on top of the base map, highlighting areas with high crime concentration. 5. Admin can filter hotspots by crime type and time range.
Alternative Scenario	Nil

Use Case ID	UC-17
Exceptional Scenario	The Google Maps API is unavailable. The system displays a blank map with an error message.
Frequency of use	Frequently (Daily).
Result	Data-driven visualization of crime patterns, enabling proactive resource deployment and patrol planning.

4.3.18. Analyze Behavioral Patterns

Use Case ID	UC-18
Use Case Name	Analyze Behavioral Patterns
Actor	Law Enforcement Officer
Description	Utilizes the AI engine to analyze behavioral trends and identify repeat offenders through pattern correlation across multiple cases.
Priority	Low
Criticality	Medium
Trigger Event	An LEO is investigating a complex case and selects "Analyze Patterns" or the system automatically suggests a link.
Pre-Condition	The system contains multiple case records with detailed modus operandi (MO) data. The AI engine is running.
Post-Condition	The officer receives a report suggesting potential links between cases or identifying a potential repeat offender.
Main Scenario	1. From a case file, the LEO triggers the pattern analysis.

Use Case ID	UC-18
	2. System sends case details (MO, location, time, evidence) to the AI engine. 3. AI engine correlates this data with all other cases in the database. 4. System returns a list of potentially linked cases and a confidence score for the link. 5. LEO reviews the suggestions to guide the investigation.
Alternative Scenario	The system runs automated batch analysis overnight and proactively flags potential serial activities to station admins.
Exceptional Scenario	The AI engine returns a low-confidence result. The system reports "No strong patterns detected."
Frequency of use	Occasionally.
Result	Enhanced investigative capability through AI-powered analysis, helping to connect dots between seemingly unrelated crimes.

4.3.19. Send Notifications

Use Case ID	UC-19
Use Case Name	Send Notifications
Actor	System (Automated Process)
Description	Automatically sends alerts and status updates to relevant users whenever a case stage changes, ensuring transparent communication.
Priority	High

Use Case ID	UC-19
Criticality	Medium
Trigger Event	A predefined system event occurs (e.g., case status updated (UC-08), case assigned (UC-07), case closed (UC-09)).
Pre-Condition	The event has been logged in the system. The target user has notification permissions enabled.
Post-Condition	A notification is delivered to the user's device and/or email.
Main Scenario	1. A triggering event occurs within the system. 2. The system identifies the notification type and the recipient (e.g., the citizen for a status update, the LEO for a new assignment). 3. The system formats the notification message. 4. The system pushes the notification to the user's mobile app via a push notification service and/or sends an email. 5. The notification is logged in the system's notification history.
Alternative Scenario	The user has disabled push notifications. The system only sends an email.
Exceptional Scenario	The push notification service fails. The system retries the delivery several times before marking it as failed.
Frequency of use	Very Frequently (Constantly, as events occur).
Result	Users are kept informed in real-time about important events related to their cases and responsibilities.

5. Domain Model

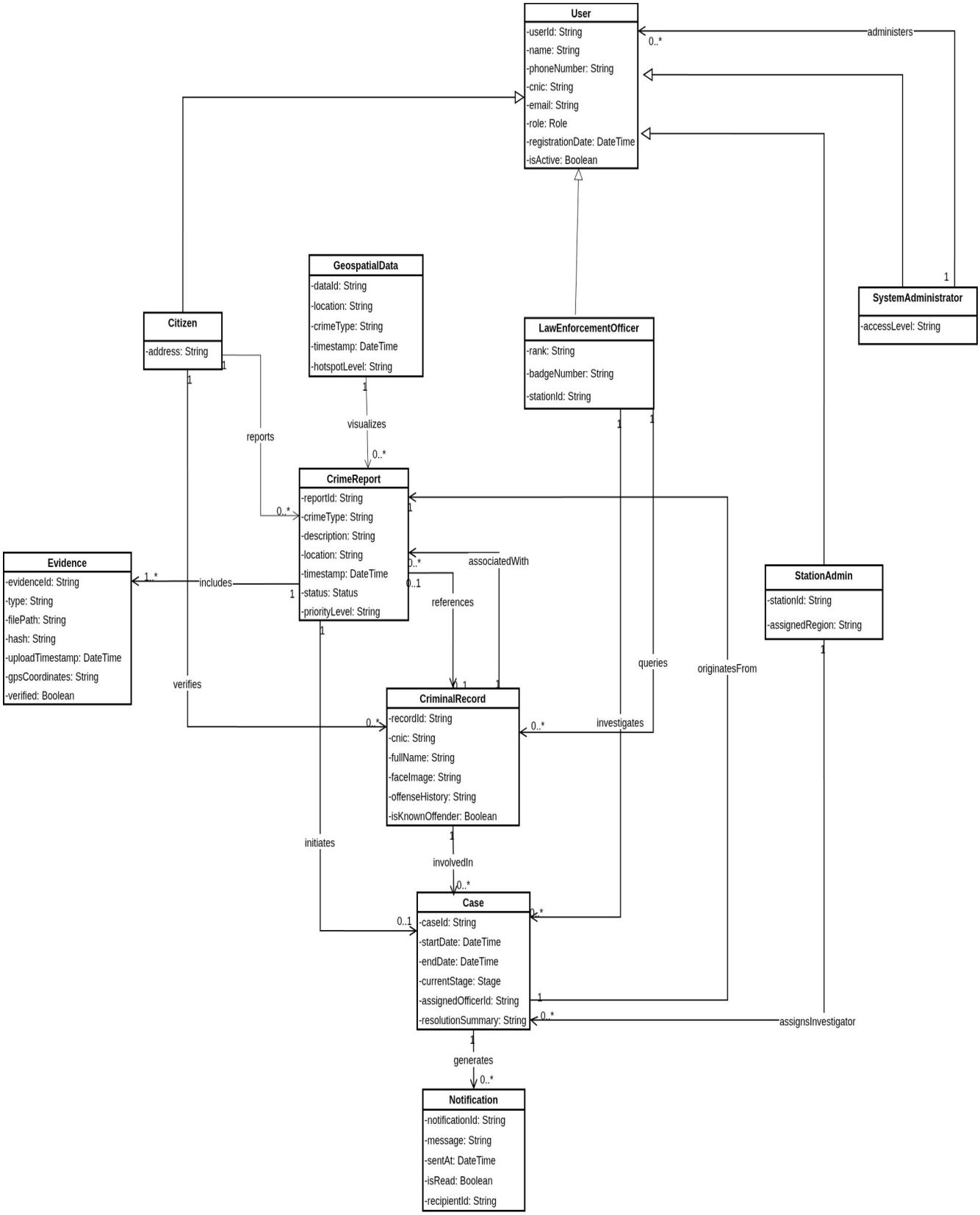

6. Class Diagram

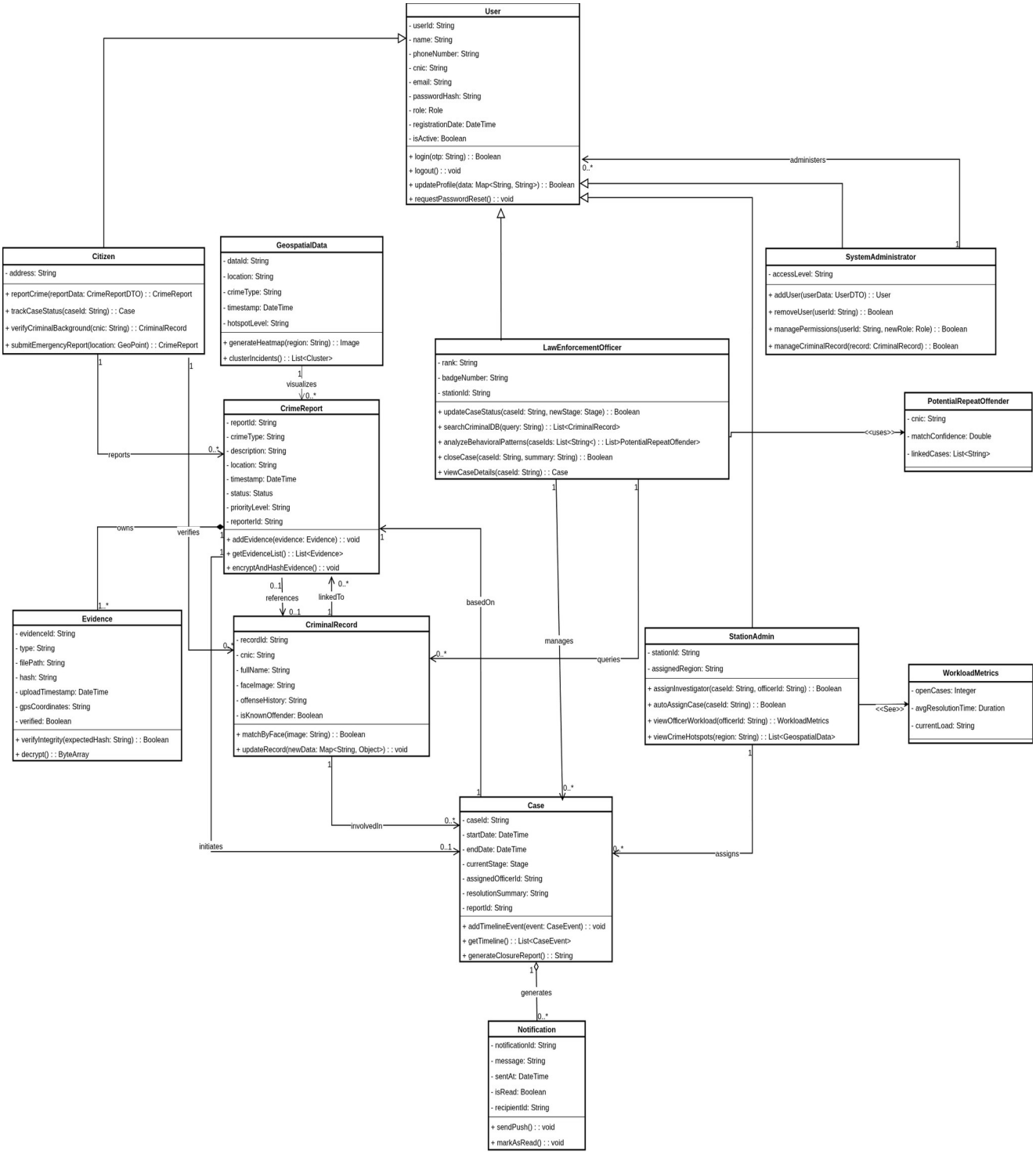

7. Entity Relationship Diagram

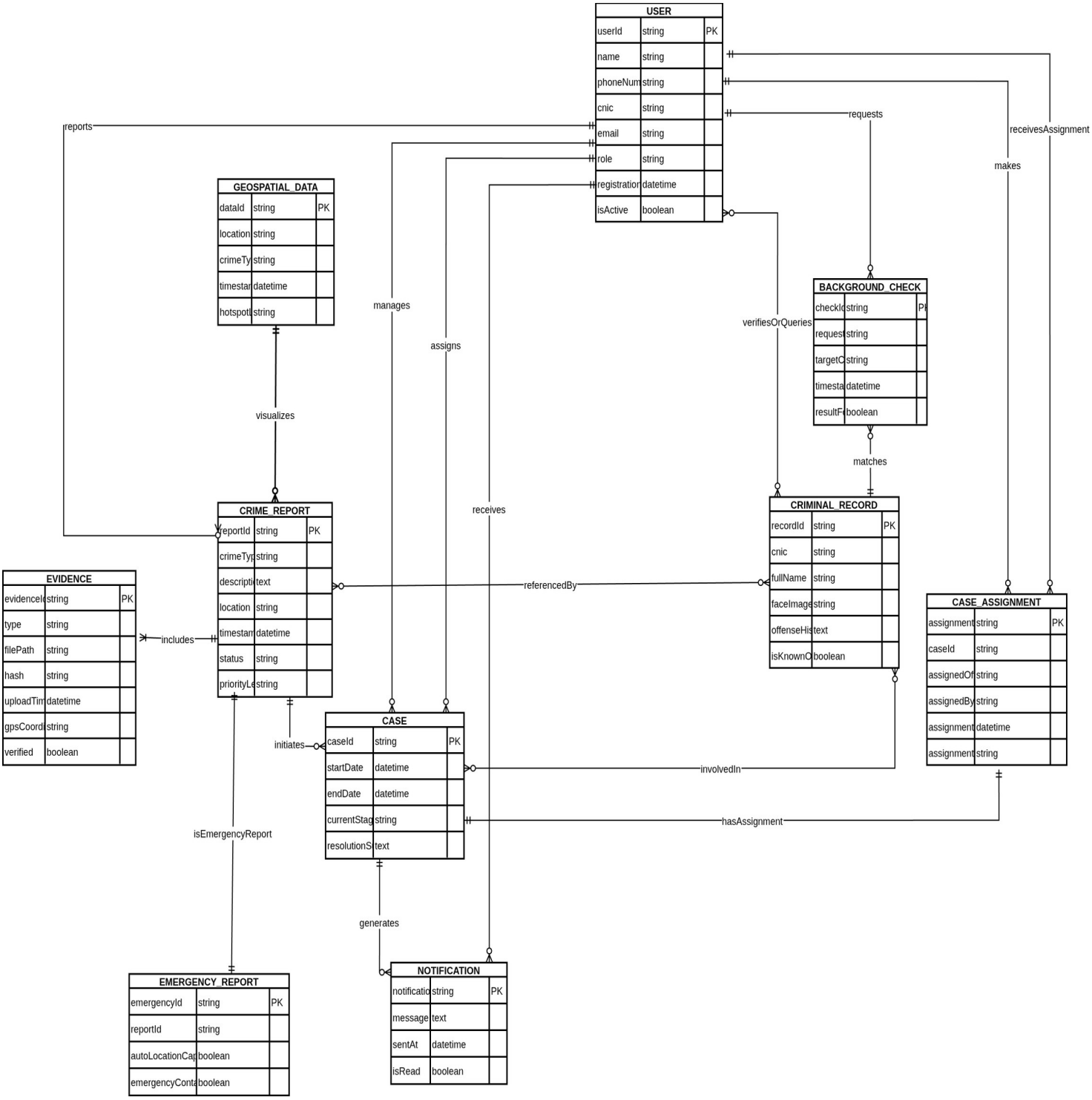

8. Activity Diagrams

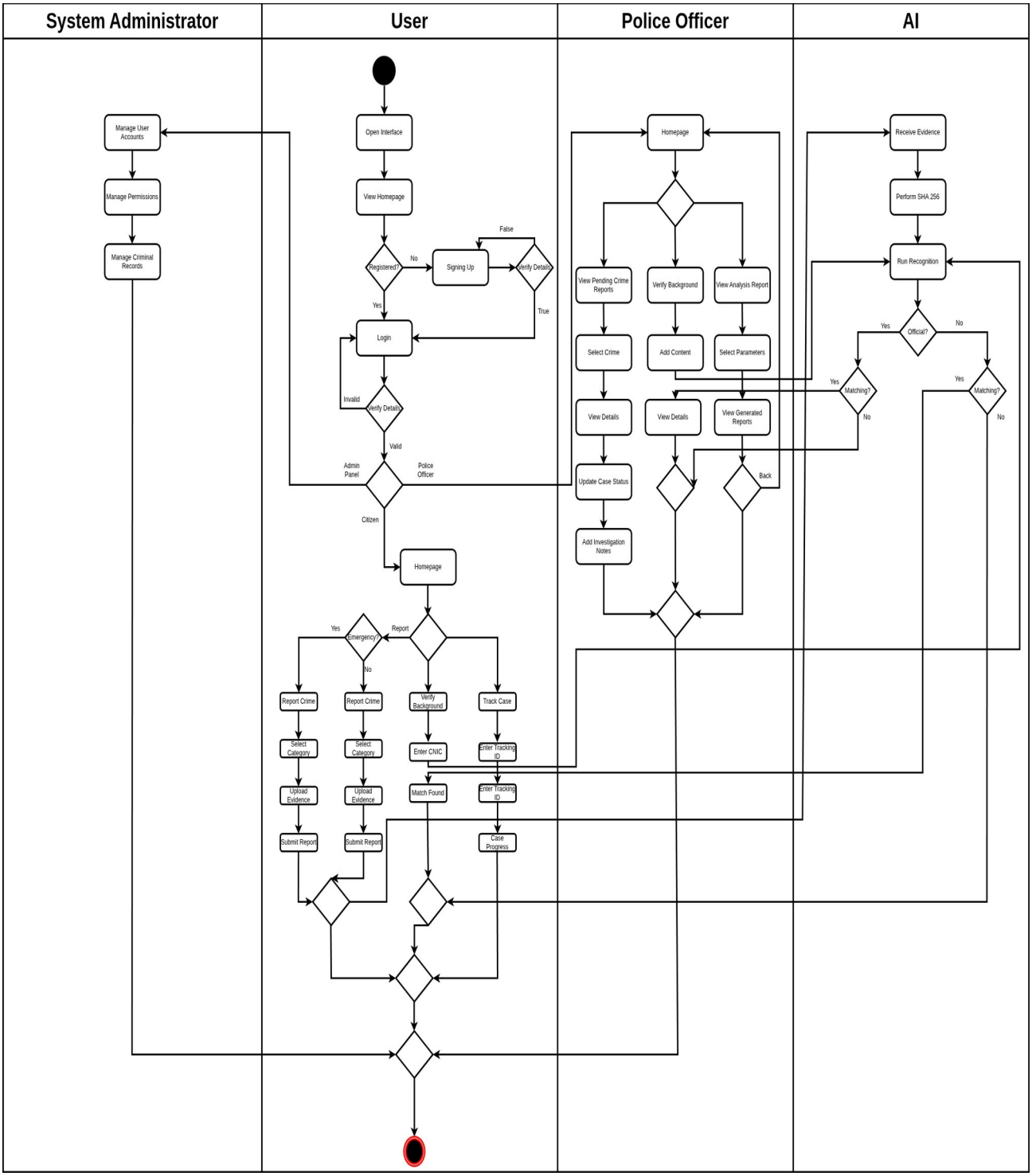

9. System Sequence Diagrams

9.1 Report Crime

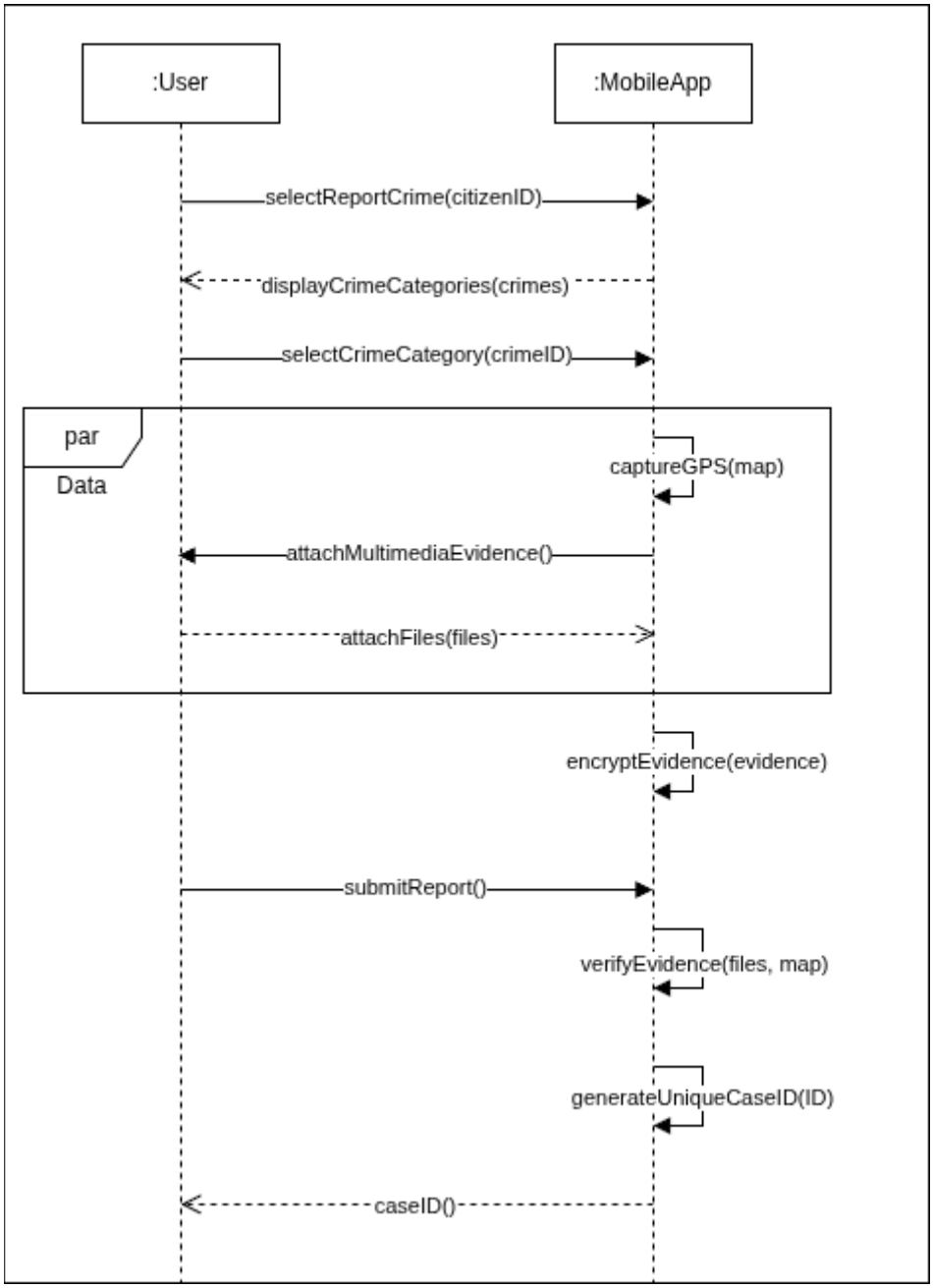

9.2 TrackCase

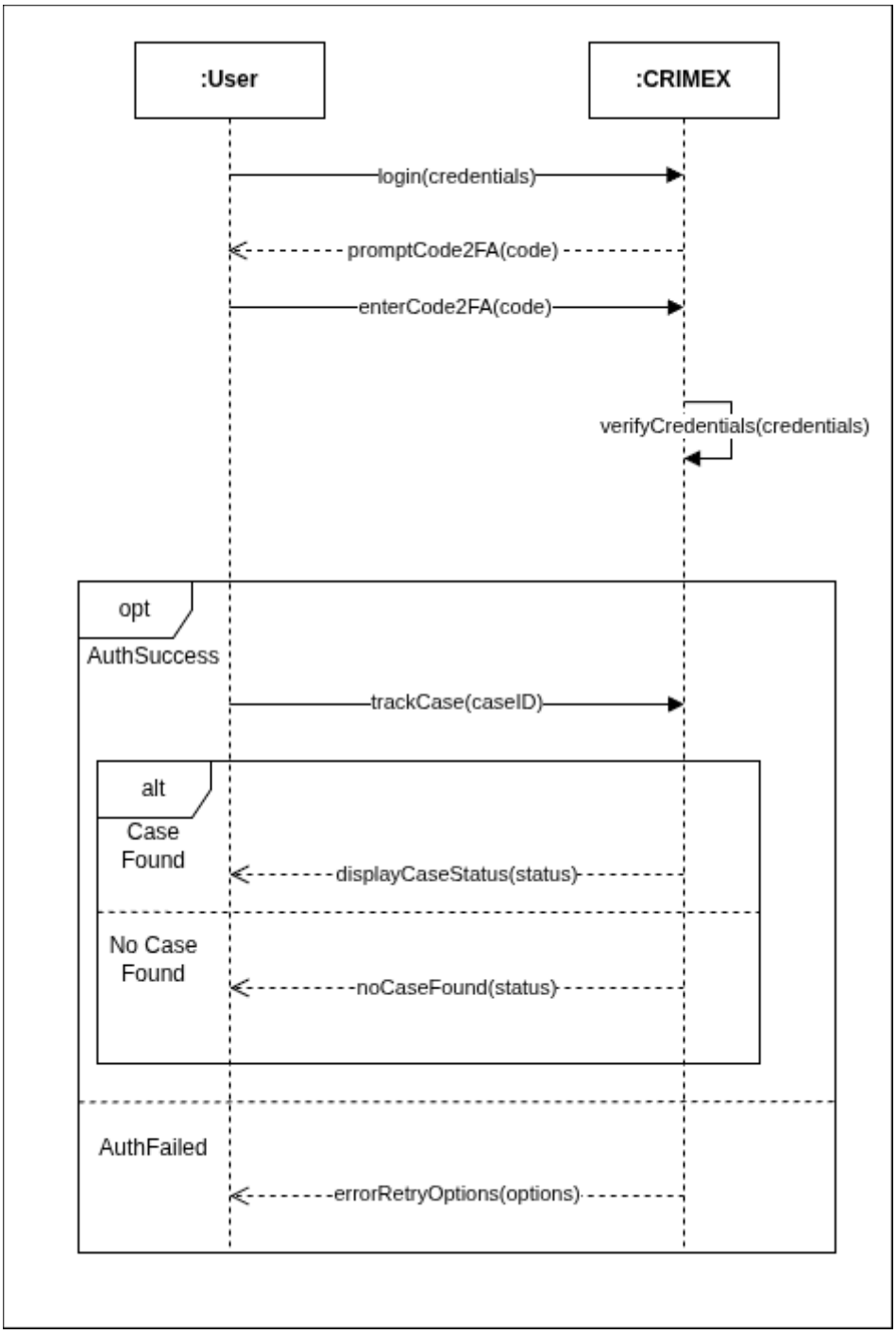

9.3 CaseManagement

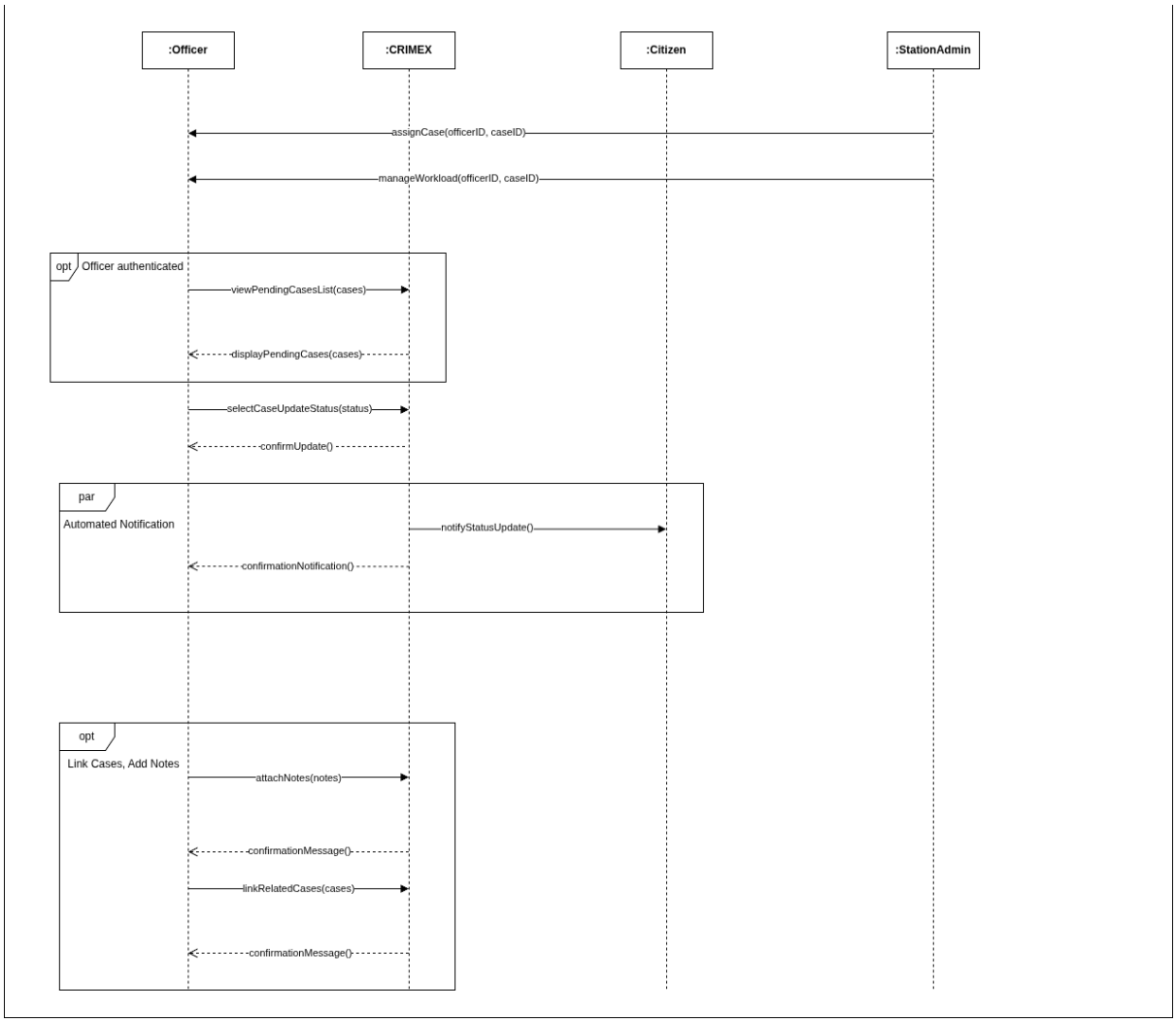

9.4 Background Verification

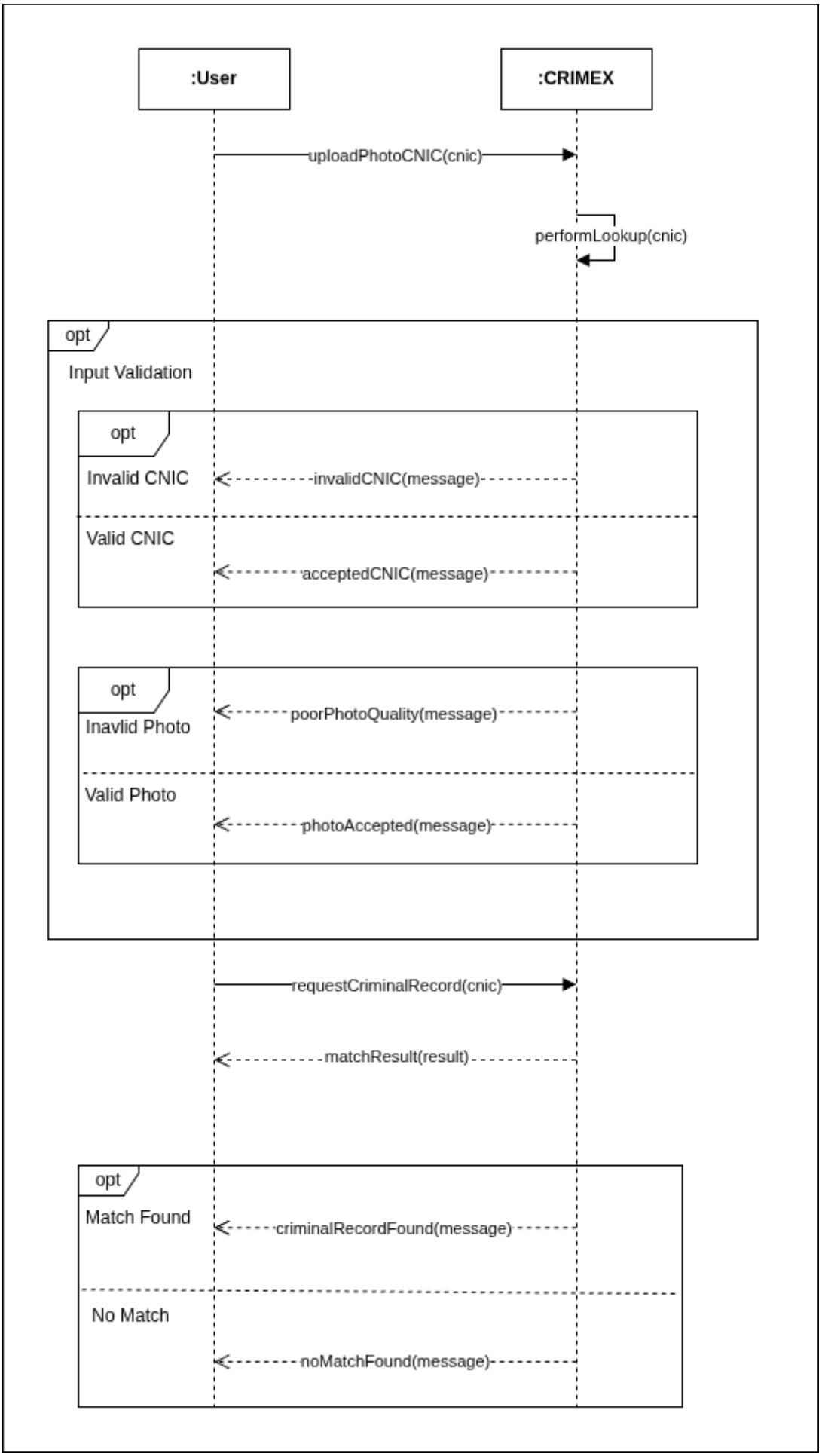

9.5 Geospatial Crime Analytics

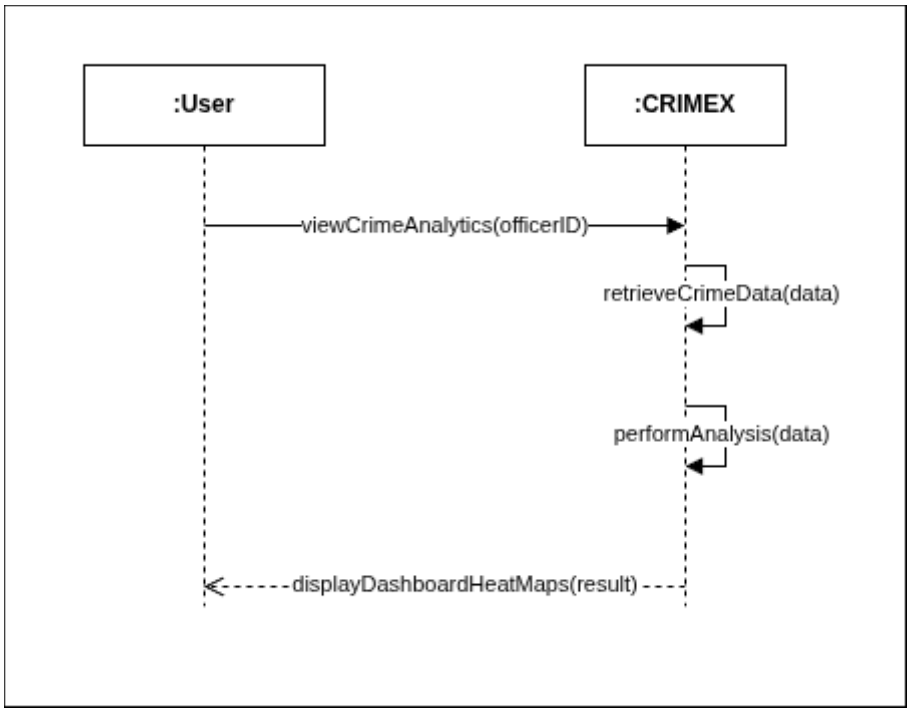

9.6 User Management

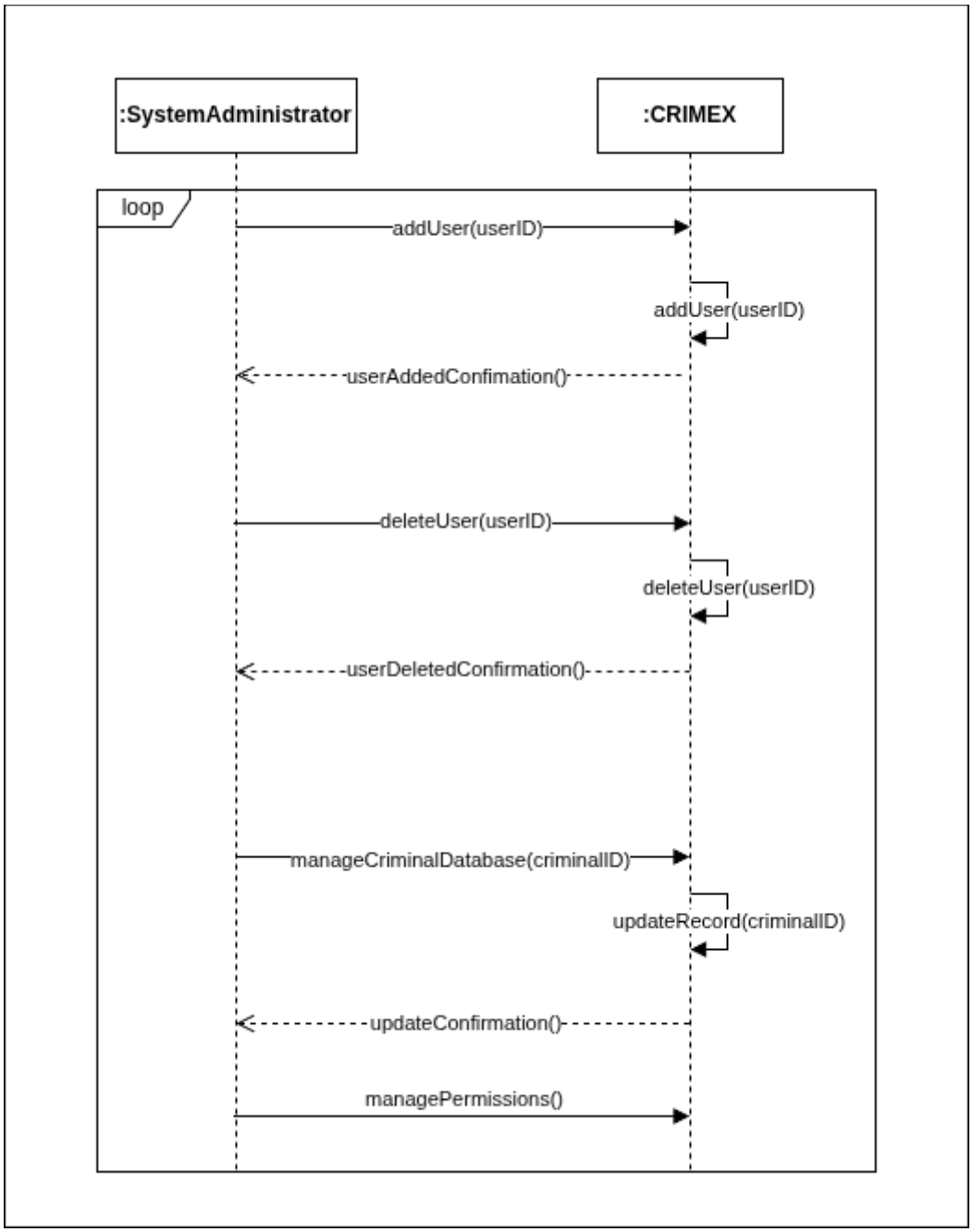

9.7 Registration:

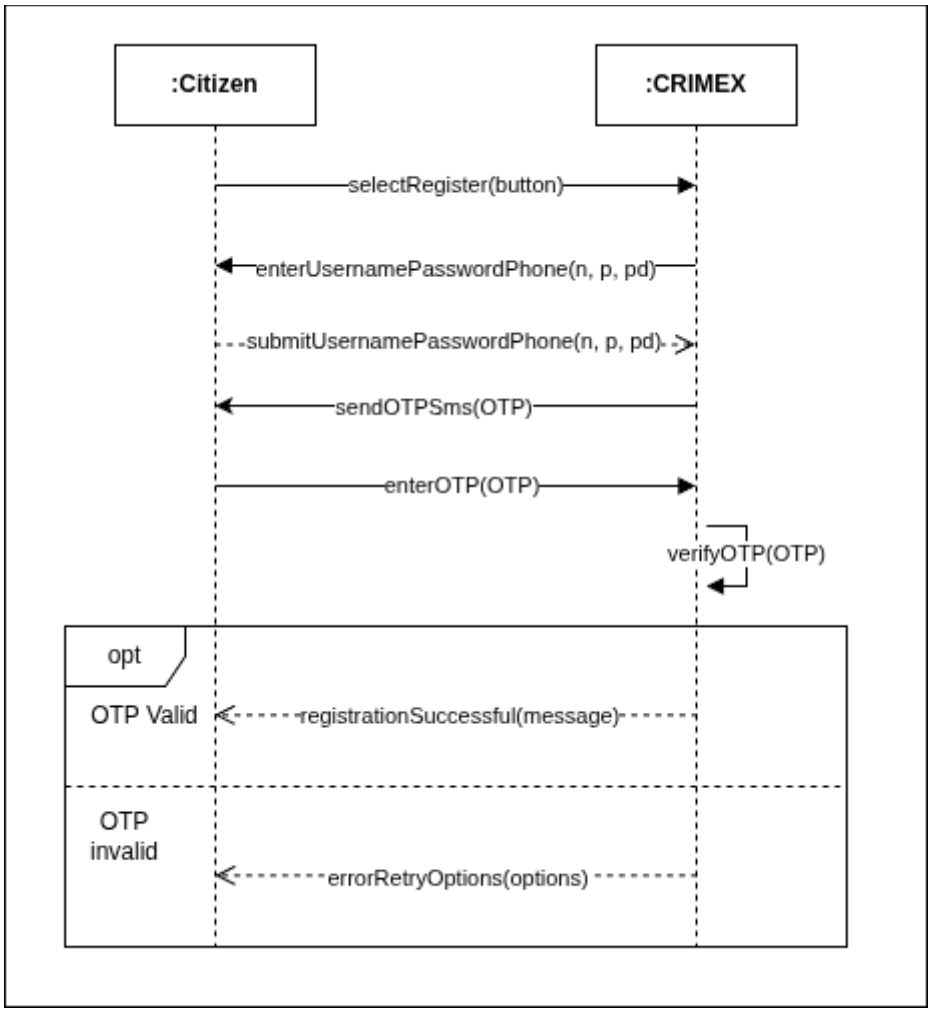

9.8 Emergency Reporting

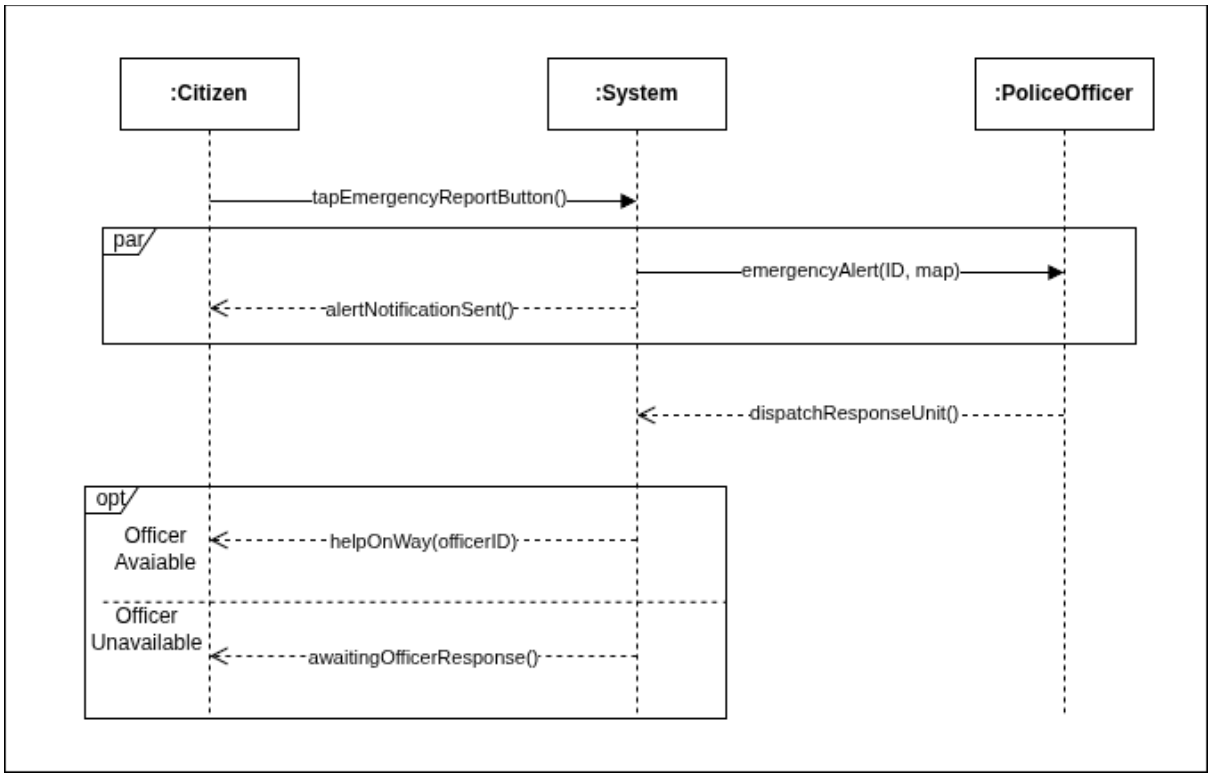

10. Component Diagram

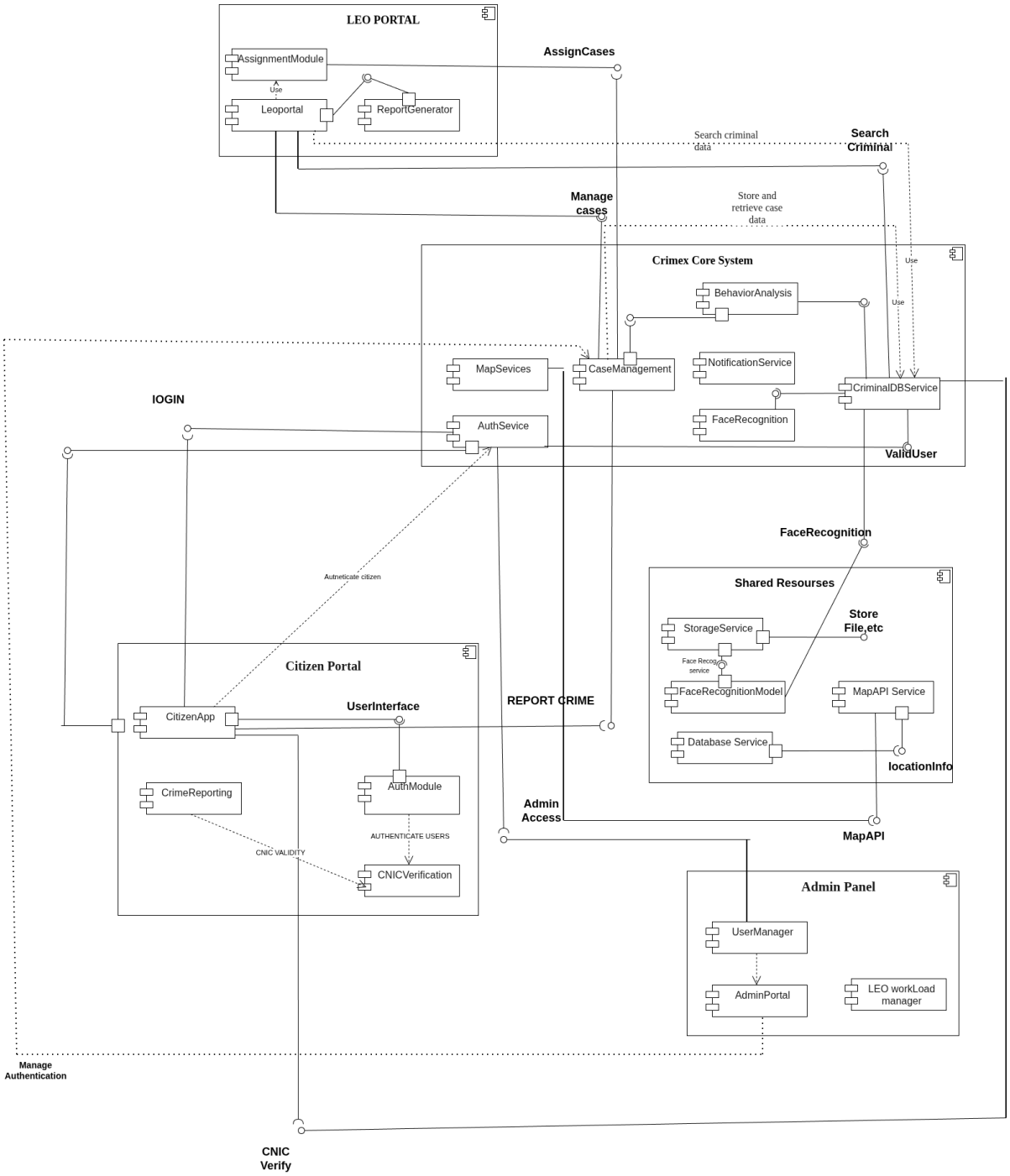

11. Data Flow Diagram

11.1 Level 0

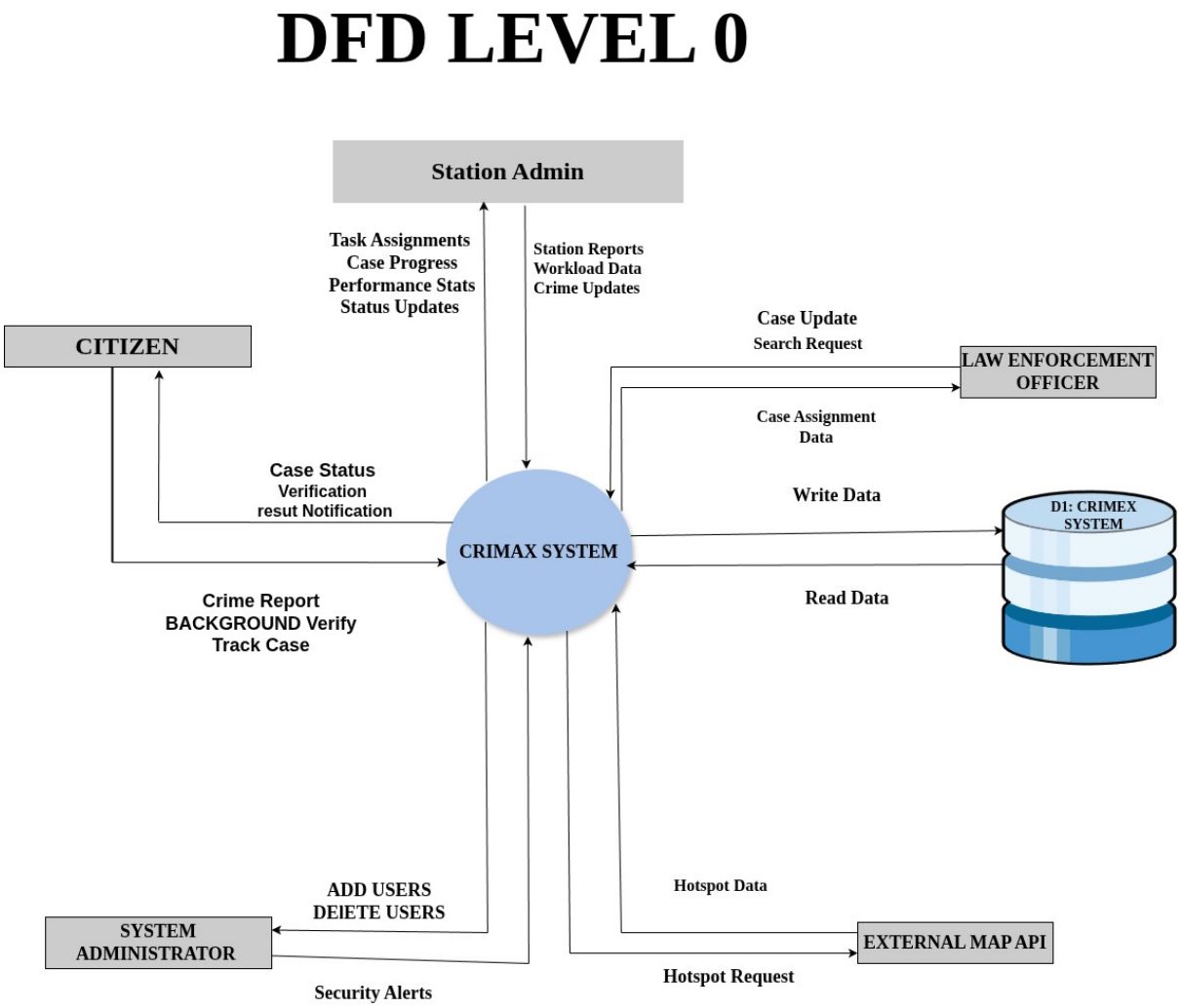

11.2 Level 1

DFD LEVEL 1

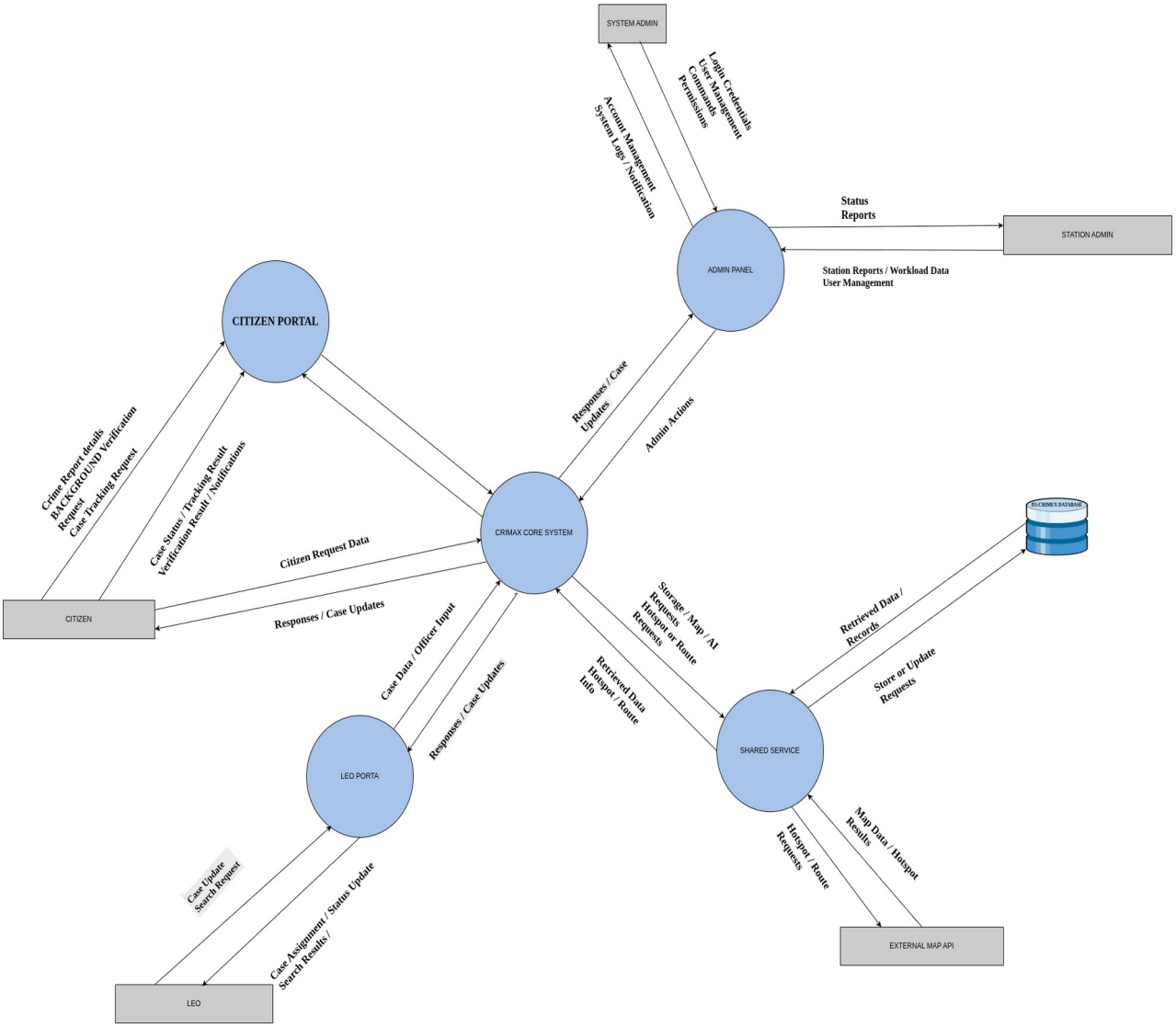

11.3 Level 2

11.3.1. Citizen

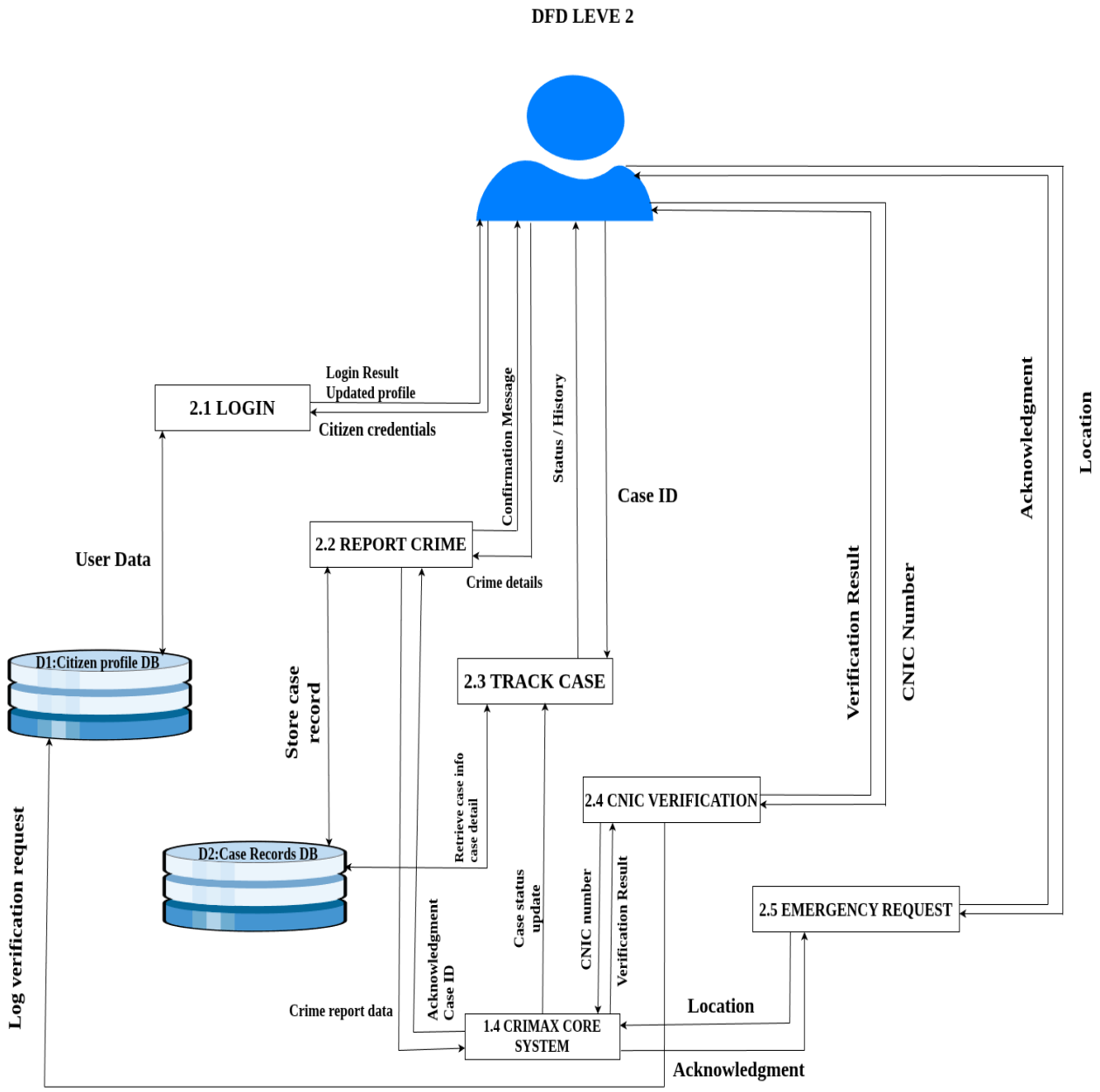

11.3.2. LEO Portal

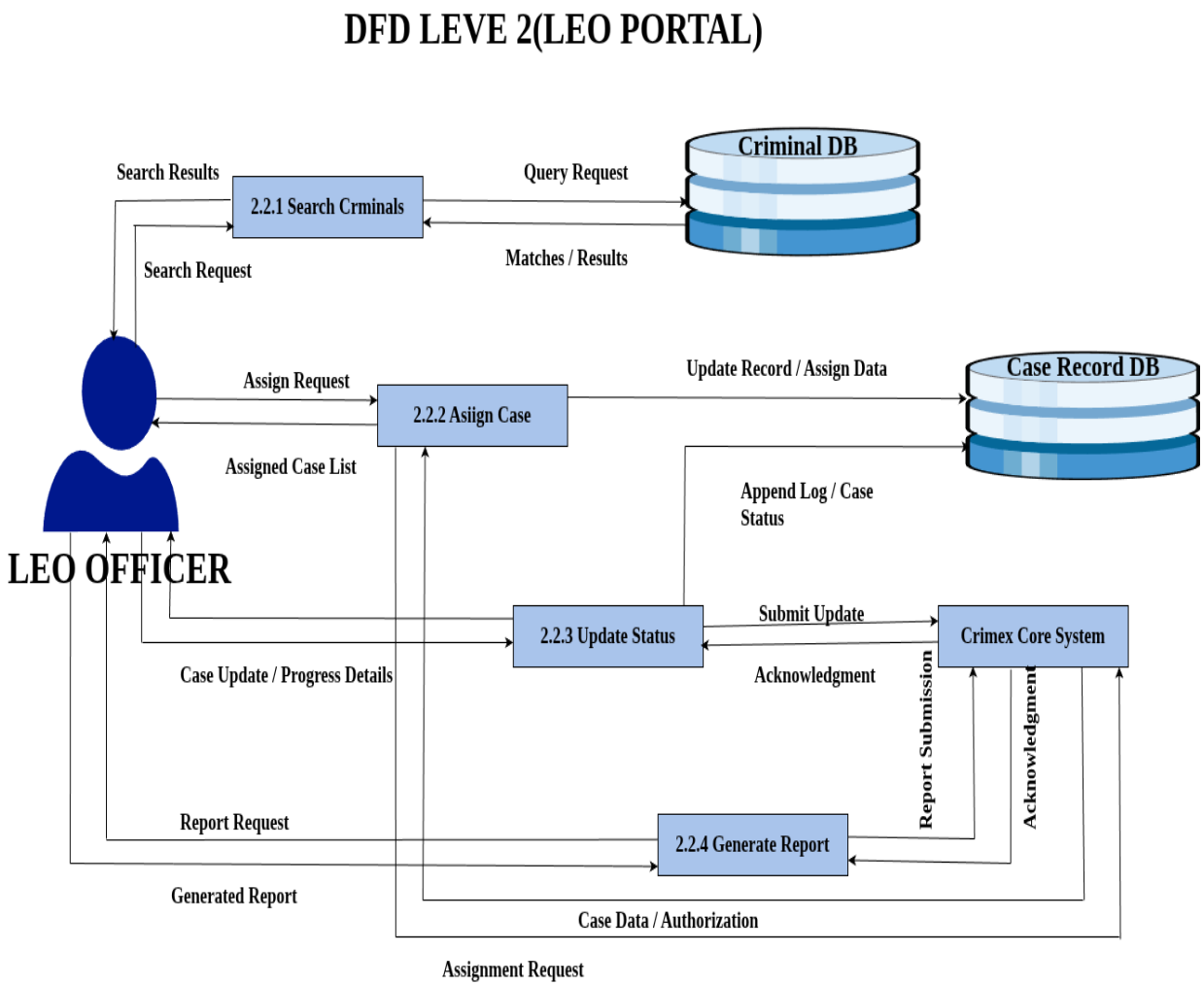

11.3.3. Admin Panel

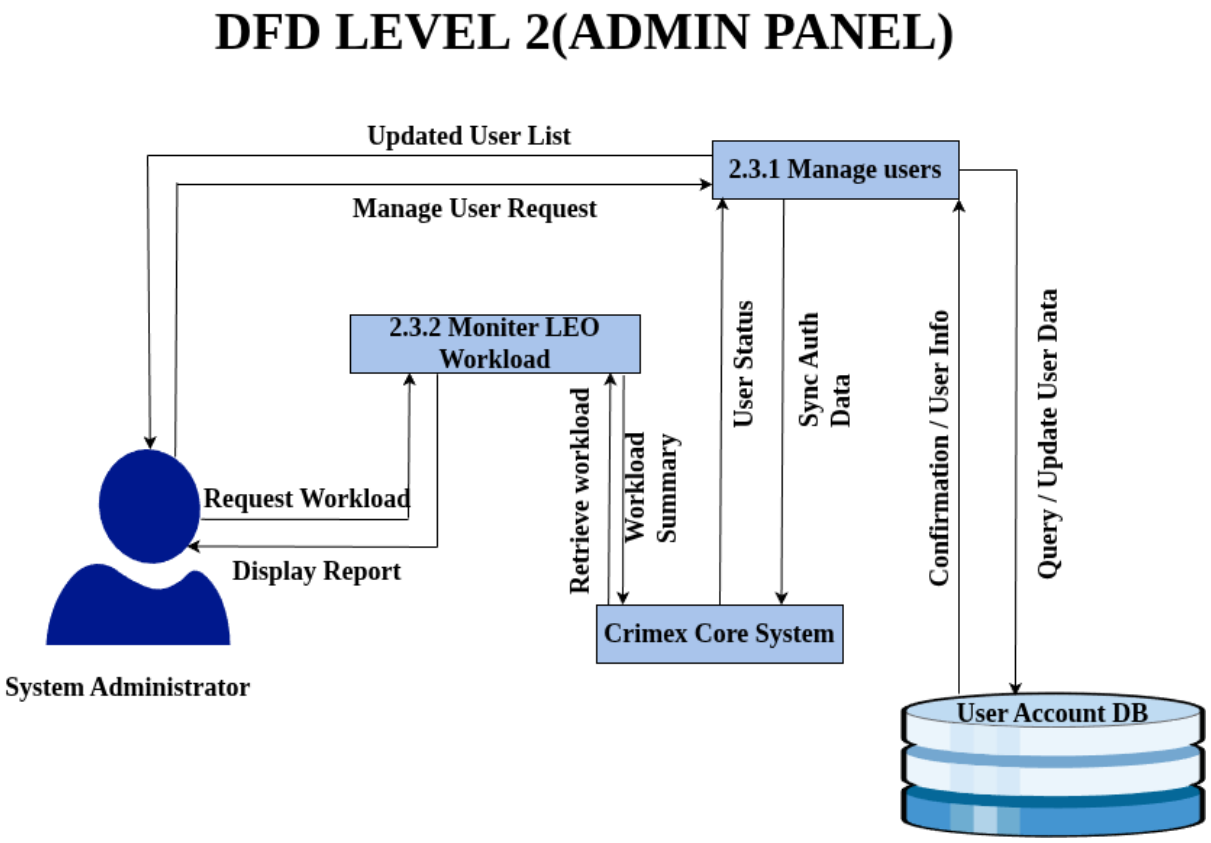

11.3.4. Shared Services

DFD LEVEL 2(Shared Services)

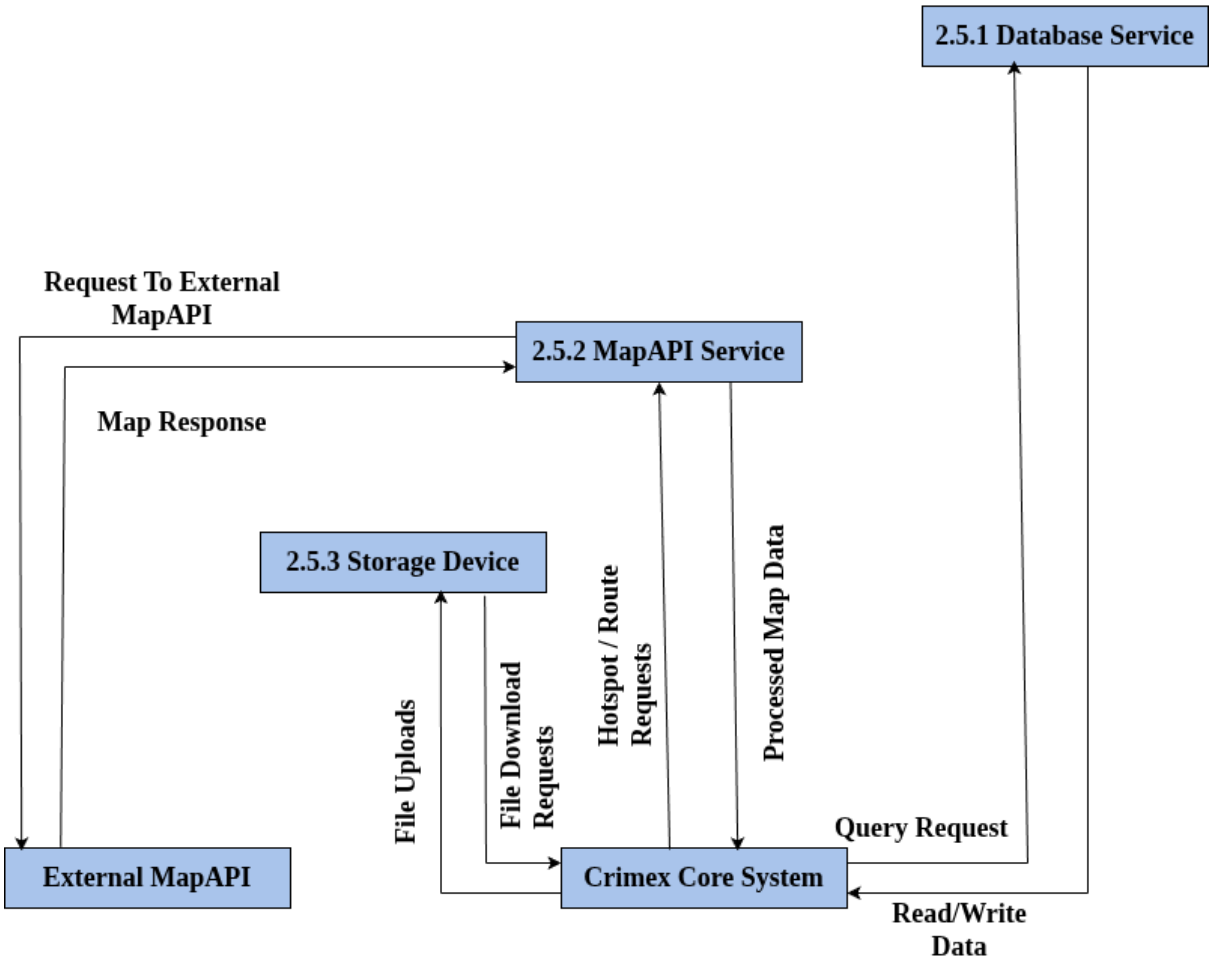
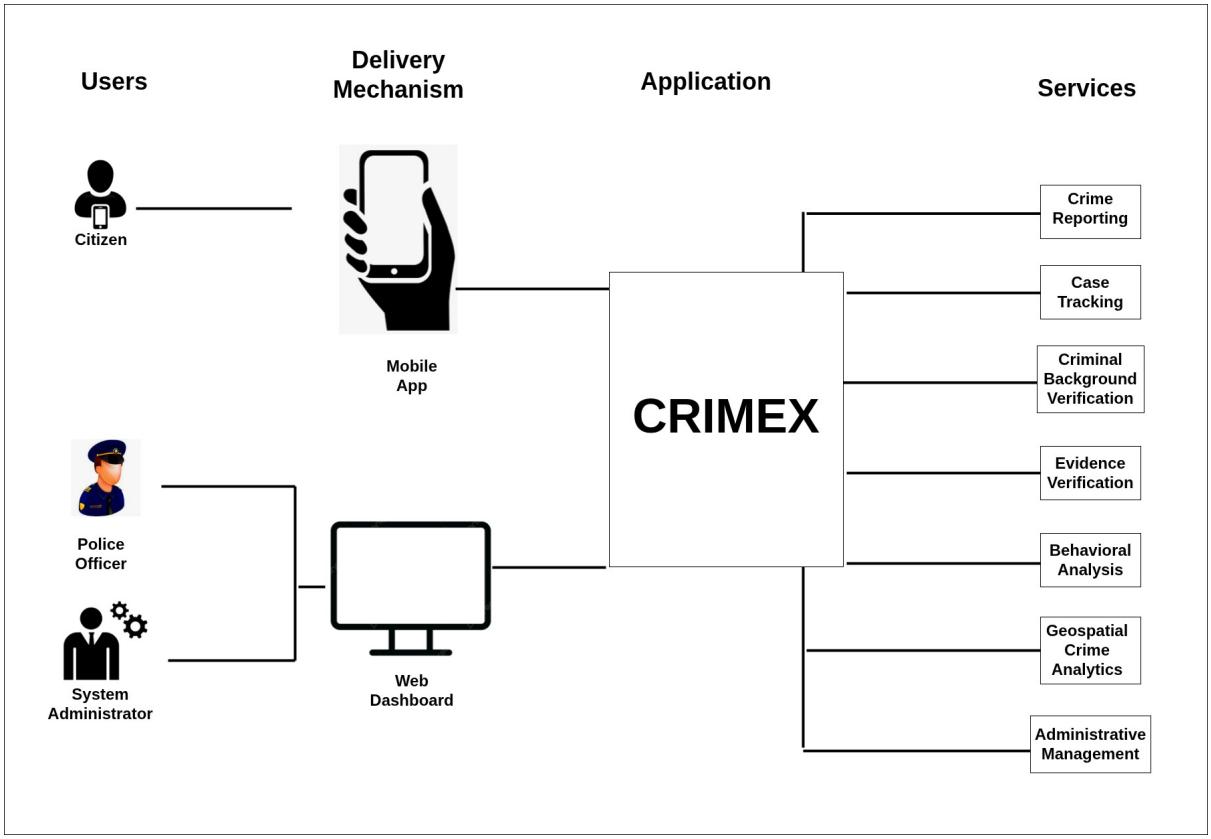
12. Architecture Diagram