LAYOUT DIAGRAM OF 500kV CONTROL PANEL TYPE =B06+WC1 (LINE + TRAFO)

APPROVED	CHECKED	DRAWN	PROJECT:	TITLE:		DWG# EPE/ENU-18/B61568	SHT: 01OF 03
NAH	MSS	MUR	EDUCATIONAL ORDER NTDC PO# CE/MP&M /M(P)/AM-VI/EO/9417-29 DATED 14.11.2018 FOR THE PROCUREMENT OF 220KV & 500KV RELAY& CONTROL PANELS	COVER SHEET 500kV CONTROL PANEL TYPE =B06+WC1	EPESOL Pvt. Ltd. 71-B Garden Block, New Garden Town, Lahore, Pakistan	DATE: 07.03.2019 AS BUILT	REV: 0

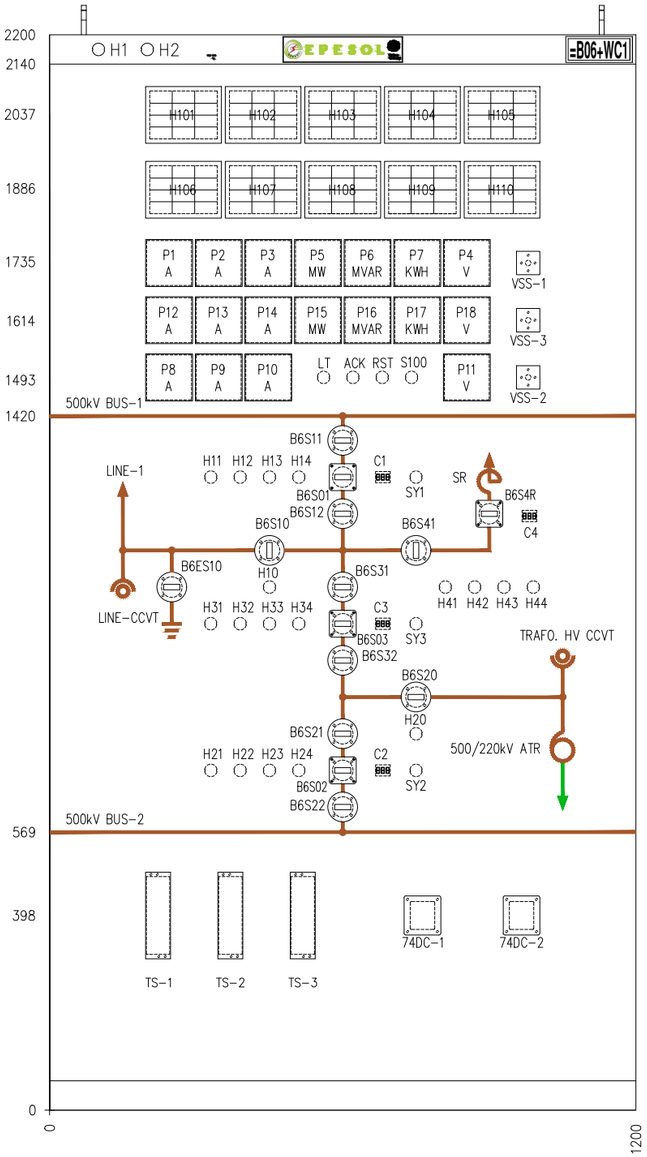

FRONT SIDE VIEW

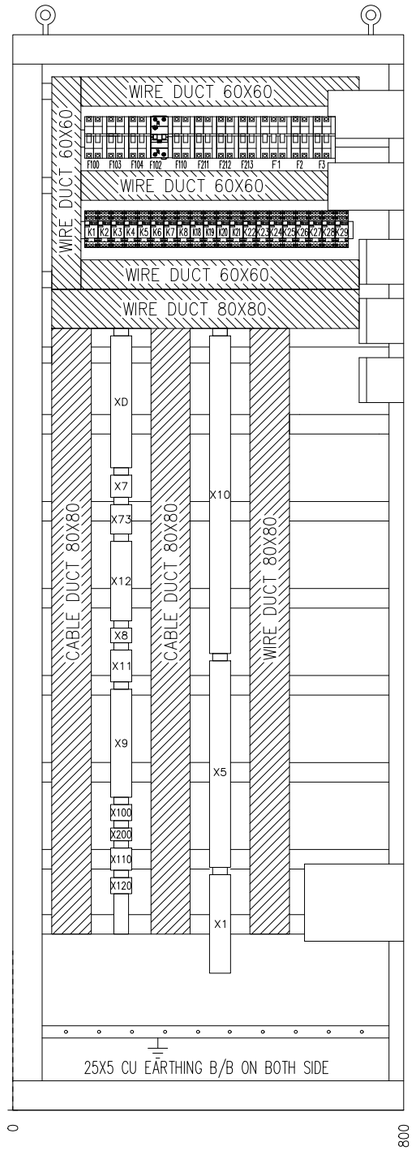

LEFT SIDE VIEW

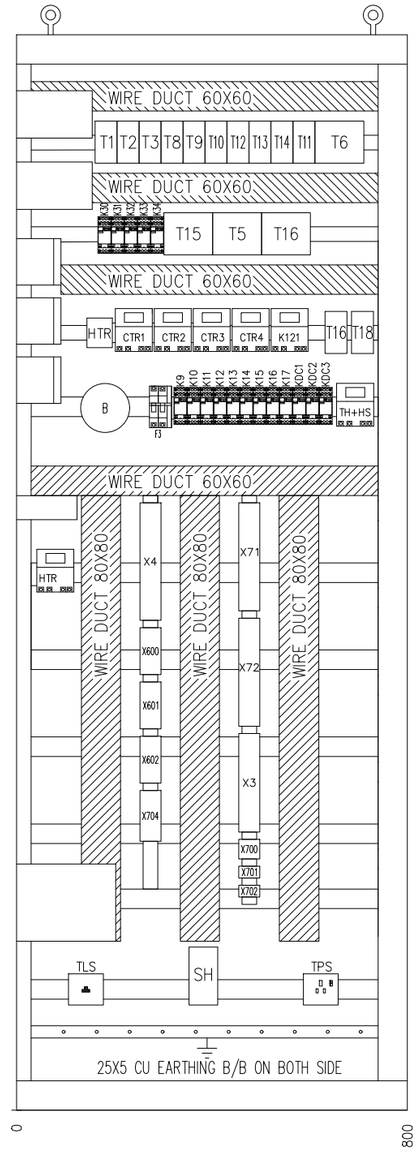

RIGHT SIDE VIEW

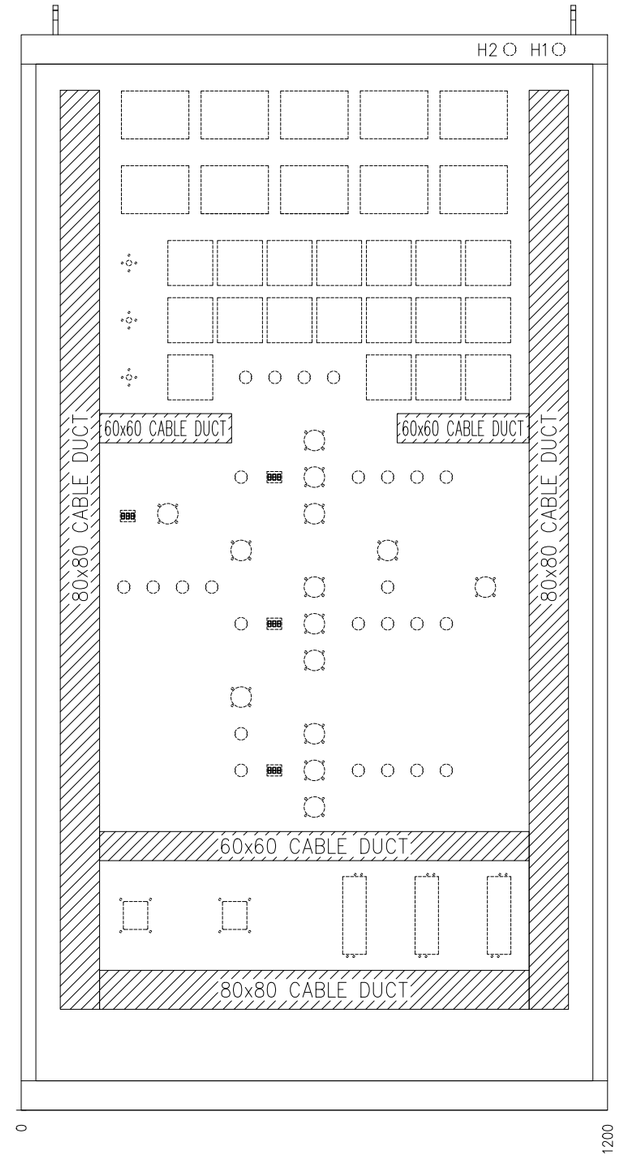

BACK SIDE VIEW
FOR FIXING OF CABLE DUCT

NOTES

1. CONTROL PANEL: 1200(W)x800(D)x2200(H) mm
2. FACE SHEET: 1200x2200 mm
3. EARTHING STRIP 25x5 mm
4. EARTHING STRAP 16mm^2
5. COLOR: RAL7032
6. PROTECTION CLASS: IP51
7. APPLICABLE SPECS: P-204:2008
8. MIMIC COLOR: ORANGE BROWN FOR 500kV
   GREEN FOR 220kV

APPROVED	CHECKED	DRAWN	PROJECT:	TITLE:		DWG# EPE/ENU-18/B61568	SHT: 02OF 03
NAH	MSS	MUR	EDUCATIONAL ORDER NTDC PO# CE/MP&M /M(P)/AM-VI/EO/9417-29 DATED 14.11.2018 FOR THE PROCUREMENT OF 220KV & 500KV RELAY& CONTROL PANELS	LAYOUT DIAGRAM 500kV CONTROL PANEL TYPE =B06+WC1	EPESOL Pvt. Ltd. 71-B Garden Block, New Garden Town, Lahore, Pakistan	DATE: 07.03.2019	AS BUILT / REV: 0

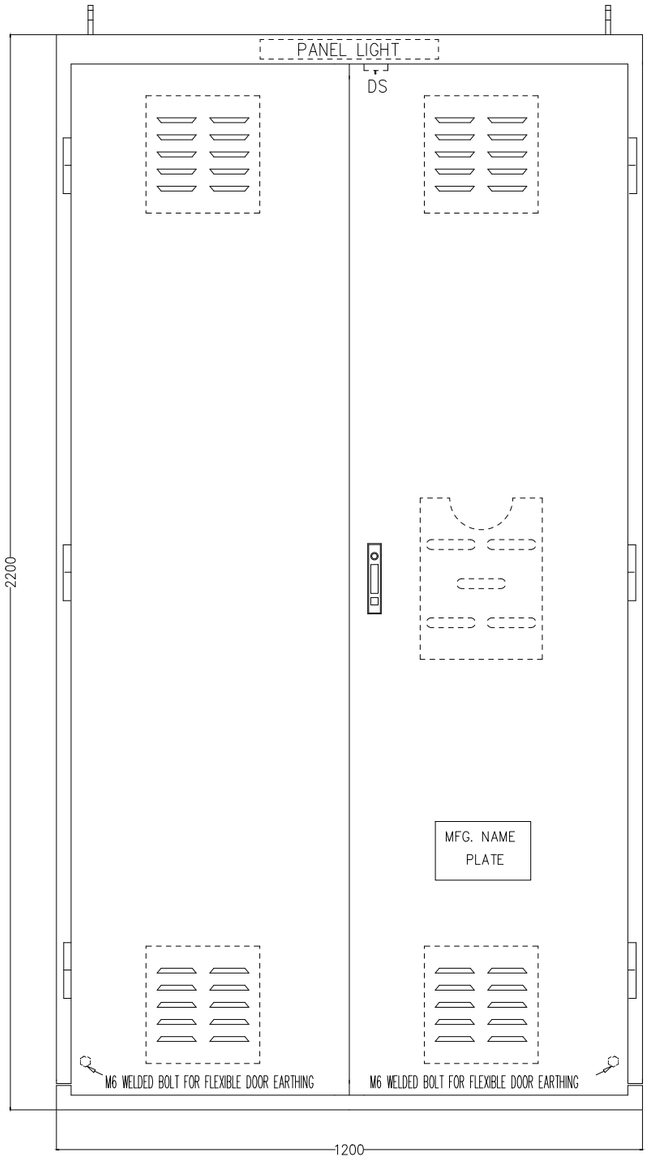

BACK SIDE VIEW

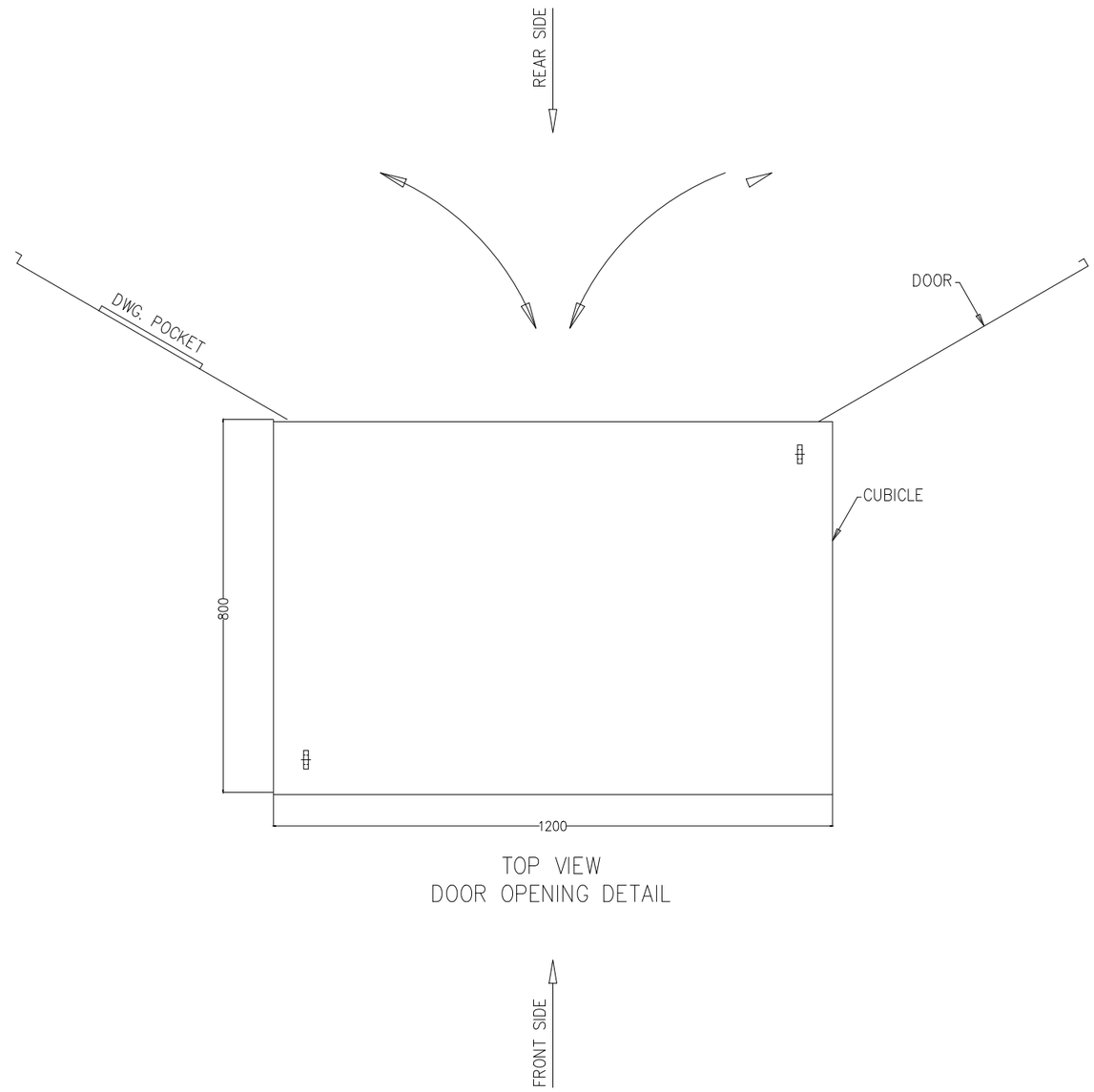

TOP VIEW
DOOR OPENING DETAIL

APPROVED	CHECKED	DRAWN	PROJECT:	TITLE:		DWG# EPE/ENU-18/B61568	SHT: 03OF 03
NAH	MSS	MUR	EDUCATIONAL ORDER NTDC PO# CE/MP&M /M(P)/AM-VI/EO/9417-29 DATED 14.11.2018 FOR THE PROCUREMENT OF 220KV & 500KV RELAY& CONTROL PANELS	LAYOUT DIAGRAM 500kV CONTROL PANEL TYPE =B06+WC1	EPESOL Pvt. Ltd. 71-B Garden Block, New Garden Town, Lahore, Pakistan	DATE: 07.03.2019 AS BUILT	REV: 0

LIST OF APPARATUS
500kV CONTROL PANEL
TYPE WC1 (LINE + TRAFO)

APPROVED	CHECKED	DRAWN	PROJECT:	TITLE:		DWG# EPE/ENU-18/B61569	SHT: 01 OF 06
NAH	MSS	MUR	EDUCATIONAL ORDER NTDC PO# CE/MP&M /M(P)/AM-VI/EO/9417-29 DATED 14.11.2018 FOR THE PROCUREMENT OF 220KV & 500KV RELAY& CONTROL PANELS	COVER SHEET 500kV CONTROL PANEL TYPE =B06+WC1	EPESOL Pvt. Ltd. 71-B Garden Block, New Garden Town, Lahore, Pakistan	DATE: 07.03.2019	AS BUILT REV: 0

SR.	ITEM DESIGNATION	DESCRIPTION	QTY	TYPE	MAKE	COUNTRY OF ORIGIN	ORDERING INFORMATION	SHEET NO
1	B6S01,B6S02,B6S03,	CONTROL DISCREPANCY SWITCH WITH LAMP ACCESSORIES (CB), SQUARE TYPE, 220 VDC	4	YS-IC-4456	YONGSUNG	SOUTH KOREA	YS-IC-4456-S4(49)-PM-K-G-D22-G	
	B6S4R							
2	B6S11, B6S12, B6S31,	CONTROL DISCREPANCY SWITCH WITH LAMP ACCESSORIES (ISO/ES), ROUND TYPE, 220 VDC	10	YS-IC-4456	YONGSUNG	SOUTH KOREA	YS-IC-4456-R4(49)-PM-K-G-D22-G	
	B6S32, B6S21, B6S22,							
	B6S10, B6ES10, B6S20, B6S41							
3	H101, H102, H103, H104,	ANNUNCIATION MODULE, 12-WINDOWS, AM101, 220 VDC	8	AM101	E-LABS	PAKISTAN	-	
	H105, H106, H107, H108							
4	H109, H110	ANNUNCIATION MODULE, 12-WINDOWS, AM101, 240 VAC	2	AM101	E-LABS	PAKISTAN	-	
5	P1+T1,P3+T3,	METER(LINE+TRAFO-HV): 240 DEGREE TRANSDUCER OPERATED ANALOGUE AMPERE METER, INPUT 0...20/30 mA,	4	A96MMA	FRER	ITALY	-	
	P8+T8, P10+T10	ACCURACY CLASS 1, SCALE_1: 0...750/1125A, SCALE_2: 0...1500/2250A, SCALE_3:						
		0...3000/4500A.,						
		CURRENT TRANSDUCER: NOMINAL INPUT CURRENT 1/1.5A, OUTPUT 0...20/30mA,	4	MCOEAQ	FRER	ITALY	-	
		AUXILIARY VOLTAGE 220VDC, ACCURACY CLASS 1, CT RATIO 750:1500:3000 /1A.						
6	P12+T12, P14+T14	METER(TRAFO-LV): 240 DEGREE TRANSDUCER OPERATED ANALOGUE AMPERE METER, INPUT 0...20/30 mA,	2	A96MMA	FRER	ITALY	-	
		ACCURACY CLASS 1, SCALE_1: 0...600/900A, SCALE_2: 0...1200/1800A, SCALE_3: 0...2400/3600A.						
		CURRENT TRANSDUCER: NOMINAL INPUT CURRENT 5/7.5A, OUTPUT 0...20/30mA,	2	MCOEAQ	FRER	ITALY	-	
		AUXILIARY VOLTAGE 220VDC, ACCURACY CLASS 1, CT RATIO 600:1200:2400/5A.						
7	P2+T2, P9+T9	METER(LINE+TRAFO-HV): TRANSDUCER OPERATED DIGITAL AMPERE METER,INPUT 0...20/30 mA, ACCURACY CLASS 1,	2	D96MMA	FRER	ITALY	-	
		AUX. VOLTAGE 220VDC, SCALE_1: 0...750/1125A, SCALE_2: 0...1500/2250A, SCALE_3:						
		0...3000/4500A.,						
		CURRENT TRANSDUCER: NOMINAL INPUT CURRENT 1/1.5A, OUTPUT 0...20/30mA,	2	MCOEAQ	FRER	ITALY	-	
		AUXILIARY VOLTAGE 220VDC, ACCURACY CLASS 1, CT RATIO 750:1500:3000 /1A.						
8	P13+T13	METER(TRAFO-LV): TRANSDUCER OPERATED DIGITAL AMPERE METER,INPUT 0...20/30 mA, ACCURACY CLASS 1,	1	D96MMA	FRER	ITALY	-	
		SCALE_1: 0...600/900A, SCALE_2: 0...1200/1800A, SCALE_3: 0...2400/3600A, AUX. VOLTAGE 220 VDC.						
		CURRENT TRANSDUCER: NOMINAL INPUT CURRENT 5/7.5A, OUTPUT 0...20/30mA,	1	MCOEAQ	FRER	ITALY	-	
		AUXILIARY VOLTAGE 220VDC, ACCURACY CLASS 1, CT RATIO 600:1200:2400/5A						
9	P4+T4	METER(LINE): 240 DEGREE TRANSDUCER OPERATED ANALOGUE VOLT METER, INPUT 0...20/30mA,	1	A96MMA	FRER	ITALY	-	
		ACCURACY CLASS 1, SCALE 0...500/750 kV (MARKED RED AT 500 kV).						
		VOLTAGE TRANSDUCER: NOMINAL INPUT VOLTAGE, 0...110/165 VAC (L-L), OUTPUT 0...20/30 mA,	1	MCOEVQ	FRER	ITALY	-	
		AUXILIARY VOLTAGE 220 VDC, ACCURACY CLASS 1, PT RATIO:500/0.11 kV (L-L).						
10	P18+T18	METER(TRAFO-LV): 240 DEGREE TRANSDUCER OPERATED ANALOGUE VOLT METER, INPUT 0...20/30mA,	1	A96MMA	FRER	ITALY	-	
		ACCURACY CLASS 1, SCALE 0...220/330 kV (MARKED RED AT 220 kV).						
		VOLTAGE TRANSDUCER: NOMINAL INPUT VOLTAGE, 0...63.5/95.25 VAC (L-N), OUTPUT 0...20/30 mA,	1	MCOEVQ	FRER	ITALY	-	
		AUXILIARY VOLTAGE 220 VDC, ACCURACY CLASS 1, PT RATIO: 127/0.0635 kV (L-N).						

APPROVED	CHECKED	DRAWN
NAH	MSS	MUR

PROJECT: EDUCATIONAL ORDER NTDC PO# CE/MP&M /M(P)/AM-VI/EO/9417-29 DATED 14.11.2018 FOR THE PROCUREMENT OF 220KV & 500KV RELAY& CONTROL PANELS

TITLE: LIST OF APPARATUS

500kV CONTROL PANEL TYPE =B06+WC1

EPESOL Pvt. Ltd.
71-B Garden Block, New Garden Town, Lahore, Pakistan

DWG# EPE/ENU-18/B61569 | SHT: 02 OF 06
DATE: 07.03.2019 | AS BUILT | REV: 0

SR.	ITEM DESIGNATION	DESCRIPTION	QTY	TYPE	MAKE	COUNTRY OF ORIGIN	ORDERING INFORMATION	SHEET NO
11	P11+T11	METER(TRAFO-HV): 240 DEGREE TRANSDUCER OPERATED ANALOGUE VOLT METER, INPUT 0...20/30mA,	1	A96MMA	FRER	ITALY	–	
		ACCURACY CLASS 1, SCALE 0...500/750 kV (MARKED RED AT 500 kV).						
		VOLTAGE TRANSDUCER: NOMINAL INPUT VOLTAGE, 0...63.5/95.25 VAC (L-N), OUTPUT 0...20/30 mA,	1	MCOEVQ	FRER	ITALY	–	
		AUXILIARY VOLTAGE 220 VDC, ACCURACY CLASS 1, PT RATIO: 288.7/0.0635 kV (L-N).						
12	P6+T6	METER:(LINE) 240 DEGREE TRANSDUCER OPERATED ANALOGUE MVAR METER, INPUT -12.5/10...0...+10/12.5 mA,	1	A96MMA	FRER	ITALY	–	
		ACCURACY CLASS 1, SCALE_1: 1000-0-1000 MVAR (650 MVAR at 10mA), SCALE_2: 2000-0-2000 MVAR (1299						
		MVAR at 10mA), SCALE_3: 4000-0-4000 MVAR (2598 MVAR at 10mA)						
		MVAR TRANSDUCER: 3-PHASE, 4-WIRE BALANCED LOAD, NOMINAL INPUT VOLTAGE 110/137.5 VAC(L-L),	1	MCORT	FRER	ITALY	–	
		NOMINAL INPUT CURRENT 1/1.25A, AUXILIARY VOLTAGE 220 VDC, ACCURACY CLASS 1, OUTPUT1:						
		-12.5/10...0...+10/12.5 mA, PT RATIO: 500/0.11 kV (L-L), CT RATIO 750:1500:3000 /1A.						
13	P16+T16	METER(TRAFO-LV): 240 DEGREE TRANSDUCER OPERATED ANALOGUE MVAR METER, INPUT -12.5/10...0...+10/12.5 mA,	1	A96MMA	FRER	ITALY	–	
		ACCURACY CLASS 1, SCALE_1: 300-0-300 MVAR (229 MVAR at 10mA), SCALE_2:						
		600-0-600 MVAR (457 MVAR at 10mA), SCALE_3: 1200-0-1200 MVAR (915 MVAR at 10mA).						
		MVAR TRANSDUCER: 3-PHASE, 4-WIRE BALANCED LOAD, NOMINAL INPUT VOLTAGE 63.5/79.4 VAC(L-N),	1	MCORN	FRER	ITALY	–	
		NOMINAL INPUT CURRENT 5/6.25A, AUXILIARY VOLTAGE 220 VDC, ACCURACY CLASS 1, OUTPUT1:						
		-12.5/10...0...+10/12.5 mA, PT RATIO: 127/0.0635 kV (L-N), CT RATIO 2400:1200:600/5A.						
14	P5+T5	METER:(LINE) 240 DEGREE TRANSDUCER OPERATED ANALOGUE MW METER, INPUT -12.5/10...0...+10/12.5 mA, ACCURACY	1	A96MMA	FRER	ITALY	–	
		CLASS 1, SCALE_1: 1000-0-1000 MW (650 MW at 10mA), SCALE_2: 2000-0-2000 MW (1299 MW at 10mA),						
		SCALE_3: 4000-0-4000 MW (2598 MW at 10mA)						
		MW TRANSDUCER: 3-PHASE, 4-WIRE BALANCED LOAD, NOMINAL INPUT VOLTAGE 110/137.5 VAC(L-L),	1	MCOWT	FRER	ITALY	–	
		NOMINAL INPUT CURRENT 1/1.25A, AUXILIARY VOLTAGE 220 VDC, ACCURACY CLASS 1, OUTPUT1:						
		-12.5/10...0...+10/12.5 mA, PT RATIO: 500/0.11 kV (L-L), CT RATIO 750:1500:3000 /1A.						
15	P15+T15	METER(TRAFO-LV): 240 DEGREE TRANSDUCER OPERATED ANALOGUE MW METER, INPUT -12.5/10...0...+10/12.5 mA,	1	A96MMA	FRER	ITALY	–	
		ACCURACY CLASS 1, SCALE_1: 300-0-300 MW (229 MW at 10mA), SCALE_2:						
		600-0-600 MW (457 MW at 10mA), SCALE_3: 1200-0-1200 MW (915 MW at 10mA).						
		MW TRANSDUCER: 3-PHASE, 4-WIRE BALANCED LOAD, NOMINAL INPUT VOLTAGE 63.5/79.4 VAC(L-N),	1	MCOWN	FRER	ITALY	–	
		NOMINAL INPUT CURRENT 5/6.25A, AUXILIARY VOLTAGE 220 VDC, ACCURACY CLASS 1, OUTPUT1:						
		-12.5/10...0...+10/12.5 mA, PT RATIO: 127/0.0635 kV (L-N), CT RATIO 2400:1200:600/5A.						
16	P7, P17	METER(LINE+TRAFO-LV): THREE PHASE DIGITAL POWER METER, ACCURACY CLASS 0.5s, INPUT NOMINAL CURRENT, 1/5A,	2	ENERIUM-150	ENERDIS	FRANCE	–	
		INPUT NOMINAL VOLTAGE 110 VAC (L-L), AUXILIARY VOLTAGE 110-375 VDC.						
17	VSS-1, VSS-2,	7-POSITION VOLTAGE SELECTOR SWITCH	3	PO	GIOVENZANA	ITALY	PO-160023R001	
	VSS-3							

APPROVED	CHECKED	DRAWN
NAH	MSS	MUR

PROJECT: EDUCATIONAL ORDER NTDC PO# CE/MP&M /M(P)/AM-VI/EO/9417-29 DATED 14.11.2018 FOR THE PROCUREMENT OF 220KV & 500KV RELAY& CONTROL PANELS

TITLE: LIST OF APPARATUS

500kV CONTROL PANEL TYPE =B06+WC1

EPESOL Pvt. Ltd.
71-B Garden Block, New Garden Town, Lahore, Pakistan

DWG# EPE/ENU-18/B61569 | SHT: 03 OF 06

DATE: 07.03.2019 | AS BUILT | REV: 0

SR.	ITEM DESIGNATION	DESCRIPTION	QTY	TYPE	MAKE	COUNTRY OF ORIGIN	ORDERING INFORMATION	SHEET NO
18	LT, ACK, RST	PUSH BUTTON FOR ANNUNCIATORS LAMP TEST, ACKNOWLEDGE AND RESET,	3	YSAP1	YONGSUNG	SOUTH KOREA	YS-AP1-2-40-R-D-W	
		FOUR NO CONTACTS EACH					YS-AP1-2-40-G-D-W	
							YS-AP1-2-40-Y-D-W	
19	S100	2-POSITION KEY OPERATED SWITCH FOR SCADA-LOCAL CONTROL	1	YS-AK	YONGSUNG	SOUTH KOREA	YS-AK-2-2-44-D	
20	K1 TO K8, K18 TO K35	AUXILIARY RELAY, 220VDC, WITH 4 C/O CONTACTS	29	PRC	GE	HUNGARY/POLAND	PRC4M40DCML	
	KDC1, KDC2, KDC3							
21	K9 TO K17	AUXILIARY RELAY, 48VDC, WITH 4 C/O CONTACTS	9	PRC	GE	HUNGARY/POLAND	PRC4M40DCGL	
22	K56, K57, K58, KAC	AUXILIARY RELAY, 240 VAC, WITH 4 C/O CONTACTS	4	PRC	GE	HUNGARY/POLAND	PRC4M40ANL	
23	74DC-1, 74DC-2	DC SUPPLY SUPERVISION RELAY, 220 VDC, WITH 2 C/O CONTACTS	2	VDF10	ARTECHE	SPAIN	VDF-10-OP2-220VDC	
24	K121	FLASHER RELAY, 220 VDC	1	FR101	E-LABS	PAKISTAN		
25	F100, F103, F104	AC MCB, DOUBLE POLE, 6A, 240 VAC, WITH 1 C/O CONTACT	3	G60	GE	HUNGARY/POLAND	G62C06+CAH(1)	
26	F102	ELCB, 2-POLE, RATINGS: 16A, 30mA, 230VAC, WITH 1 C/O CONTACT	1	DM100	GE	HUNGARY/POLAND	DM100C16/030+CAH(1)	
27	F110, F211, F212, F213	DC MCB, DOUBLE POLE, 10A, 220 VDC, WITH 1 C/O CONTACT	4	EP100	GE	HUNGARY/POLAND	EP102UCC10+CAH(1)	
28	F1	AC MCB, FOUR POLE, 2A, 240 VAC, WITH 1 C/O CONTACT	1	G60	GE	HUNGARY/POLAND	G64C02+CAH(1)	
29	F2, F3	AC MCB, TWO POLE, 2A, 240 VAC, WITH 1 C/O CONTACT	2	G60	GE	HUNGARY/POLAND	G62C02+CAH(1)	
30	C1, C2, C3, C4	CB OPERATION COUNTER, 220 VDC	4	CTR	E-LABS	PAKISTAN		
31	TS-1, TS-2	TEST SWITCH FOR METERING CIRCUIT, 14 FINGER	2	saTECH	ARTECHE	SPAIN	TSB-14-2222111111AAAB-V	
32	TS-3	TEST SWITCH FOR METERING CIRCUIT, 14 FINGER	1	saTECH	ARTECHE	SPAIN	TSB-14-111111ABABABAB-V	
33	SH	SPACE HEATER	1	–	E-LABS	PAKISTAN	–	
34	TH+HS	THERMOSTAT & HUMIDISTAT	1	ELH-220	E-LABS	PAKISTAN	–	
35	IL	CUBICAL LIGHTING, 5W, 240 VAC	1	YS-T8	YONGSUNG	SOUTH KOREA	YS-T8-30-5W	
36	DS	DOOR SWITCH	1	YSP+YSMS-C	YONGSUNG	SOUTH KOREA	YSP3315GWB+YSMS-C	
37	TPS	THREE PIN SOCKET, 16A, 240 VAC	1		LEAR	CHINA	–	

APPROVED	CHECKED	DRAWN
NAH	MSS	MUR

PROJECT: EDUCATIONAL ORDER NTDC PO# CE/MP&M /M(P)/AM-VI/EO/9417-29 DATED 14.11.2018 FOR THE PROCUREMENT OF 220KV & 500KV RELAY& CONTROL PANELS

TITLE: LIST OF APPARATUS

500kV CONTROL PANEL TYPE =B06+WC1

EPESOL Pvt. Ltd.
71-B Garden Block, New Garden Town, Lahore, Pakistan

DWG# EPE/ENU-18/B61569 | SHT: 04 OF 06
DATE: 07.03.2019 | AS BUILT | REV: 0

SR.	ITEM DESIGNATION	DESCRIPTION	QTY	TYPE	MAKE	COUNTRY OF ORIGIN	ORDERING INFORMATION	SHEET NO
38	TLS	TELPHONE SOCKET	1		LOCAL	PAKISTAN	–	
39	SY1, SY2, SY3,	KEY OPERATED SWITCH FOR SYNCH.	3	YS–AK	YONGSUNG	SOUTH KOREA	YS–AK–2–2–44–D	
40	H11, H12, H21, H41	INDICATION LAMP (TCS), LCC LOCAL MODE 220 VDC, GREEN	14	YS–PL	YONGSUNG	SOUTH KOREA	YS–PL–2–DL–22–G–W	
	H22, H31, H32, H42							
	H13, H23, H33, H10							
	H20, H43							
41	H14, H24, H34, H44	INDICATION LAMP (RED), CB MAINTENANCE 220 VDC	4	YS–PL	YONGSUNG	SOUTH KOREA	YS–PL–2–DL–22–R–W	
42	H1, H2	INDICATION LAMP (GREEN), 240 VAC	2	YS–PL	YONGSUNG	SOUTH KOREA	YS–PL–2–AL–22–G–W	
43	HTR	HOOTER FOR ALARM FUNCTION, 220 VOLT DC	1	AH–101	E–LABS	PAKISTAN	–	
44	B	BELL FOR DC FAIL FUNCTION, 240 VOLT AC	1	YSMB	YONGSUNG	SOUTH KOREA	YSMB–722A	
45	X600	DISCONNECTING TERMINAL BLOCK (SCREW TYPE) FOR CT CIRCUIT WITH SHORTENING ARRANGMENT	12	SCB–6	CABUR	ITALY	–	
46	X601	DISCONNECTING TERMINAL BLOCK (SCREW TYPE) FOR CT CIRCUIT WITH SHORTENING ARRANGMENT	12	SCB–6	CABUR	ITALY	–	
47	X602	DISCONNECTING TERMINAL BLOCK (SCREW TYPE) FOR CT CIRCUIT WITH SHORTENING ARRANGMENT	12	SCB–6	CABUR	ITALY	–	
48	X700	DISCONNECTING TERMINAL BLOCK (SCREW TYPE) FOR VT CIRCUIT	5	SCB–6	CABUR	ITALY	–	
49	X701	DISCONNECTING TERMINAL BLOCK (SCREW TYPE) FOR VT CIRCUIT	3	SCB–6	CABUR	ITALY	–	
50	X702	DISCONNECTING TERMINAL BLOCK (SCREW TYPE) FOR VT CIRCUIT	3	SCB–6	CABUR	ITALY	–	
51	X704	DISCONNECTING TERMINAL BLOCK (SCREW TYPE) FOR VT CIRCUIT	13	SCB–6	CABUR	ITALY	–	
52	X100	TERMINAL BLOCKS FOR AC SUPPLY DISTRIBUTION	5	CBD–4	CABUR	ITALY	–	
53	X200	TERMINAL BLOCKS FOR TELEPHONE CIRCUIT	4	CBD–4	CABUR	ITALY	–	
54	X110	TERMINAL BLOCKS FOR DC–1 DISTRIBUTION	7	CBD–4	CABUR	ITALY	–	
55	X120	TERMINAL BLOCKS FOR DC–2 DISTRIBUTION	5	CBD–4	CABUR	ITALY	–	
56	X1	TERMINAL BLOCKS FOR CB & DISCONNECTOR CONTROL CIRCUIT	31	CBD–4	CABUR	ITALY	–	
57	X3	TERMINAL BLOCKS FOR CB & DISCONNECTOR CONTROL CIRCUIT	31	CBD–4	CABUR	ITALY	–	

APPROVED	CHECKED	DRAWN
NAH	MSS	MUR

PROJECT: EDUCATIONAL ORDER NTDC PO# CE/MP&M /M(P)/AM–VI/EO/9417–29 DATED 14.11.2018 FOR THE PROCUREMENT OF 220KV & 500KV RELAY& CONTROL PANELS

TITLE: LIST OF APPARATUS

500kV CONTROL PANEL TYPE =B06+WC1

EPESOL Pvt. Ltd.
71-B Garden Block, New Garden Town, Lahore, Pakistan

DWG# EPE/ENU–18/B61569 | SHT: 05 OF 06
DATE: 07.03.2019 | AS BUILT | REV: 0

SR.	ITEM DESIGNATION	DESCRIPTION	QTY	TYPE	MAKE	COUNTRY OF ORIGIN	ORDERING INFORMATION	SHEET NO
64	X71	TERMINAL BLOCKS FOR CB & DISCONNECTOR CONTROL SCADA	34	CBD-4	CABUR	ITALY	–	
65	X72	TERMINAL BLOCKS FOR CB & DISCONNECTOR CONTROL SCADA	34	CBD-4	CABUR	ITALY	–	
66	X8	TERMINAL BLOCKS FOR CB SYNCH. SELECTION CIRCUIT	5	CBD-4	CABUR	ITALY	–	
67	X5	TERMINAL BLOCKS FOR CB & DISCONNECTOR POSITION INDICATION CIRCUIT	60	CBD-4	CABUR	ITALY	–	
68	X4	TERMINAL BLOCKS FOR CONTROL OPERATION	63	CBD-4	CABUR	ITALY	–	
69	X9	TERMINAL BLOCKS FOR DC ANNUNCIATORS	40	CBD-4	CABUR	ITALY	–	
70	X10	TERMINAL BLOCKS FOR DC ANNUNCIATORS	100	CBD-4	CABUR	ITALY	–	
71	X11	TERMINAL BLOCKS FOR AC ANNUNCIATORS	15	CBD-4	CABUR	ITALY	–	
72	X12	TERMINAL BLOCKS FOR AC ANNUNCIATORS	26	CBD-4	CABUR	ITALY	–	
73	X73	TERMINAL BLOCKS FOR SCADA	10	CBD-4	CABUR	ITALY	–	
74	X7	TERMINAL BLOCKS FOR SYNCH. CIRCUIT	7	CBD-4	CABUR	ITALY	–	
75	XD	TERMINAL BLOCKS WITH DIODE TYPE IN-D4007, RATED MAXIMUM VOLTAGE 350VDC, RATED BREAK DOWN VOLTAGE 430VDC	40	DAS.4/6	CABUR	ITALY	–	

APPROVED	CHECKED	DRAWN
NAH	MSS	MUR

PROJECT: EDUCATIONAL ORDER NTDC PO# CE/MP&M /M(P)/AM-VI/EO/9417-29 DATED 14.11.2018 FOR THE PROCUREMENT OF 220KV & 500KV RELAY& CONTROL PANELS

TITLE: LIST OF APPARATUS

500kV CONTROL PANEL TYPE =B06+WC1

EPESOL Pvt. Ltd.
71-B Garden Block, New Garden Town, Lahore, Pakistan

DWG# EPE/ENU-18/B61569 | SHT: 06 OF 06

DATE: 07.03.2019 | AS BUILT | REV: 0

SCHEMETIC DIAGRAMS
500kV CONTROL PANEL TYPE
=B06+WC1 (LINE + TRAFO)

APPROVED	CHECKED	DRAWN	PROJECT:			
NAH	MSS	MUR	EDUCATIONAL ORDER NTDC PO# CE/MP&M /M(P)/AM-VI/EO/9417-29 DATED 14.11.2018 FOR THE PROCUREMENT OF 220KV & 500KV RELAY& CONTROL PANELS	COVER SHEET 500kV CONTROL PANEL TYPE =B06+WC1	EPESOL Pvt. Ltd. 71-B Garden Block, New Garden Town, Lahore, Pakistan	DWG# EPE/ENU-18/B61570
						DATE: 07.03.2019 **AS BUILT**

SHT: 01 OF 38

REV: 0

DESCRIPTION	SHEET NO
COVER SHEET	01
LIST OF CONTENTS	02
LIST OF SYMBOLS	03
SINGLE LINE DIAGRAM	04
COMPARTMENT HEATING CIRCUIT	05
TELE PHONE SOCKET	06
220 VOLT DC SUPPLY–1 & 2 DISTRIBUTION	07
AC & DC MCB TRIP ANNUNCIATION	08
CB & DISCONNECTORS REMOTE CONTROL	09
CB & DISCONNECTORS REMOTE CONTROL	10
CB & DISCONNECTORS REMOTE CONTROL	11
CB & DISCONNECTORS REMOTE CONTROL	12
CB SELECTION FOR SYNCHRONIZING	13
500kV CB/DS DESCREPANCY INITIATION	14
500kV CB/DS DESCREPANCY INITIATION	15
500kV CB/DS DESCREPANCY INITIATION	16
SR CB/DS DESCREPANCY INITIATION	17
TRIP SUPPLY HEALTHY INDICATIONS	18
TRIP SUPPLY HEALTHY INDICATIONS	19
ANNUCIATOR UNIT – 1	20
ANNUCIATOR UNIT – 2	21
ANNUCIATOR UNIT – 3	22
ANNUCIATOR UNIT – 4	23
ANNUCIATOR UNIT – 5	24
ANNUCIATOR UNIT – 6	25
ANNUCIATOR UNIT – 7	26
ANNUCIATOR UNIT – 8	27

DESCRIPTION	SHEET NO
ANNUNCIATOR UNIT – 9	28
ANNUNCIATOR UNIT – 10	29
SCADA SIGNALS	30
AC SCHEMATIC DIAGRAM FOR LINE METERING	31
AC SCHEMATIC DIAGRAM FOR TRAFO HV METERING	32
AC SCHEMATIC DIAGRAM FOR TRAFO LV METERING	33
VOLTAGE SELECTION FOR 500kV CIRCUIT BREAKER	34
SYNC. RELAY INPUT	35
SYNC. RELAY SIGNALS	36
SYNC. RELAY SIGNALS	37
TEST BLOCK DETAILS	38

APPROVED	CHECKED	DRAWN
NAH	MSS	MUR

PROJECT: EDUCATIONAL ORDER NTDC PO# CE/MP&M /M(P)/AM–VI/EO/9417–29 DATED 14.11.2018 FOR THE PROCUREMENT OF 220KV & 500KV RELAY& CONTROL PANELS

LIST OF CONTENTS

500kV CONTROL PANEL TYPE =B06+WC1

EPESOL Pvt. Ltd.
71-B Garden Block, New Garden Town, Lahore, Pakistan

DWG# EPE/ENU–18/B61570 | SHT: 02 OF 38

DATE: 07.03.2019 | AS BUILT | REV: 0

LIST OF SYMBOLS

	HV DISCONNECTOR		EQUIPMENT WITHIN PANEL
	HV CIRCUIT BREAKER		INDEPENDENT PANEL
	CURRENT TRANSFORMER		INDEPENDENT PANEL
	132/11 KV POWER TRANSFORMER	21	DISTANCE RELAY
	RELAY PANEL TERMINAL BLOCK	50/51	OVER CURRENT EARTH FAULT RELAY
	CONTROL PANEL TERMINAL BLOCK	TS	TEST BLOCK
	EARTH CONNECTION	74DC-X	DC SUPLY SUPERVISION RELAY
	TEST BLOCK TERMINAL	X	TERMINAL BLOCK
	NORMALLY CLOSED CONTACT	A	AMPERE METER
	NORMALLY OPEN CONTACT	V	VOLT METER
	CHANGE OVER CONTACT	WM	MEGA WATT METER
	MINIATURE CIRCUIT BREAKER	MVAR	MEGA VAR METER
	INDICATING BULB/LED	KWH	ENERGY METER
	220V SOCKET		
	SPACE HEATER		
VSS	VOLTAGE SELECTOR SWITCH		
	COIL		
	DC HOOTER		
	DC SIREN		
	AC BELL		

APPROVED	CHECKED	DRAWN
NAH	MSS	MUR

PROJECT: EDUCATIONAL ORDER NTDC PO# CE/MP&M /M(P)/AM-VI/EO/9417-29 DATED 14.11.2018 FOR THE PROCUREMENT OF 220KV & 500KV RELAY& CONTROL PANELS

LIST OF SYMBOLS

500kV CONTROL PANEL TYPE =B06+WC1

EPESOL Pvt. Ltd.
71-B Garden Block, New Garden Town, Lahore, Pakistan

DWG# EPE/ENU-18/B61570 | SHT: 03 OF 38

DATE: 07.03.2019 | AS BUILT | REV: 0

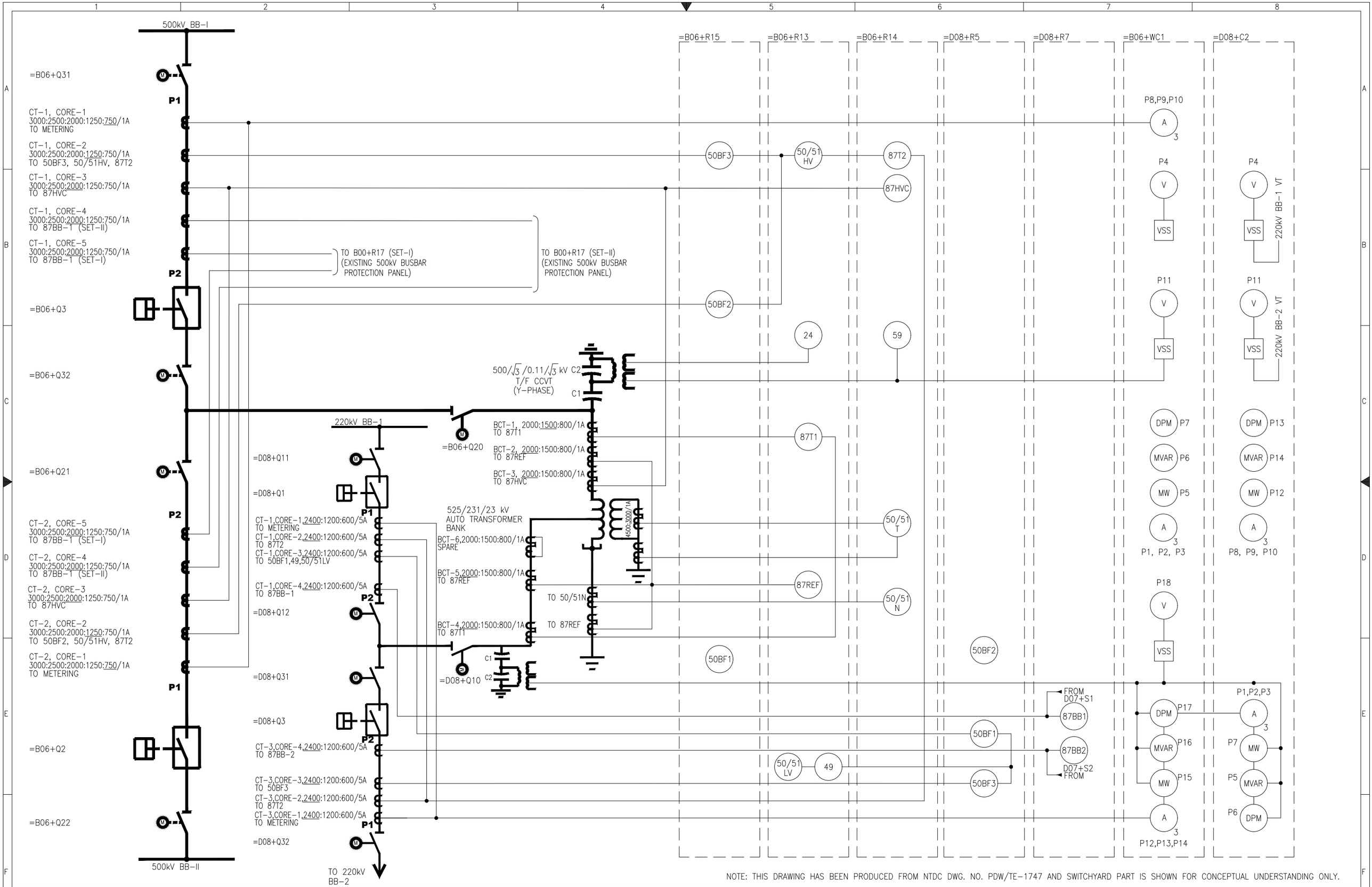

NOTE: THIS DRAWING HAS BEEN PRODUCED FROM NTDC DWG. NO. PDW/TE-1747 AND SWITCHYARD PART IS SHOWN FOR CONCEPTUAL UNDERSTANDING ONLY.

APPROVED	CHECKED	DRAWN	PROJECT:			
NAH	MSS	MUR	EDUCATIONAL ORDER NTDC PO# CE/MP&M /M(P)/AM-VI/EO/9417-29 DATED 14.11.2018 FOR THE PROCUREMENT OF 220KV & 500KV RELAY& CONTROL PANELS	SINGLE LINE DIAGRAM 500kV CONTROL PANEL TYPE =B06+WC1	EPESOL Pvt. Ltd. 71-B Garden Block, New Garden Town, Lahore, Pakistan	DWG# EPE/ENU-18/B61570
						DATE: 07.03.2019 AS BUILT

SHT: 04 OF 38

REV: 0

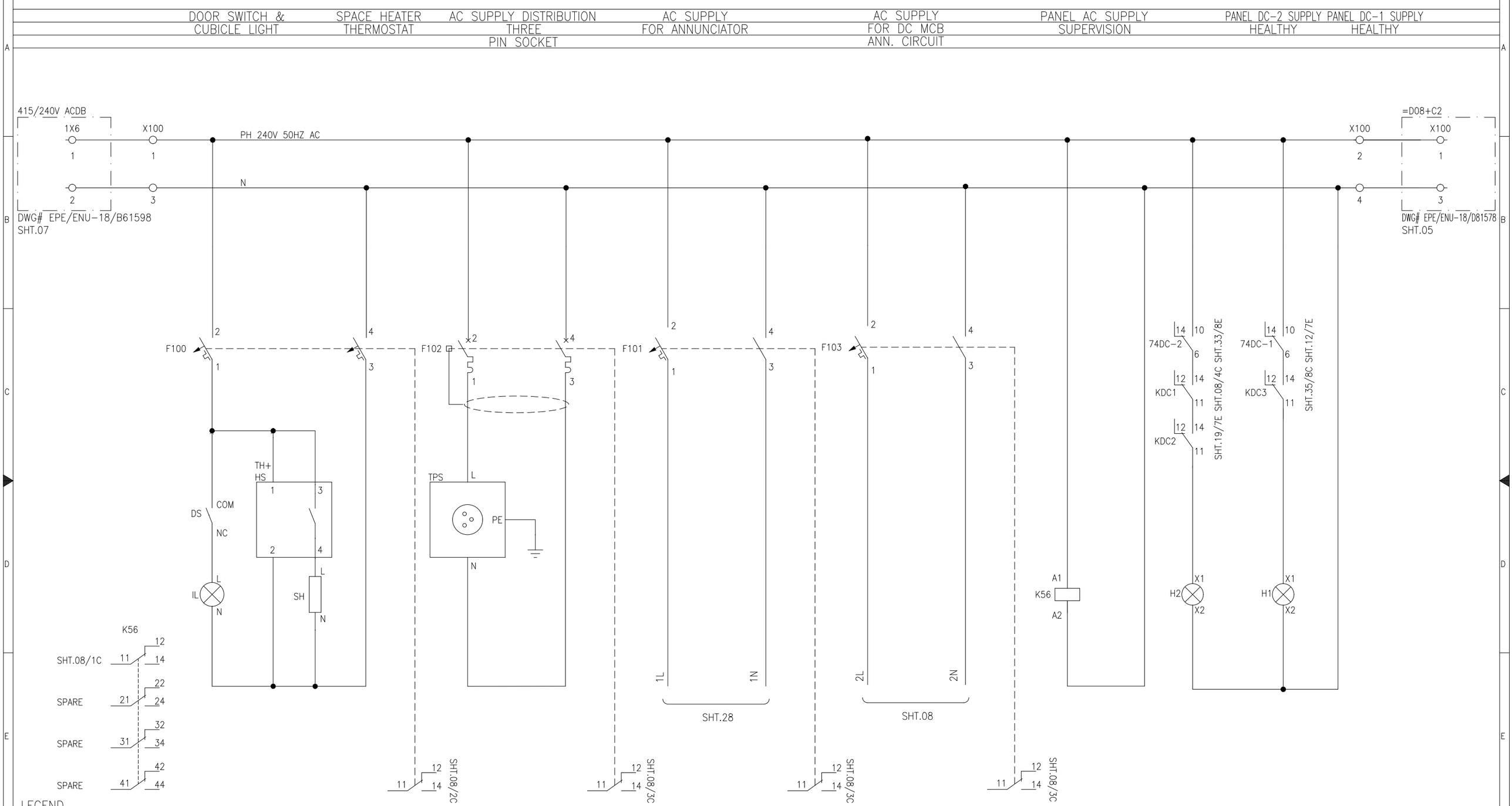

LEGEND

DES:	DESCRIPTION	TYPE	MAKE	DES:	DESCRIPTION	TYPE	MAKE	DES:	DESCRIPTION	TYPE	MAKE
TPS	THREE PIN SOCKET	--	LEAR	IL	CUBICLE LIGHT, 5W, 240VAC	YST8	YONGSUNG	F102	ELCB	DM100	GE
SH	SPACE HEATER	ELH220	E-LABS	DS	DOOR SWITCH	YSP+YSMS-C	YONGSUNG	K56	AUX. RELAY 240VAC, 4 C/O	PRC	GE
TH+HS	THERMOSTAT	ELH220	E-LABS	F100,F101,F103	AC MCB 2 POLE, 6A, 240VAC	G60	GE	H1, H2	INDICATION LAMP, 240VAC, RED COLOR	YS-PL	YONGSUNG

APPROVED	CHECKED	DRAWN
NAH	MSS	MUR

PROJECT: EDUCATIONAL ORDER NTDC PO# CE/MP&M/M(P)/AM-VI/EO/9417-29 DATED 14.11.2018 FOR THE PROCUREMENT OF 220KV & 500KV RELAY& CONTROL PANELS

AC SUPPLY DISTRIBUTION

500kV CONTROL PANEL TYPE =B06+WC1

EPESOL Pvt. Ltd.
71-B Garden Block, New Garden Town, Lahore, Pakistan

DWG# EPE/ENU-18/B61570 | SHT: 05 OF 38

DATE: 07.03.2019 | AS BUILT | REV: 0

TELEPHONE SOCKET

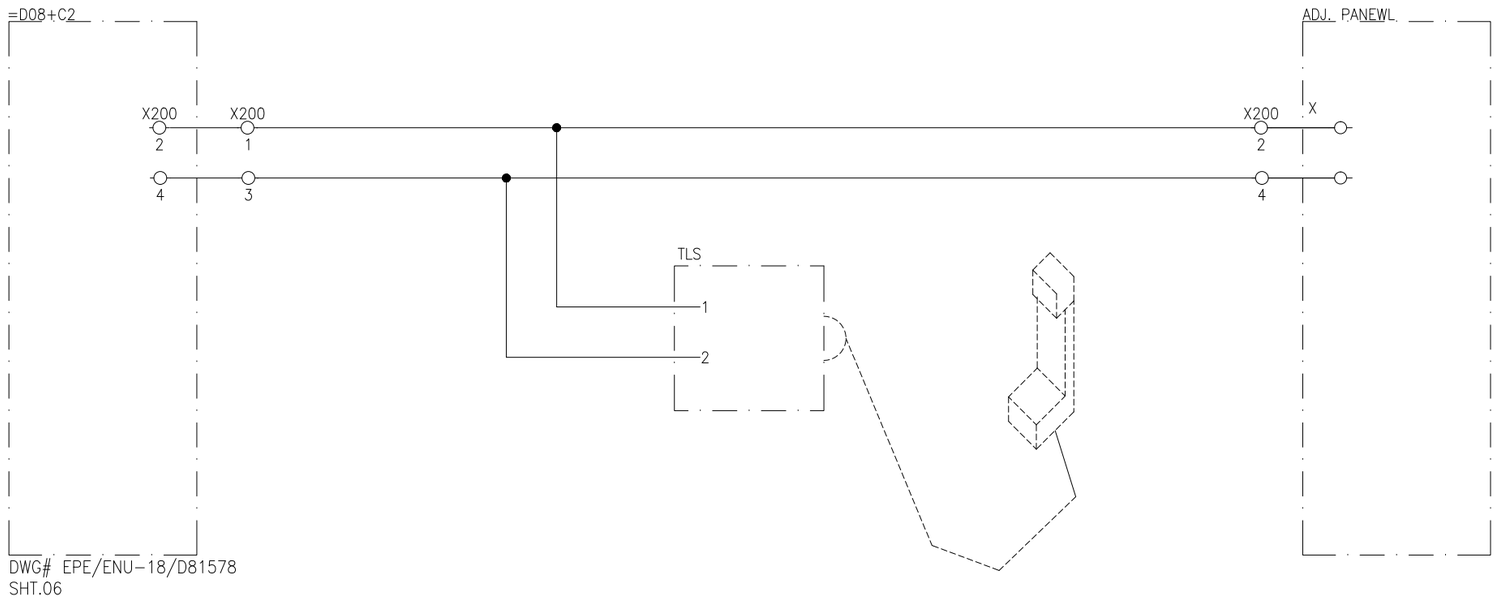

DWG# EPE/ENU-18/D81578
SHT.06

LEGEND

DES:	DESCRIPTION	TYPE	MAKE	DES:	DESCRIPTION	TYPE	MAKE	DES:	DESCRIPTION	TYPE	MAKE
TLS	TELEPHONE SOCKET	LOCAL	LOCAL								

APPROVED	CHECKED	DRAWN
NAH	MSS	MUR

PROJECT: EDUCATIONAL ORDER NTDC PO# CE/MP&M /M(P)/AM-VI/EO/9417-29 DATED 14.11.2018 FOR THE PROCUREMENT OF 220KV & 500KV RELAY& CONTROL PANELS

TELEPHONE SOCKET

500kV CONTROL PANEL TYPE =B06+WC1

EPESOL Pvt. Ltd.
71-B Garden Block, New Garden Town, Lahore, Pakistan

DWG# EPE/ENU-18/B61570 | SHT: 06 OF 38
DATE: 07.03.2019 | AS BUILT | REV: 0

500kV CB & ISO CONTROL SUPPLY

SYNCH SELECTION SUPPLY

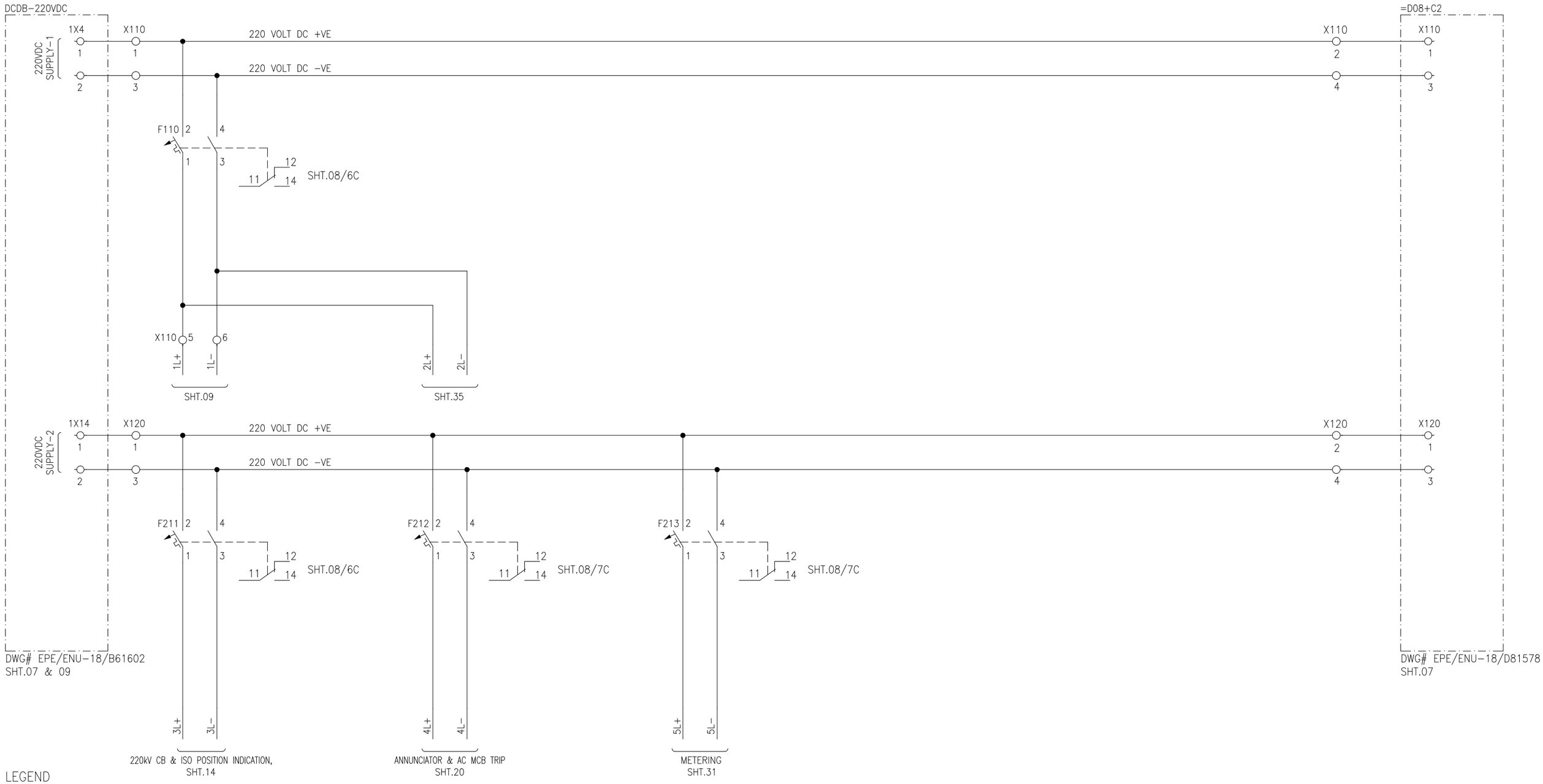

LEGEND

DES:	DESCRIPTION	TYPE	MAKE	DES:	DESCRIPTION	TYPE	MAKE	DES:	DESCRIPTION	TYPE	MAKE
F110,F210, F212,F213	DC MCB 2-POLE 10A, 220VDC, 1 C/O	EP100 UC	GE								

APPROVED	CHECKED	DRAWN	PROJECT:	220VDC SUPPLY DISTRIBUTION	EPESOL Pvt. Ltd.	DWG# EPE/ENU-18/B61570	SHT: 07 OF 38
NAH	MSS	MUR	EDUCATIONAL ORDER NTDC PO# CE/MP&M /M(P)/AM-VI/EO/9417-29 DATED 14.11.2018 FOR THE PROCUREMENT OF 220KV & 500KV RELAY& CONTROL PANELS	500kV CONTROL PANEL TYPE =B06+WC1	71-B Garden Block, New Garden Town, Lahore, Pakistan	DATE: 07.03.2019 AS BUILT	REV: 0

AC MCB TRIP/SUPPLY FAIL ANN. CIRCUIT

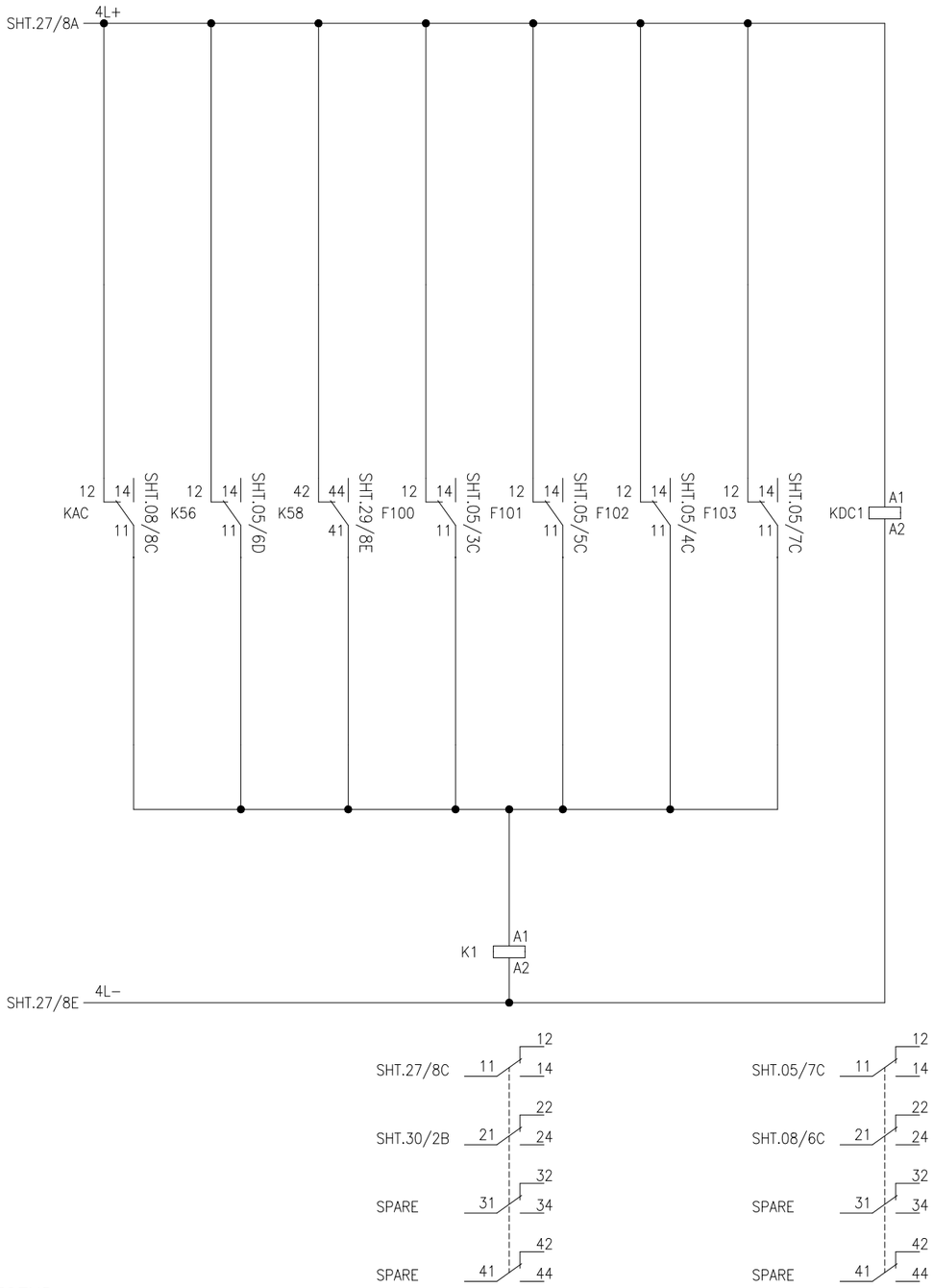

DC MCB TRIP/SUPPLY FAIL ANN. CIRCUIT

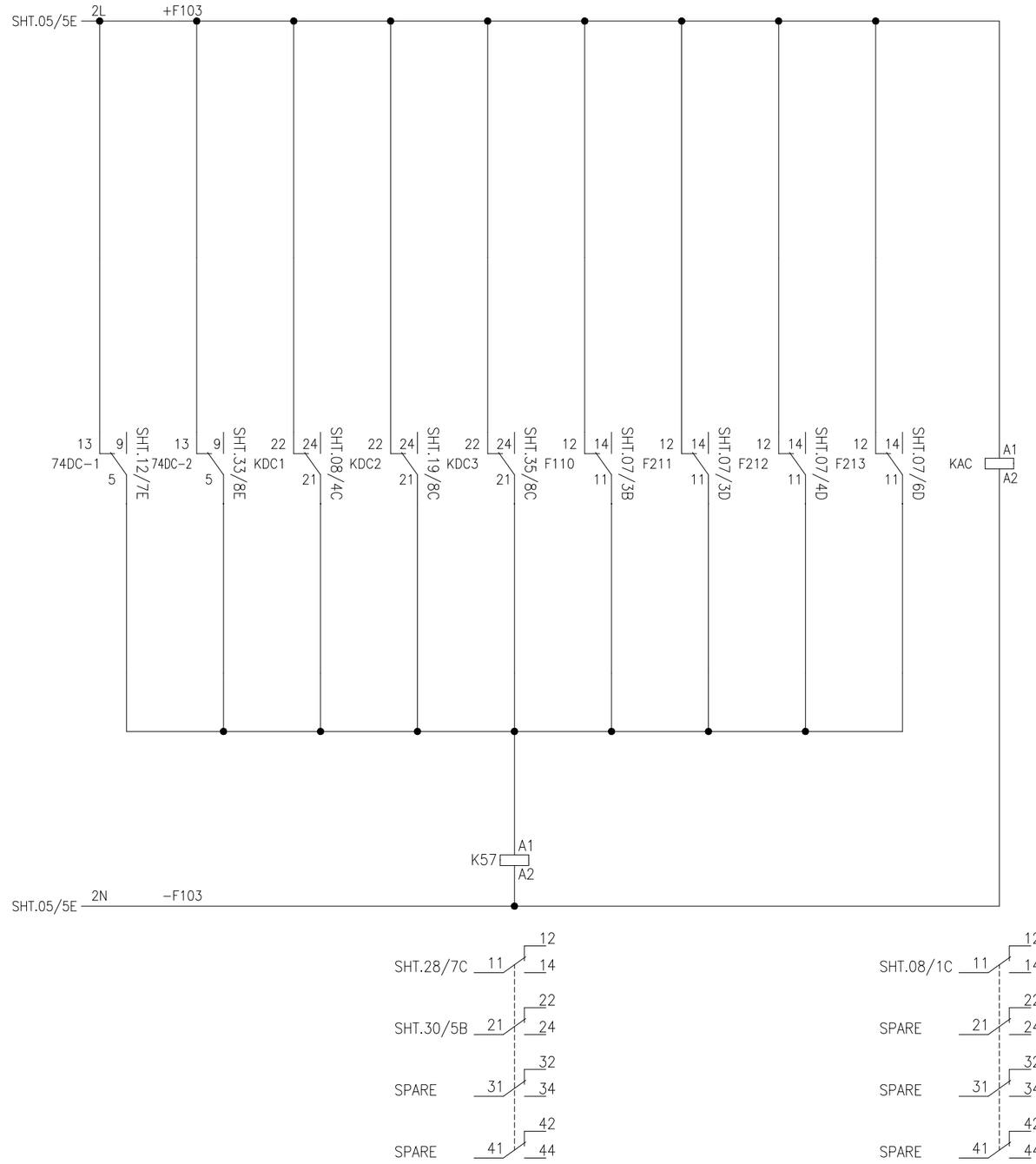

LEGEND

DES:	DESCRIPTION	TYPE	MAKE	DES:	DESCRIPTION	TYPE	MAKE	DES:	DESCRIPTION	TYPE	MAKE
F110,F211,F212,F213	DC MCB 2−POLE 10A, 220VDC, 1 C/O	EP100	GE	K1, KDC1	AUX. RELAY 220VDC, 4 C/O	PRC	GE				
F100,F101,F103	AC MCB 2 POLE, 6A, 240VAC	G60	GE	K57, KAC	AUX. RELAY 220VAC, 4 C/O	PRC	GE				

APPROVED	CHECKED	DRAWN
NAH	MSS	MUR

PROJECT: EDUCATIONAL ORDER NTDC PO# CE/MP&M /M(P)/AM−VI/EO/9417−29 DATED 14.11.2018 FOR THE PROCUREMENT OF 220KV & 500KV RELAY& CONTROL PANELS

AC & DC MCB TRIP ANNUNCIATION

500kV CONTROL PANEL TYPE =B06+WC1

EPESOL Pvt. Ltd.
71-B Garden Block, New Garden Town, Lahore, Pakistan

DWG# EPE/ENU−18/B61570 | SHT: 08 OF 38

DATE: 07.03.2019 | AS BUILT | REV: 0

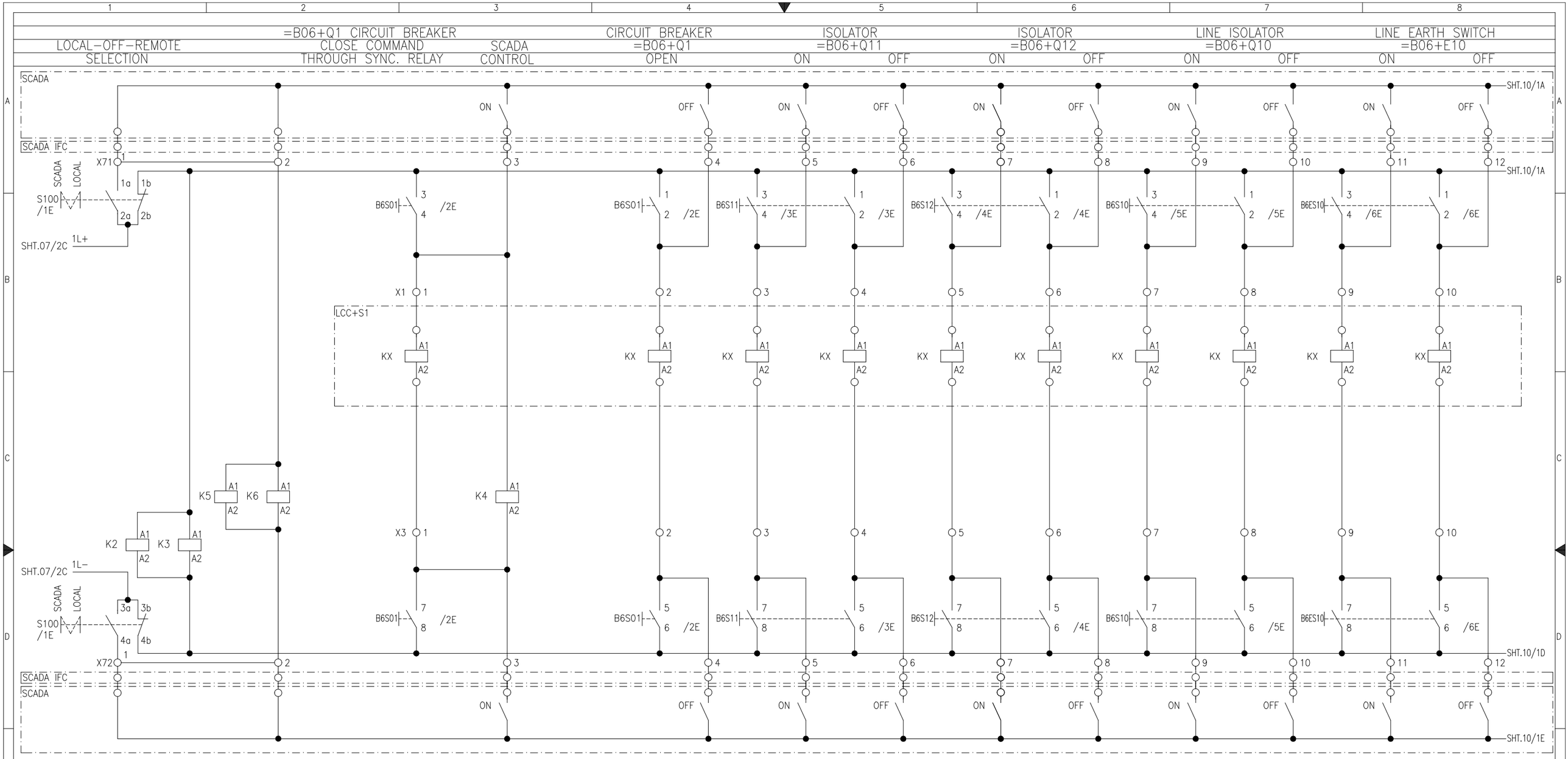

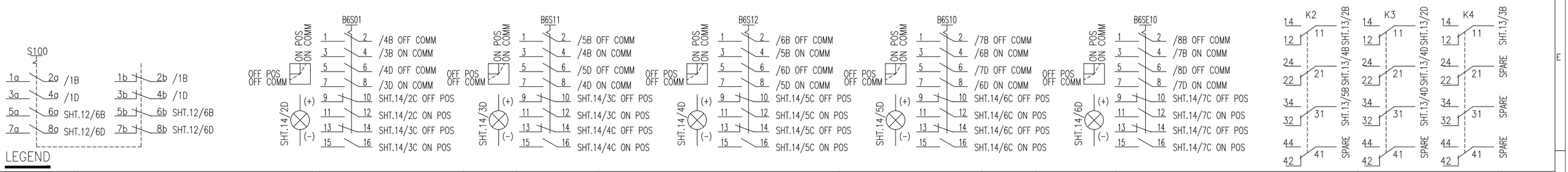

DES:	DESCRIPTION	TYPE	MAKE	DES:	DESCRIPTION	TYPE	MAKE	DES:	DESCRIPTION	TYPE	MAKE
B6S01	CONTROL & DISCREPANCY SWITCH FOR CB	YS-IC4456-S4(49)-PM-K-G-D22	YONGSUNG	S100	LOCAL OFF SCADA SWITCH	YSAK	YONGSUNG				
B6S11,B6S12, B6S10,B6ES10	CONTROL & DISCREPANCY SWITCH FOR ISO	YS-IC4301-R4(49)-PM-K-G-D22	YONGSUNG	K2, K3, K4, K5, K6	CONTACTOR RELAY, 220VDC	PRC	GE				

APPROVED	CHECKED	DRAWN
NAH	MSS	MUR

PROJECT: EDUCATIONAL ORDER NTDC PO# CE/MP&M/M(P)/AM-VI/EO/9417-29 DATED 14.11.2018 FOR THE PROCUREMENT OF 220KV & 500KV RELAY& CONTROL PANELS

CB & DISCONNECTOR's REMOTE CONTROL

500kV CONTROL PANEL TYPE =B06+WC1

EPESOL Pvt. Ltd.
71-B Garden Block, New Garden Town, Lahore, Pakistan

DWG# EPE/ENU-18/B61570 | SHT: 09 OF 38

DATE: 07.03.2019 | AS BUILT | REV: 0

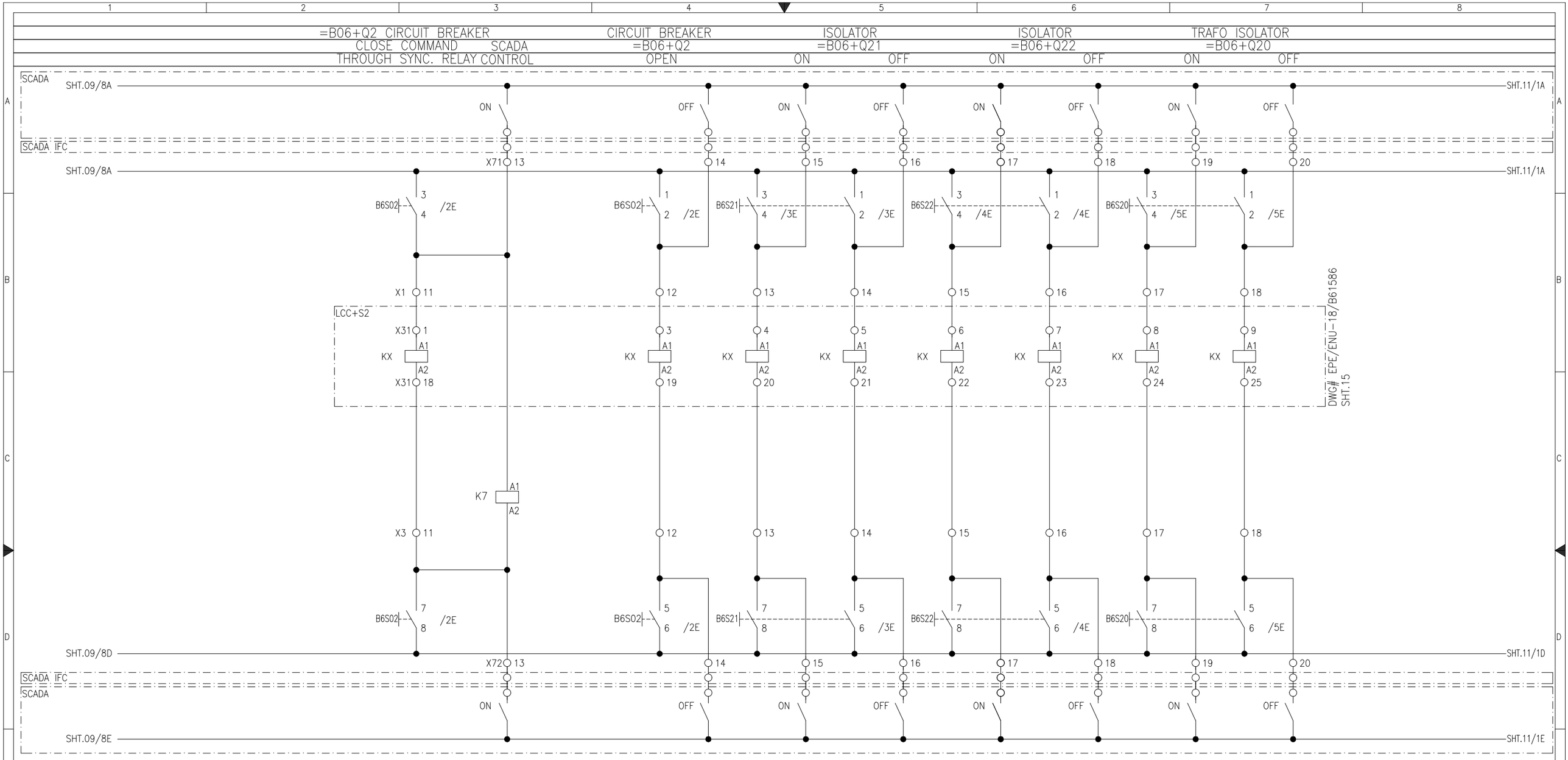

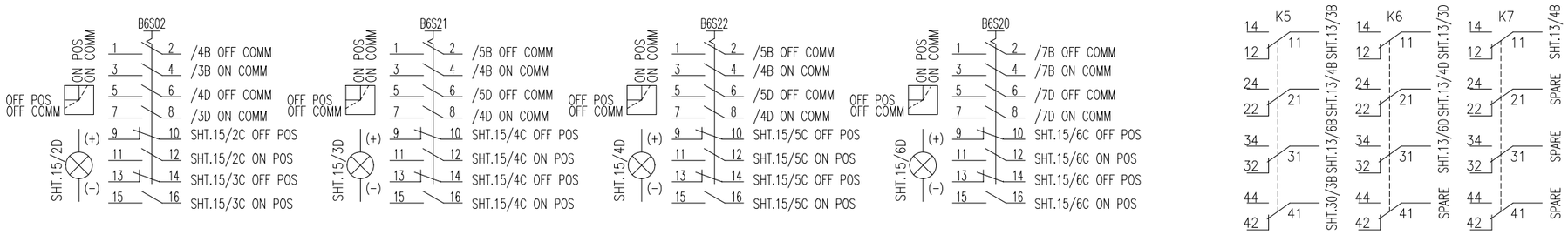

LEGEND

DES:	DESCRIPTION	TYPE	MAKE	DES:	DESCRIPTION	TYPE	MAKE	DES:	DESCRIPTION	TYPE	MAKE
B6S02	CONTROL & DISCREPANCY SWITCH FOR CB	YS-IC4456-S4(49)-PM-K-G-D22	YONGSUNG	K7	CONTACTOR RELAY, 220VDC	PRC	GE				
B6S21,B6S22, B6S20	CONTROL & DISCREPANCY SWITCH FOR ISO	YS-IC4301-R4(49)-PM-K-G-D22	YONGSUNG								

APPROVED	CHECKED	DRAWN
NAH	MSS	MUR

PROJECT: EDUCATIONAL ORDER NTDC PO# CE/MP&M /M(P)/AM-VI/EO/9417-29 DATED 14.11.2018 FOR THE PROCUREMENT OF 220KV & 500KV RELAY& CONTROL PANELS

CB & DISCONNECTOR's
REMOTE CONTROL
500kV CONTROL PANEL TYPE =B06+WC1

EPESOL Pvt. Ltd.
71-B Garden Block, New Garden Town, Lahore, Pakistan

DWG# EPE/ENU-18/B61570 | SHT: 10 OF 38
DATE: 07.03.2019 | AS BUILT | REV: 0

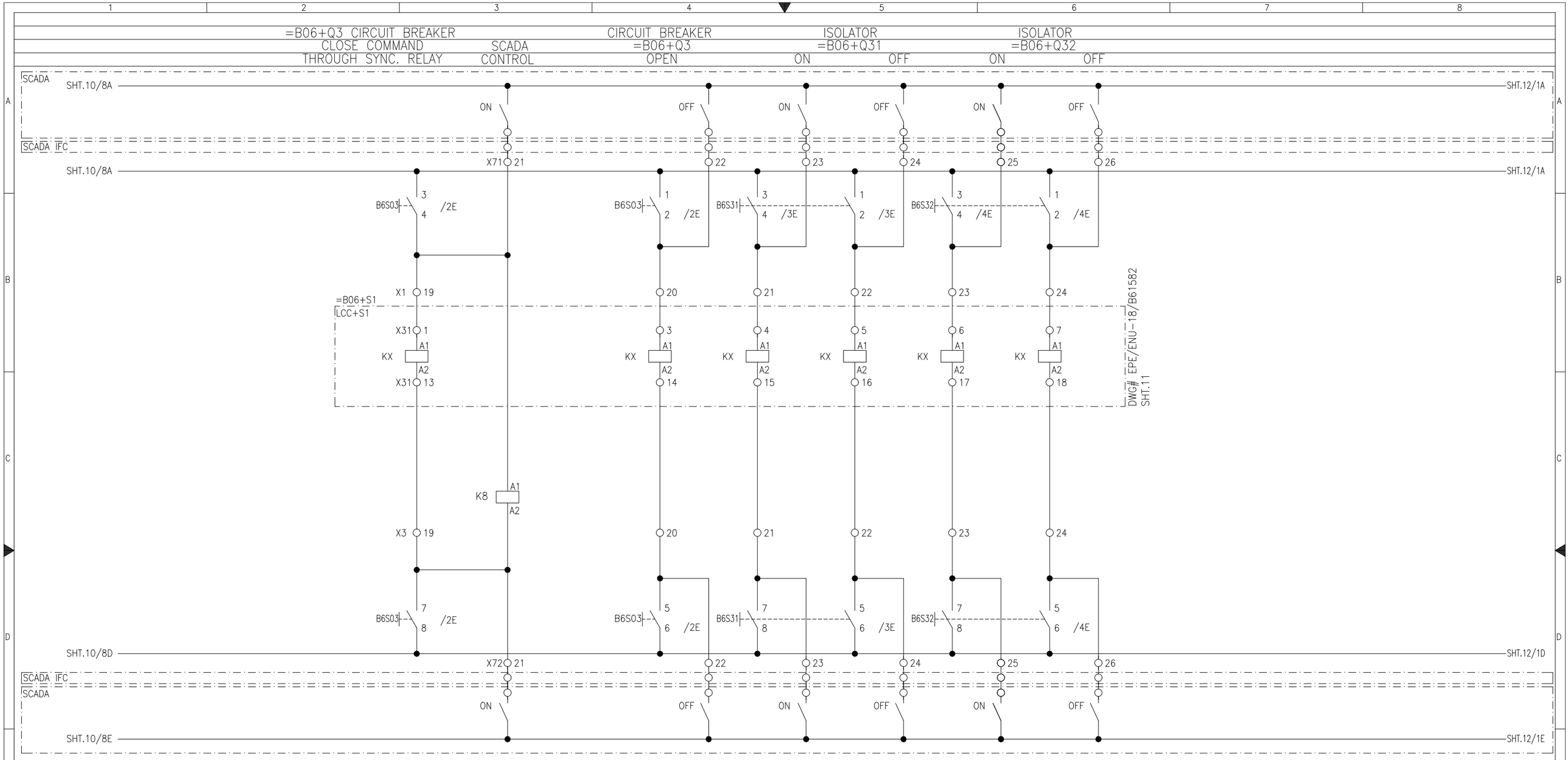

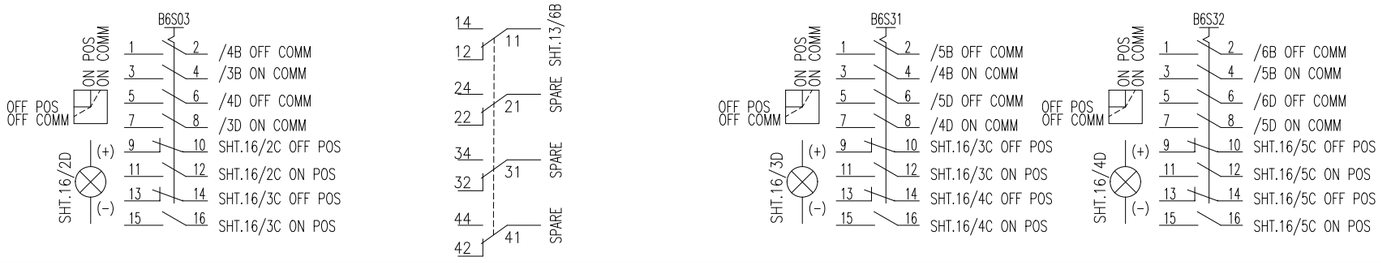

LEGEND

DES:	DESCRIPTION	TYPE	MAKE	DES:	DESCRIPTION	TYPE	MAKE	DES:	DESCRIPTION	TYPE	MAKE
B6S03	CONTROL & DISCREPANCY SWITCH FOR CB	YS-IC4456-S4(49)-PM-K-G-D22	YONGSUNG	K8	CONTACTOR RELAY, 220VDC	PRC	GE				
B6S31,B6S32	CONTROL & DISCREPANCY SWITCH FOR ISO	YS-IC4301-R4(49)-PM-K-G-D22	YONGSUNG								

APPROVED	CHECKED	DRAWN
NAH	MSS	MUR

PROJECT: EDUCATIONAL ORDER NTDC PO# CE/MP&M/M(P)/AM-VI/EO/9417-29 DATED 14.11.2018 FOR THE PROCUREMENT OF 220KV & 500KV RELAY& CONTROL PANELS

CB & DISCONNECTOR's REMOTE CONTROL
500kV CONTROL PANEL TYPE =B06+WC1

EPESOL Pvt. Ltd.
71-B Garden Block, New Garden Town, Lahore, Pakistan

DWG# EPE/ENU-18/B61570 | SHT: 11 OF 38
DATE: 07.03.2019 | AS BUILT | REV: 0

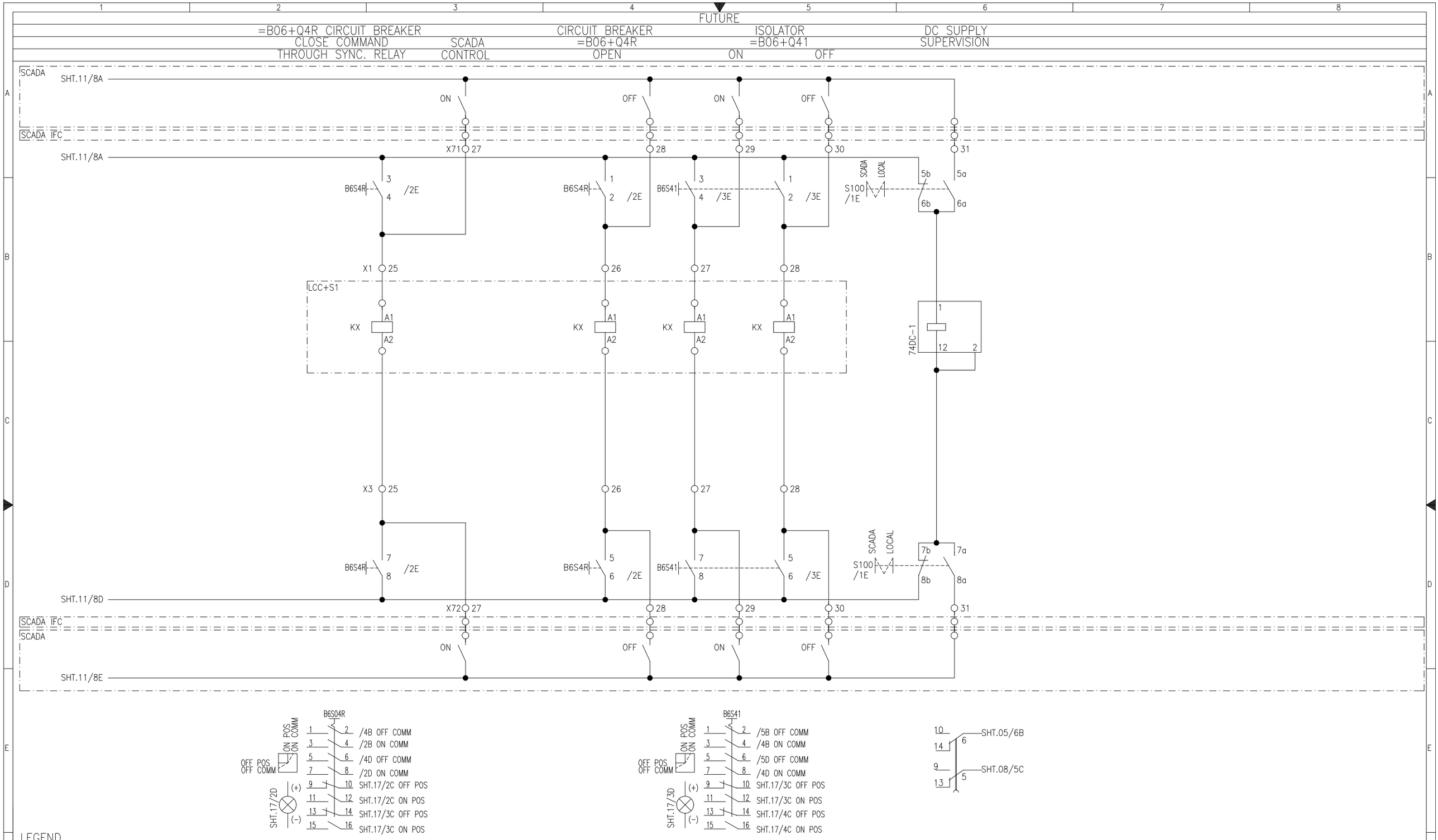

LEGEND

DES:	DESCRIPTION	TYPE	MAKE	DES:	DESCRIPTION	TYPE	MAKE	DES:	DESCRIPTION	TYPE	MAKE
B6S04R	CONTROL & DISCREPANCY SWITCH FOR CB	YS-IC4456-S4(49)-PM-K-G-D22	YONGSUNG	74DC-1	DC SUPPLY SUPERVISION RELAY, 220VDC	VDF10	ARTECHE				
B6S41	CONTROL & DISCREPANCY SWITCH FOR ISO	YS-IC4301-R4(49)-PM-K-G-D22	YONGSUNG								

APPROVED	CHECKED	DRAWN
NAH	MSS	MUR

PROJECT: EDUCATIONAL ORDER NTDC PO# CE/MP&M/M(P)/AM-VI/EO/9417-29 DATED 14.11.2018 FOR THE PROCUREMENT OF 220KV & 500KV RELAY& CONTROL PANELS

SR CB & DISCONNECTOR's REMOTE CONTROL
500kV CONTROL PANEL TYPE =B06+WC1

EPESOL Pvt. Ltd.
71-B Garden Block, New Garden Town, Lahore, Pakistan

DWG# EPE/ENU-18/B61570 | SHT: 12 OF 38
DATE: 07.03.2019 | AS BUILT | REV: 0

500kV CB =B06+Q1		500kV CB =B06+Q3		500kV CB =B06+Q2	
LOCAL SELECTION	REMOTE SELECTION	LOCAL SELECTION	REMOTE SELECTION	LOCAL SELECTION	REMOTE SELECTION

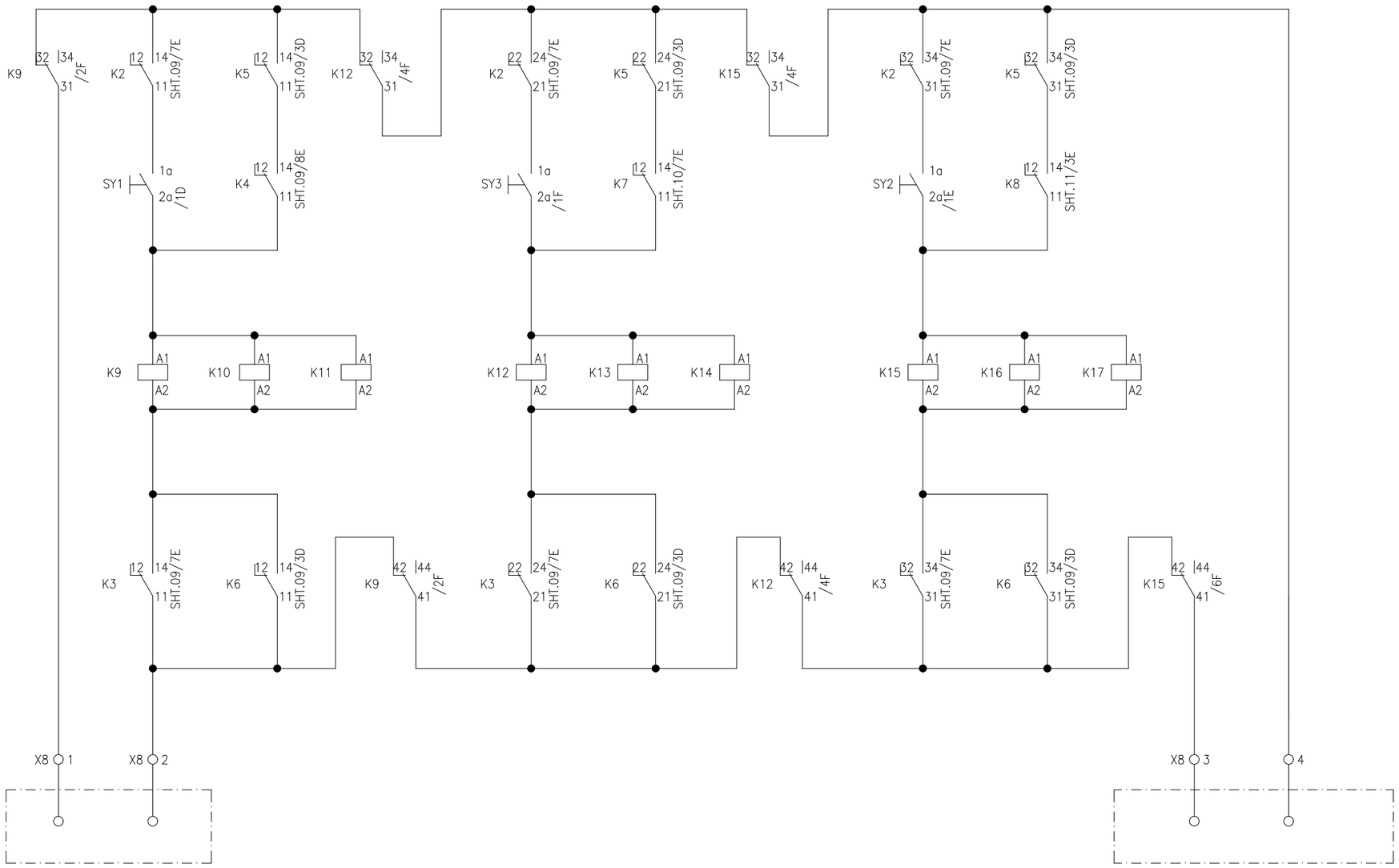

APPROVED	CHECKED	DRAWN	PROJECT:	CB SELECTION FOR SYNCHRONIZING 500kV CONTROL PANEL TYPE =B06+WC1	EPESOL Pvt. Ltd. 71-B Garden Block, New Garden Town, Lahore, Pakistan	DWG# EPE/ENU-18/B61570	SHT: 13OF 38
NAH	MSS	MUR	EDUCATIONAL ORDER NTDC PO# CE/MP&M /M(P)/AM-VI/EO/9417-29 DATED 14.11.2018 FOR THE PROCUREMENT OF 220KV & 500KV RELAY& CONTROL PANELS			DATE: 07.03.2019 AS BUILT	REV: 0

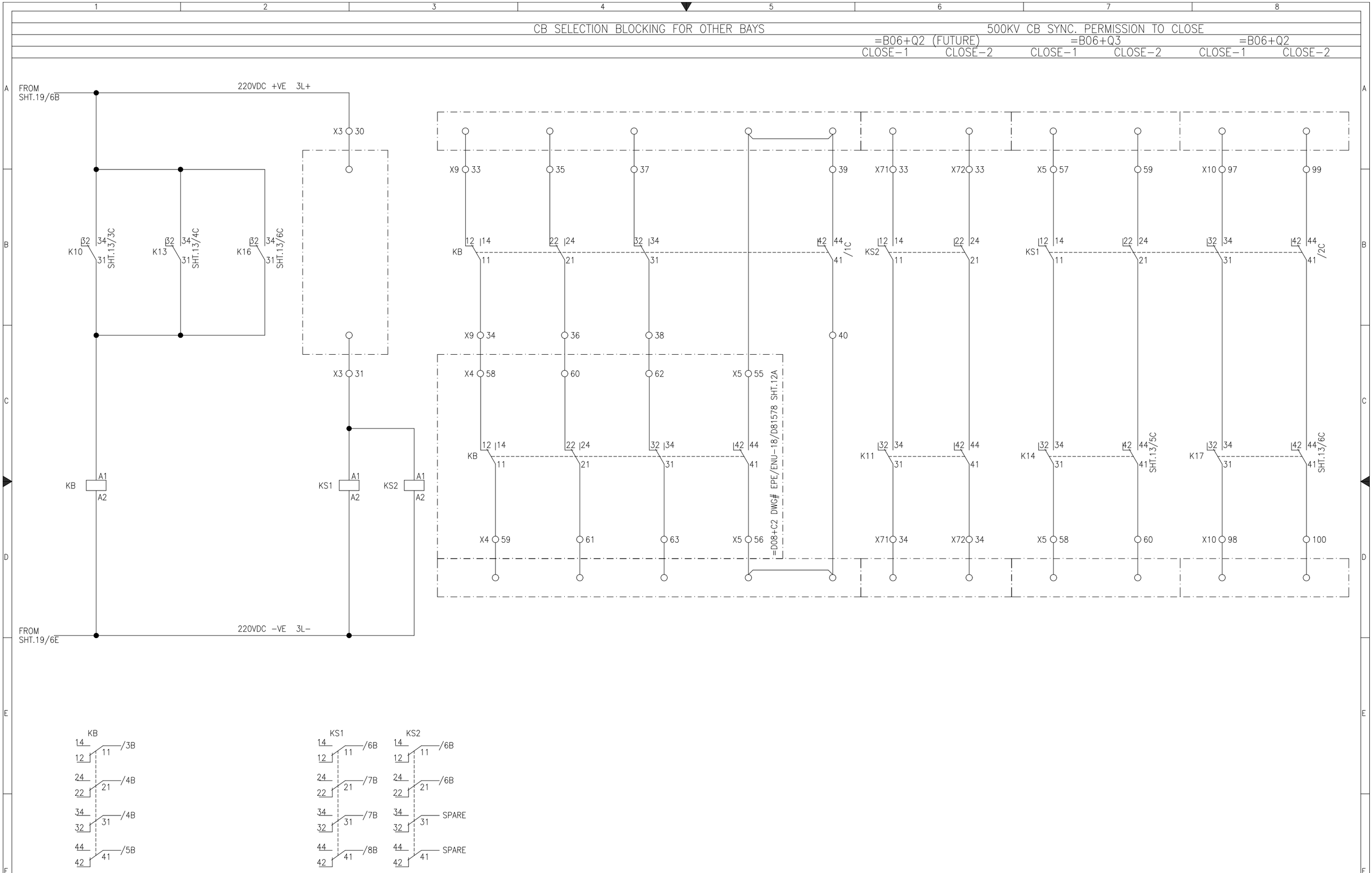

APPROVED	CHECKED	DRAWN	PROJECT: EDUCATIONAL ORDER NTDC PO# CE/MP&M /M(P)/AM-VI/EO/9417-29 DATED 14.11.2018 FOR THE PROCUREMENT OF 220KV & 500KV RELAY& CONTROL PANELS	CB SELECTION BLOCKING FOR SYNC. CIRCUIT 500kV CONTROL PANEL TYPE =B06+WC1	EPESOL Pvt. Ltd. 71-B Garden Block, New Garden Town, Lahore, Pakistan	DWG# EPE/ENU-18/B61570	SHT:13AOF 38
NAH	MSS	MUR				DATE: 07.03.2019 AS BUILT	REV: 0

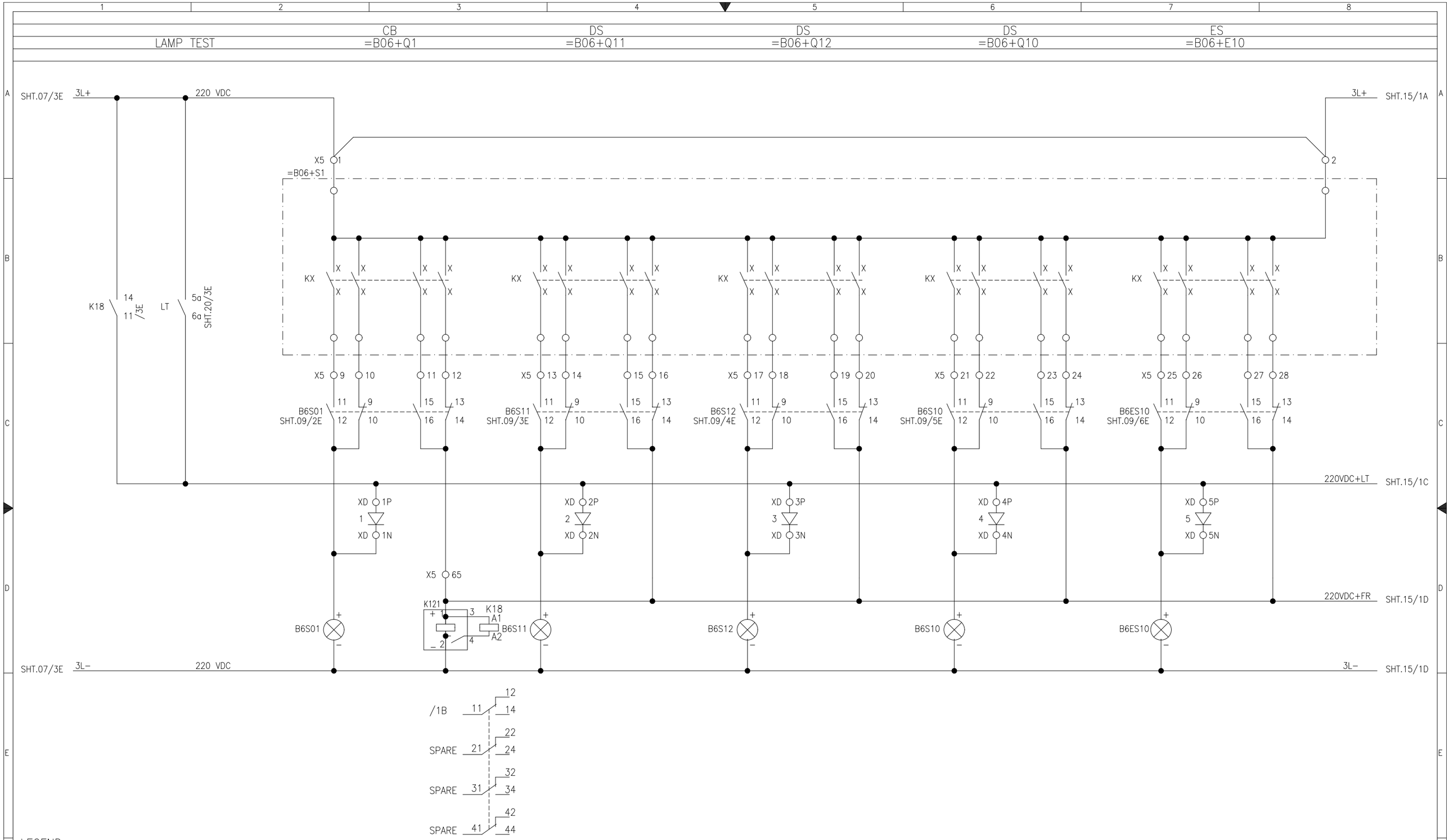

LEGEND

DES:	DESCRIPTION	TYPE	MAKE	DES:	DESCRIPTION	TYPE	MAKE	DES:	DESCRIPTION	TYPE	MAKE
B6S01	CONTROL & DISCREPANCY SWITCH FOR CB	YS-IC4456-S(49)-PM-K-G-D22	YONGSUNG	LT	LAMP TEST	YSAP1	YONGSUNG	K18	AUX. RELAY, 220VDC WITH 4 C/O	PRC	GE
B6S11, B6S12 B6S10, B6SE10	CONTROL & DISCREPANCY SWITCH FOR DS	YS-IC4301-R(49)-PM-K-G-D22	YONGSUNG	K121	FLASHER RELAY	FR101	E-LABS				

APPROVED	CHECKED	DRAWN
NAH	MSS	MUR

PROJECT: EDUCATIONAL ORDER NTDC PO# CE/MP&M /M(P)/AM-VI/EO/9417-29 DATED 14.11.2018 FOR THE PROCUREMENT OF 220KV & 500KV RELAY& CONTROL PANELS

DESCREPANCY INITIATION

500kV CONTROL PANEL TYPE =B06+WC1

EPESOL Pvt. Ltd.
71-B Garden Block, New Garden Town, Lahore, Pakistan

DWG# EPE/ENU-18/B61570 | SHT: 14 OF 38
DATE: 07.03.2019 | AS BUILT | REV: 0

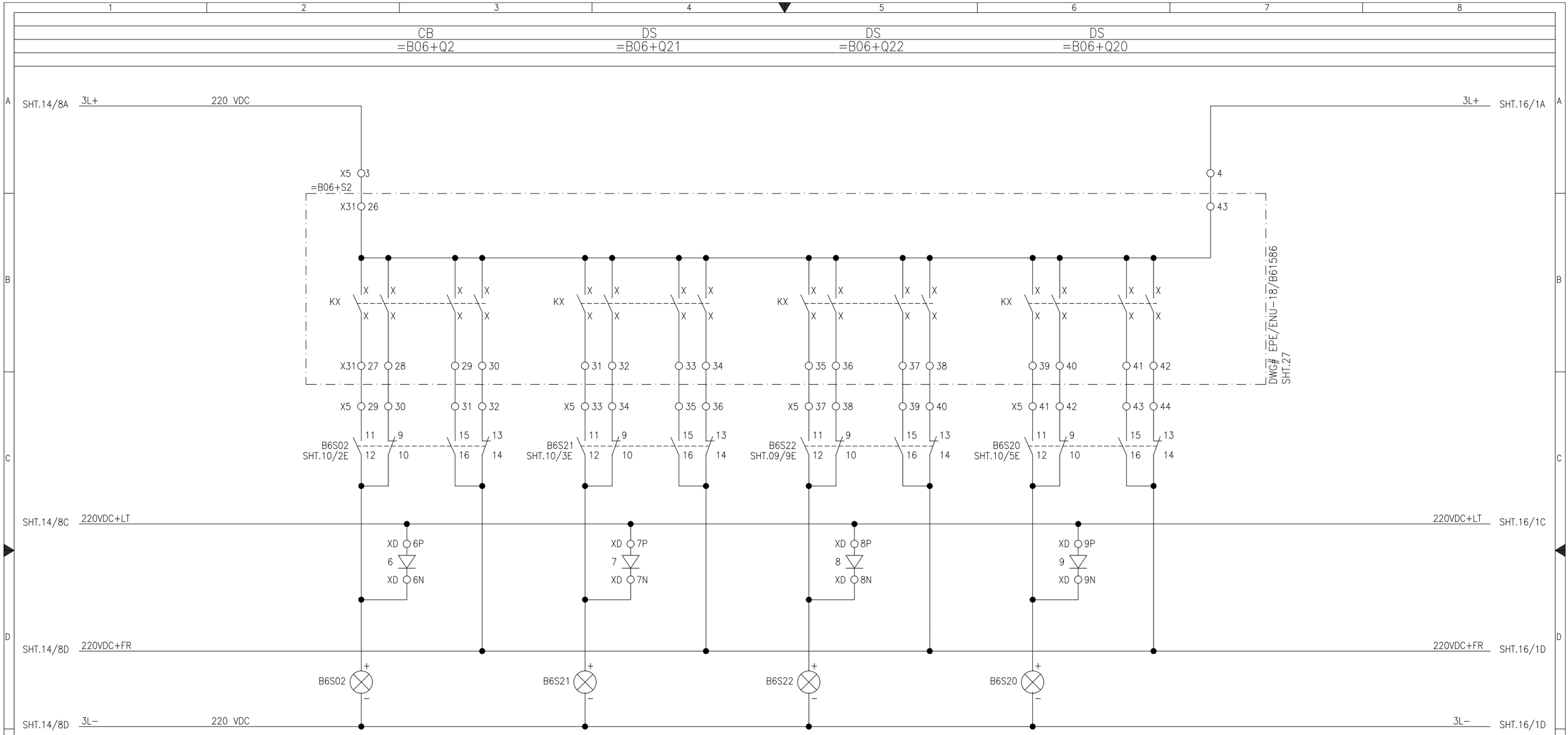

LEGEND

DES:	DESCRIPTION	TYPE	MAKE	DES:	DESCRIPTION	TYPE	MAKE	DES:	DESCRIPTION	TYPE	MAKE
B6S02	CONTROL & DISCREPANCY SWITCH FOR CB	YS-IC4456-S(49)-PM-K-G-D22	YONGSUNG								
B6S21, B6S22 B6S20	CONTROL & DISCREPANCY SWITCH FOR DS	YS-IC4301-R(49)-PM-K-G-D22	YONGSUNG								

APPROVED	CHECKED	DRAWN
NAH	MSS	MUR

PROJECT: EDUCATIONAL ORDER NTDC PO# CE/MP&M /M(P)/AM-VI/EO/9417-29 DATED 14.11.2018 FOR THE PROCUREMENT OF 220KV & 500KV RELAY& CONTROL PANELS

DESCREPANCY INITIATION

500kV CONTROL PANEL TYPE =B06+WC1

EPESOL Pvt. Ltd.

71-B Garden Block, New Garden Town, Lahore, Pakistan

DWG# EPE/ENU-18/B61570

SHT: 15OF 38

DATE: 07.03.2019

AS BUILT

REV: 0

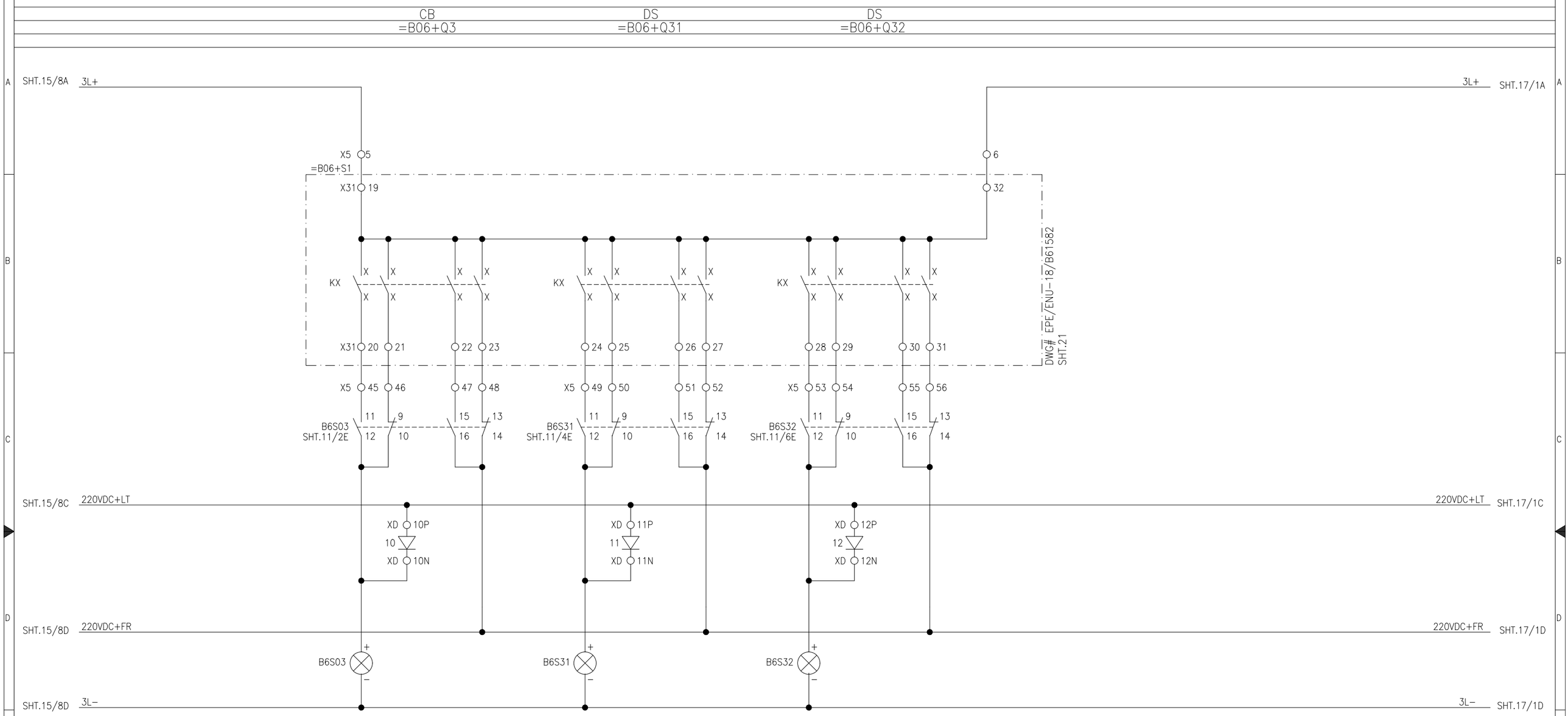

LEGEND

DES:	DESCRIPTION	TYPE	MAKE	DES:	DESCRIPTION	TYPE	MAKE	DES:	DESCRIPTION	TYPE	MAKE
B6S03	CONTROL & DISCREPANCY SWITCH FOR CB	YS-IC4456-S(49)-PM-K-G-D22	YONGSUNG								
B6S31, B6S32	CONTROL & DISCREPANCY SWITCH FOR DS	YS-IC4301-R(49)-PM-K-G-D22	YONGSUNG								

APPROVED	CHECKED	DRAWN
NAH	MSS	MUR

PROJECT: EDUCATIONAL ORDER NTDC PO# CE/MP&M /M(P)/AM-VI/EO/9417-29 DATED 14.11.2018 FOR THE PROCUREMENT OF 220KV & 500KV RELAY& CONTROL PANELS

DESCREPANCY INITIATION

500kV CONTROL PANEL TYPE =B06+WC1

EPESOL Pvt. Ltd.
71-B Garden Block, New Garden Town, Lahore, Pakistan

DWG# EPE/ENU-18/B61570 | SHT: 16OF 38

DATE: 07.03.2019 | AS BUILT | REV: 0

FUTURE

CB	DS
=B06+Q04R	=B06+S41

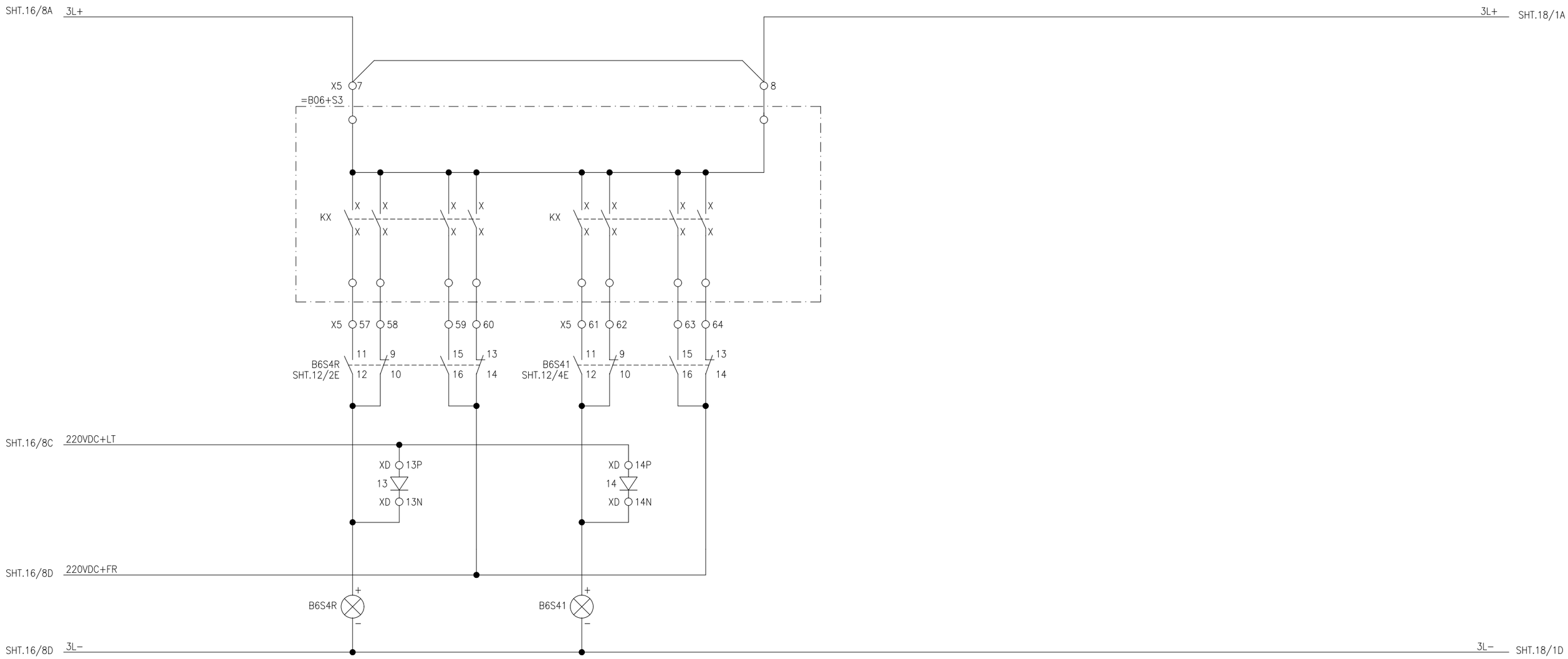

LEGEND

DES:	DESCRIPTION	TYPE	MAKE	DES:	DESCRIPTION	TYPE	MAKE	DES:	DESCRIPTION	TYPE	MAKE
B6S4R	CONTROL & DISCREPANCY SWITCH FOR CB	YS-IC4456-S(49)-PM-K-G-D11	YONGSUNG								
B6S41	CONTROL & DISCREPANCY SWITCH FOR DS	YS-IC4301-R(49)-PM-K-G-D11	YONGSUNG								

APPROVED	CHECKED	DRAWN
NAH	MSS	MUR

PROJECT: EDUCATIONAL ORDER NTDC PO# CE/MP&M /M(P)/AM-VI/EO/9417-29 DATED 14.11.2018 FOR THE PROCUREMENT OF 220KV & 500KV RELAY& CONTROL PANELS

DESCREPANCY INITIATION

500kV CONTROL PANEL TYPE =B06+WC1

EPESOL Pvt. Ltd.
71-B Garden Block, New Garden Town, Lahore, Pakistan

DWG# EPE/ENU-18/B61570 | SHT: 17OF 38

DATE: 07.03.2019 | AS BUILT | REV: 0

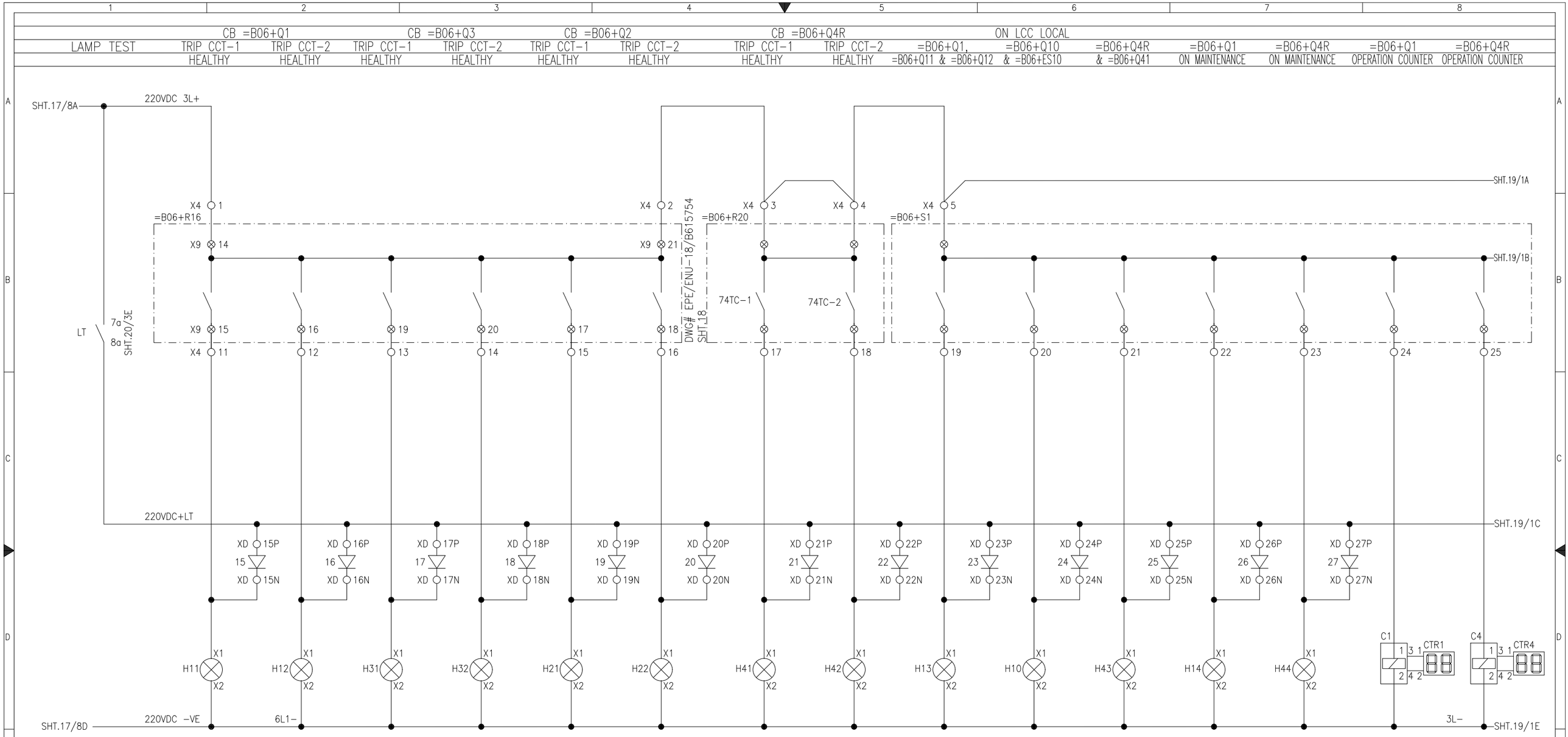

LEGEND

DES:	DESCRIPTION	TYPE	MAKE	DES:	DESCRIPTION	TYPE	MAKE	DES:	DESCRIPTION	TYPE	MAKE
H14, H44	INDICATION LAMP FOR MAINTENANCE, RED COLOR	YS-PL	YONGSUNG	H11,H12,H31,H32	INDICATION LAMP FOR TRIP CKT HEALTHY	YS-PL	YONGSUNG	H13,H10,H43	INDICATION LAMP FOR LCC LOCAL, GREEN COLOR	YS-PL	YONGSUNG
C1, C4	OPERATION COUNTER, 220VDC	CTR	E-LAB	H21,H22,H41,H42	INDICATION LAMP FOR TRIP CKT HEALTHY	YS-PL	YONGSUNG				

APPROVED	CHECKED	DRAWN	PROJECT:	TRIP SUPPLY HEALTHY INDICATIONS	EPESOL Pvt. Ltd.	DWG# EPE/ENU-18/B61570	SHT: 18OF 38
NAH	MSS	MUR	EDUCATIONAL ORDER NTDC PO# CE/MP&M /M(P)/AM-VI/EO/9417-29 DATED 14.11.2018 FOR THE PROCUREMENT OF 220KV & 500KV RELAY& CONTROL PANELS	500kV CONTROL PANEL TYPE =B06+WC1	71-B Garden Block, New Garden Town, Lahore, Pakistan	DATE: 07.03.2019 AS BUILT	REV: 0

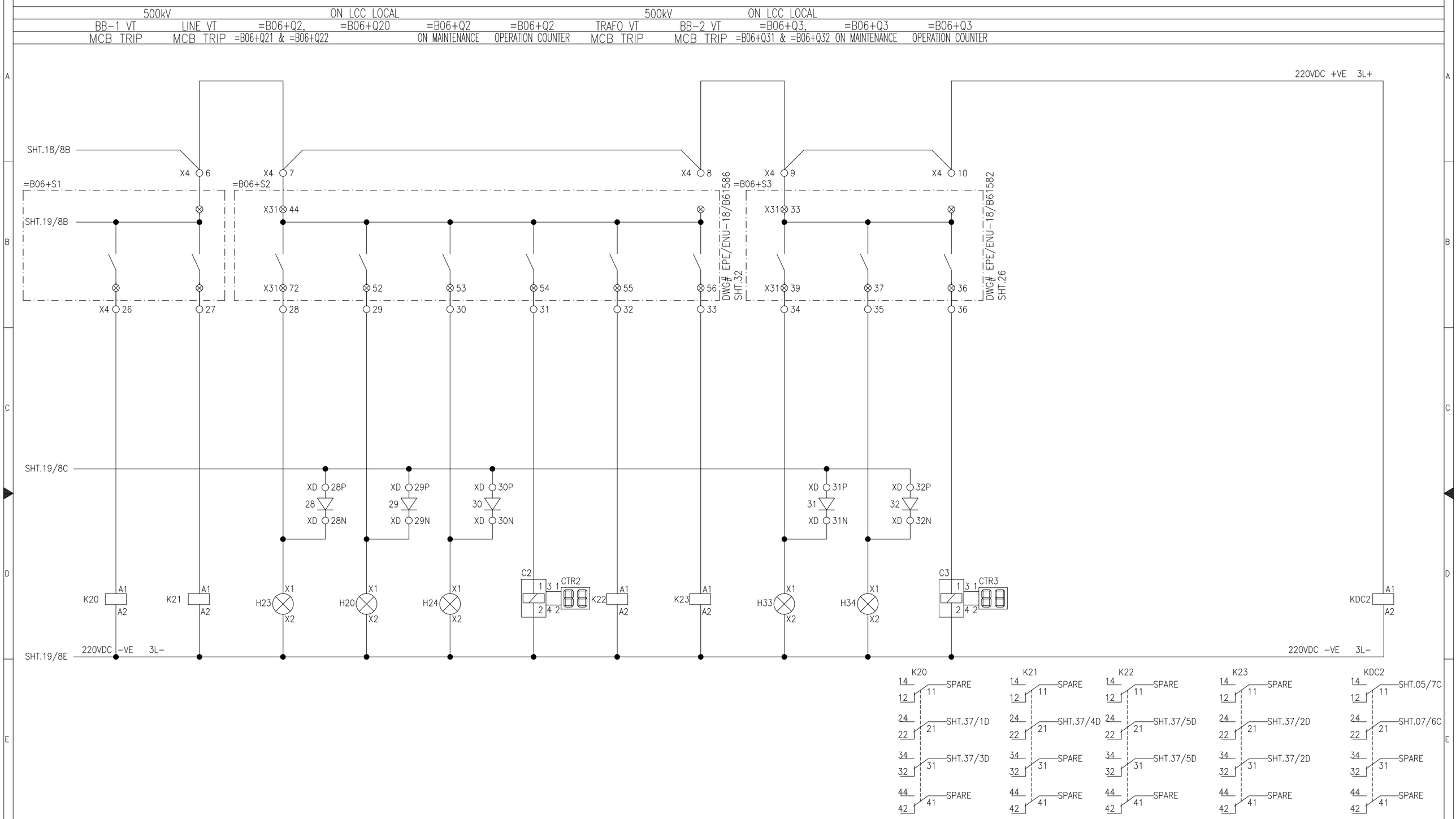

LEGEND

DES:	DESCRIPTION	TYPE	MAKE	DES:	DESCRIPTION	TYPE	MAKE	DES:	DESCRIPTION	TYPE	MAKE
K20, K21, K22, K23	AUX. RELAY, 220VDC WITH 4 C/O	PRC	GE	C2, C3	OPERATION COUNTER, 220VDC	CTR	E-LAB				
H23, H33, H20	INDICATION LAMP FOR LCC LOCAL, GREEN COLOR	PRC	GE	H24,H34	INDICATION LAMP FOR CB MAINTENANCE, RED COLOR	YS-PL	YONGSUNG				

APPROVED	CHECKED	DRAWN
NAH	MSS	MUR

PROJECT: EDUCATIONAL ORDER NTDC PO# CE/MP&M /M(P)/AM-VI/EO/9417-29 DATED 14.11.2018 FOR THE PROCUREMENT OF 220KV & 500KV RELAY& CONTROL PANELS

TRIP SUPPLY HEALTHY INDICATIONS

500kV CONTROL PANEL TYPE =B06+WC1

EPESOL Pvt. Ltd.
71-B Garden Block, New Garden Town, Lahore, Pakistan

DWG# EPE/ENU-18/B61570 | SHT: 19OF 38
DATE: 07.03.2019 | AS BUILT | REV: 0

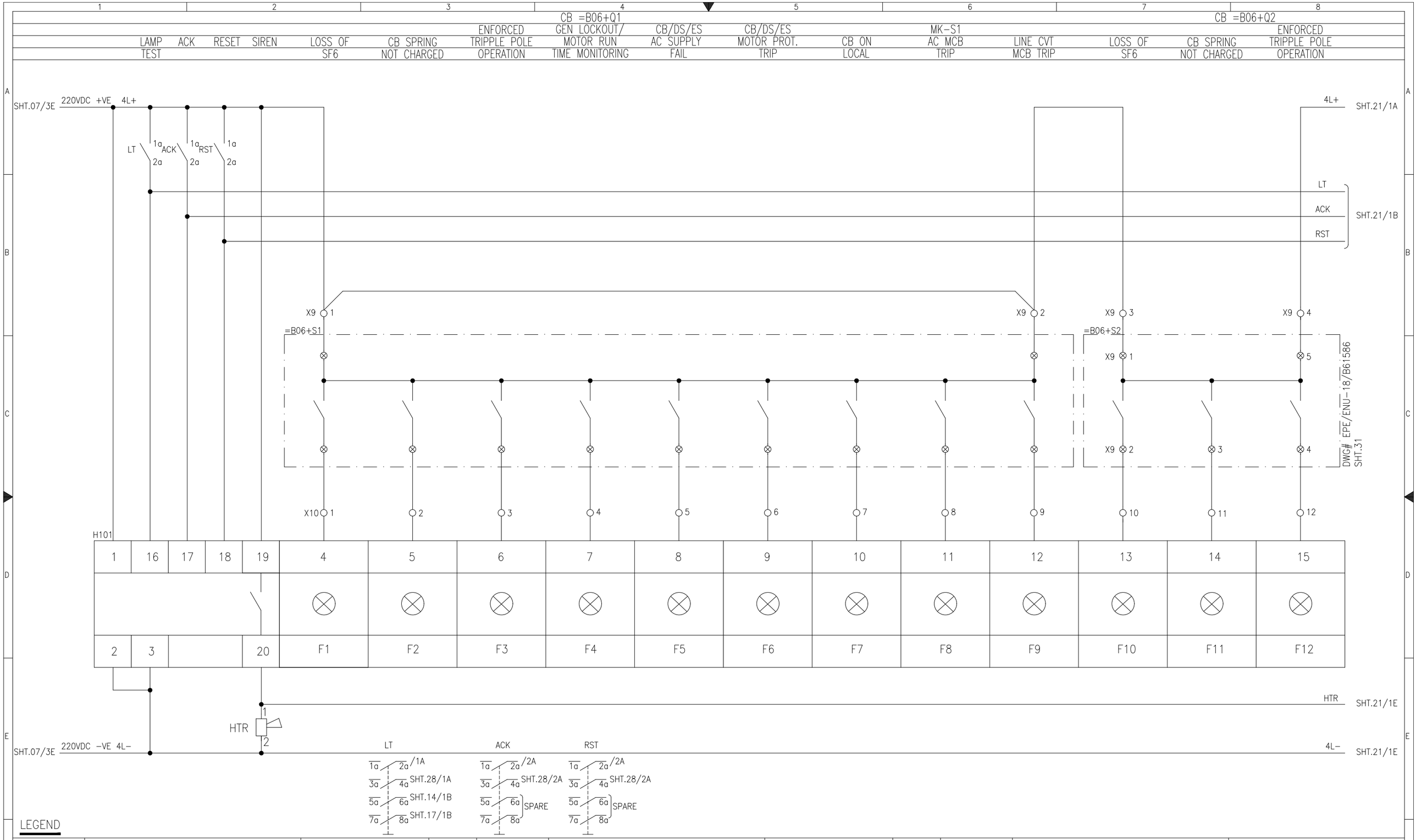

LEGEND

DES:	DESCRIPTION	TYPE	MAKE	DES:	DESCRIPTION	TYPE	MAKE	DES:	DESCRIPTION	TYPE
H101	ANNUNCIATOR TWELVE WINDOW, 220VDC	AM101	E-LAB							
LT/ACK/RST	PUSH BUTTON	YSAP1	YONGSUNG							

APPROVED	CHECKED	DRAWN	PROJECT:			
NAH	MSS	MUR	EDUCATIONAL ORDER NTDC PO# CE/MP&M /M(P)/AM-VI/EO/9417-29 DATED 14.11.2018 FOR THE PROCUREMENT OF 220KV & 500KV RELAY& CONTROL PANELS	ANNUNCIATOR UNIT-1 500kV CONTROL PANEL TYPE =B06+WC1	EPESOL Pvt. Ltd. 71-B Garden Block, New Garden Town, Lahore, Pakistan	DWG# EPE/ENU-18/B61570
						DATE: 07.03.2019 AS BUILT

SHT: 20OF 38

REV: 0

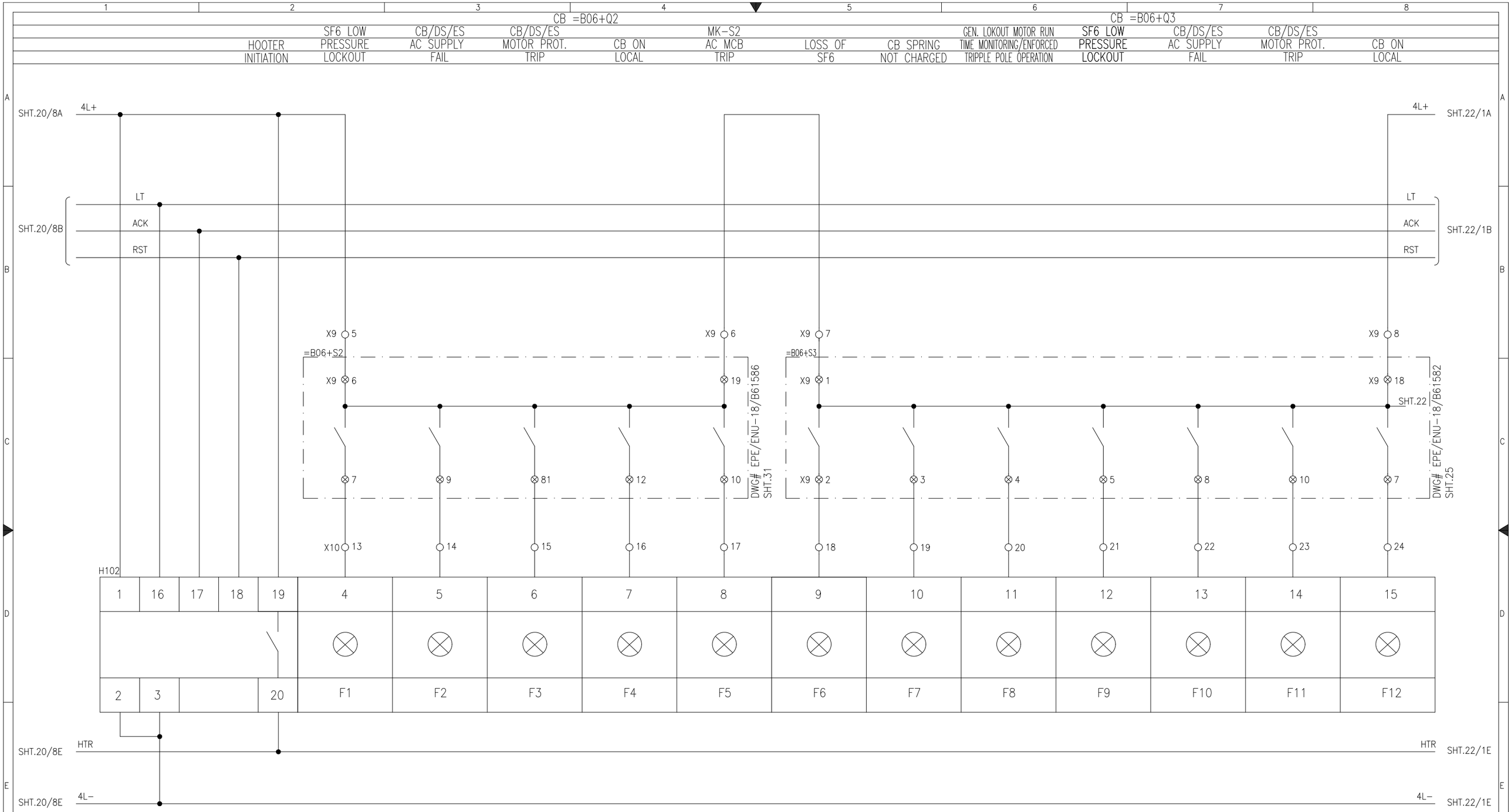

LEGEND

DES:	DESCRIPTION	TYPE	MAKE	DES:	DESCRIPTION	TYPE	MAKE	DES:	DESCRIPTION	TYPE
H102	ANNUNCIATOR TWELVE WINDOW, 220VDC	AM101	E-LAB							

APPROVED	CHECKED	DRAWN	PROJECT:			
NAH	MSS	MUR	EDUCATIONAL ORDER NTDC PO# CE/MP&M /M(P)/AM-VI/EO/9417-29 DATED 14.11.2018 FOR THE PROCUREMENT OF 220KV & 500KV RELAY& CONTROL PANELS	ANNUNCIATOR UNIT-2 500kV CONTROL PANEL TYPE =B06+WC1	EPESOL Pvt. Ltd. 71-B Garden Block, New Garden Town, Lahore, Pakistan	DWG# EPE/ENU-18/B61570
						DATE: 07.03.2019 AS BUILT

SHT: 21 OF 38

REV: 0

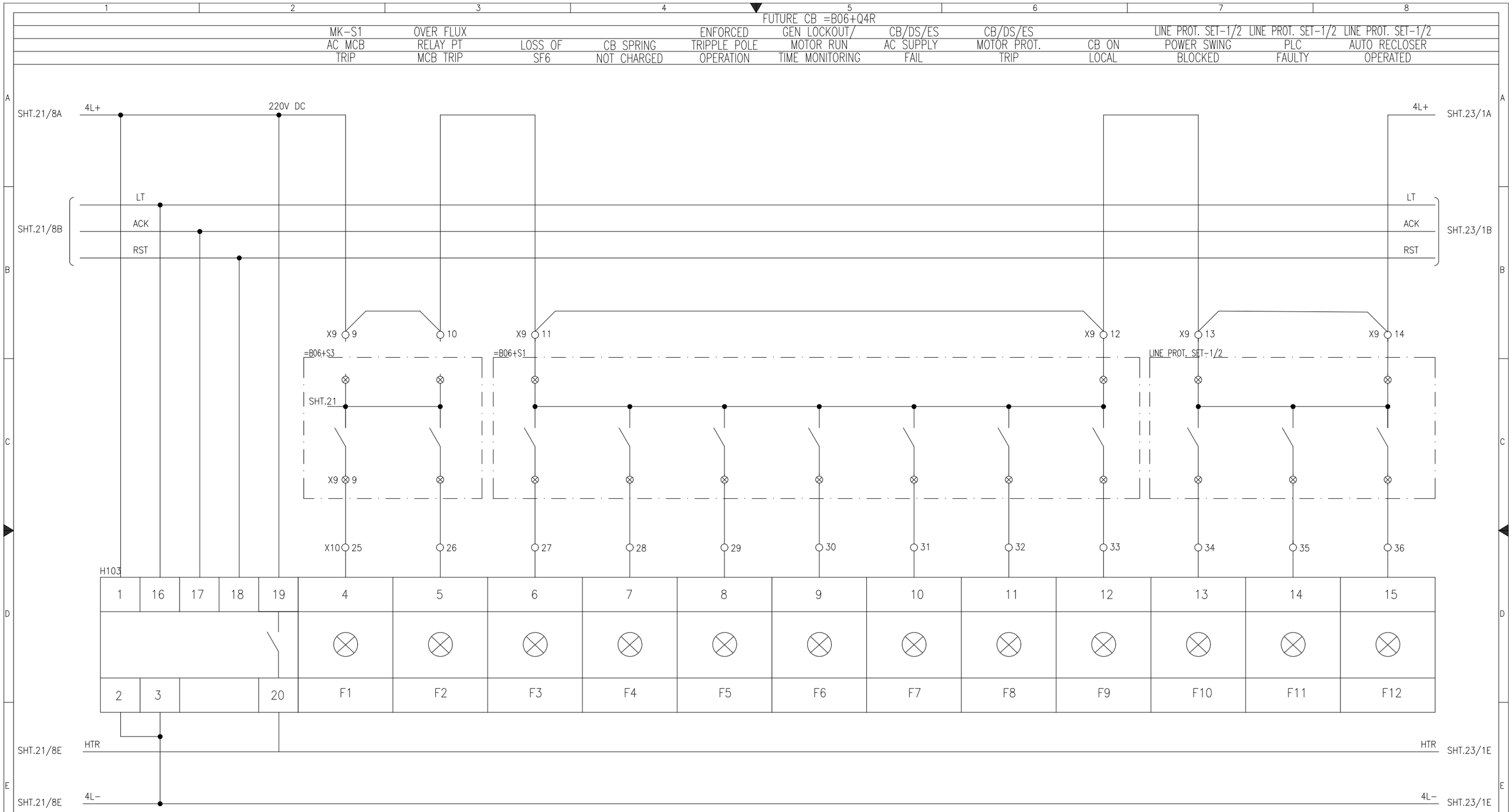

NOTE:
TO BE SHORTED AT SITE.

LEGEND

DES:	DESCRIPTION	TYPE	MAKE	DES:	DESCRIPTION	TYPE	MAKE	DES:	DESCRIPTION	TYPE
H103	ANNUNCIATOR TWELVE WINDOW, 220VDC	AM101	E-LAB							

APPROVED	CHECKED	DRAWN	PROJECT:			
NAH	MSS	MUR	EDUCATIONAL ORDER NTDC PO# CE/MP&M /M(P)/AM-VI/EO/9417-29 DATED 14.11.2018 FOR THE PROCUREMENT OF 220KV & 500KV RELAY& CONTROL PANELS	ANNUNCIATOR UNIT-3 500kV CONTROL PANEL TYPE =B06+WC1	EPESOL Pvt. Ltd. 71-B Garden Block, New Garden Town, Lahore, Pakistan	DWG# EPE/ENU-18/B61570
						DATE: 07.03.2019 AS BUILT

SHT: 22 OF 38
REV: 0

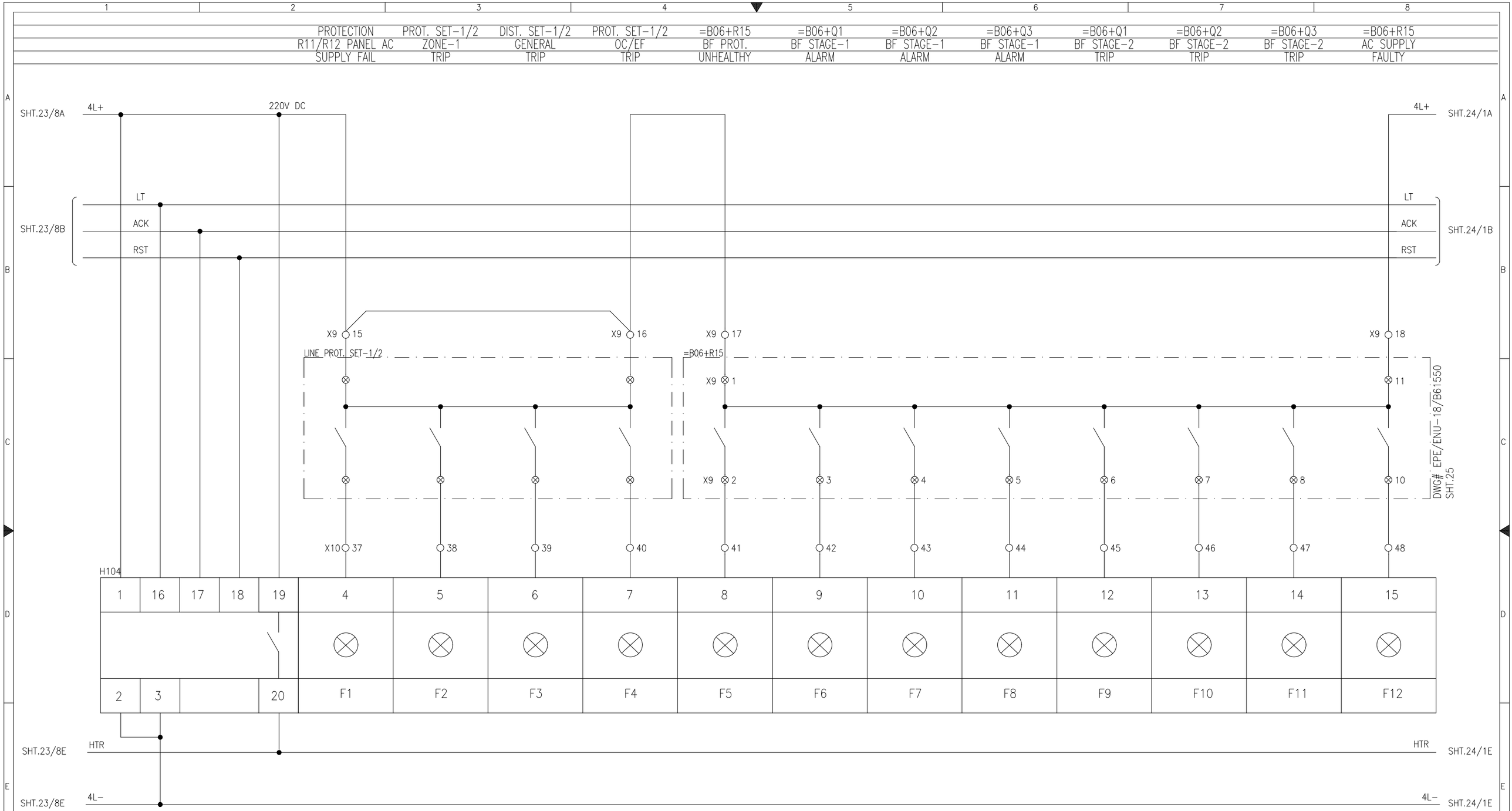

LEGEND

DES:	DESCRIPTION	TYPE	MAKE	DES:	DESCRIPTION	TYPE	MAKE	DES:	DESCRIPTION	TYPE
H104	ANNUNCIATOR TWELVE WINDOW, 220VDC	AM101	E-LAB							

APPROVED	CHECKED	DRAWN
NAH	MSS	MUR

PROJECT: EDUCATIONAL ORDER NTDC PO# CE/MP&M /M(P)/AM-VI/EO/9417-29 DATED 14.11.2018 FOR THE PROCUREMENT OF 220KV & 500KV RELAY& CONTROL PANELS

ANNUNCIATOR UNIT-4

500kV CONTROL PANEL TYPE =B06+WC1

EPESOL Pvt. Ltd.
71-B Garden Block, New Garden Town, Lahore, Pakistan

DWG# EPE/ENU-18/B61570 | SHT: 23OF 38
DATE: 07.03.2019 | AS BUILT | REV: 0

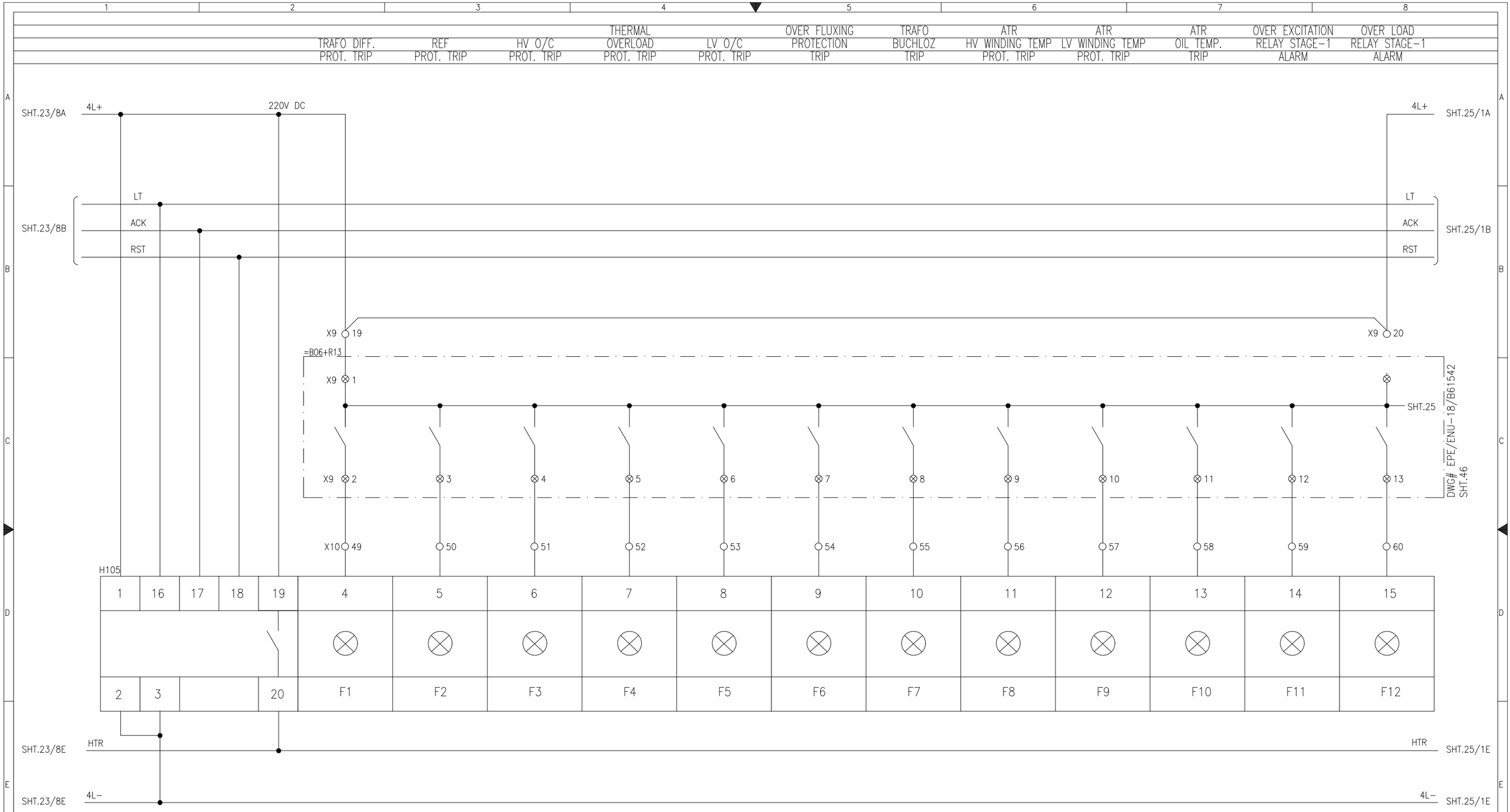

NOTE:
TO BE SHORTED AT SITE.

LEGEND

DES:	DESCRIPTION	TYPE	MAKE	DES:	DESCRIPTION	TYPE	MAKE	DES:	DESCRIPTION	TYPE
H105	ANNUNCIATOR TWELVE WINDOW, 220VDC	AM101	E-LAB							

APPROVED	CHECKED	DRAWN	PROJECT:	ANNUNCIATOR UNIT-5	EPESOL Pvt. Ltd.	DWG# EPE/ENU-18/B61570	SHT: 24 OF 38
NAH	MSS	MUR	EDUCATIONAL ORDER NTDC PO# CE/MP&M /M(P)/AM-VI/EO/9417-29 DATED 14.11.2018 FOR THE PROCUREMENT OF 220KV & 500KV RELAY& CONTROL PANELS	500kV CONTROL PANEL TYPE =B06+WC1	71-B Garden Block, New Garden Town, Lahore, Pakistan	DATE: 07.03.2019 AS BUILT	REV: 0

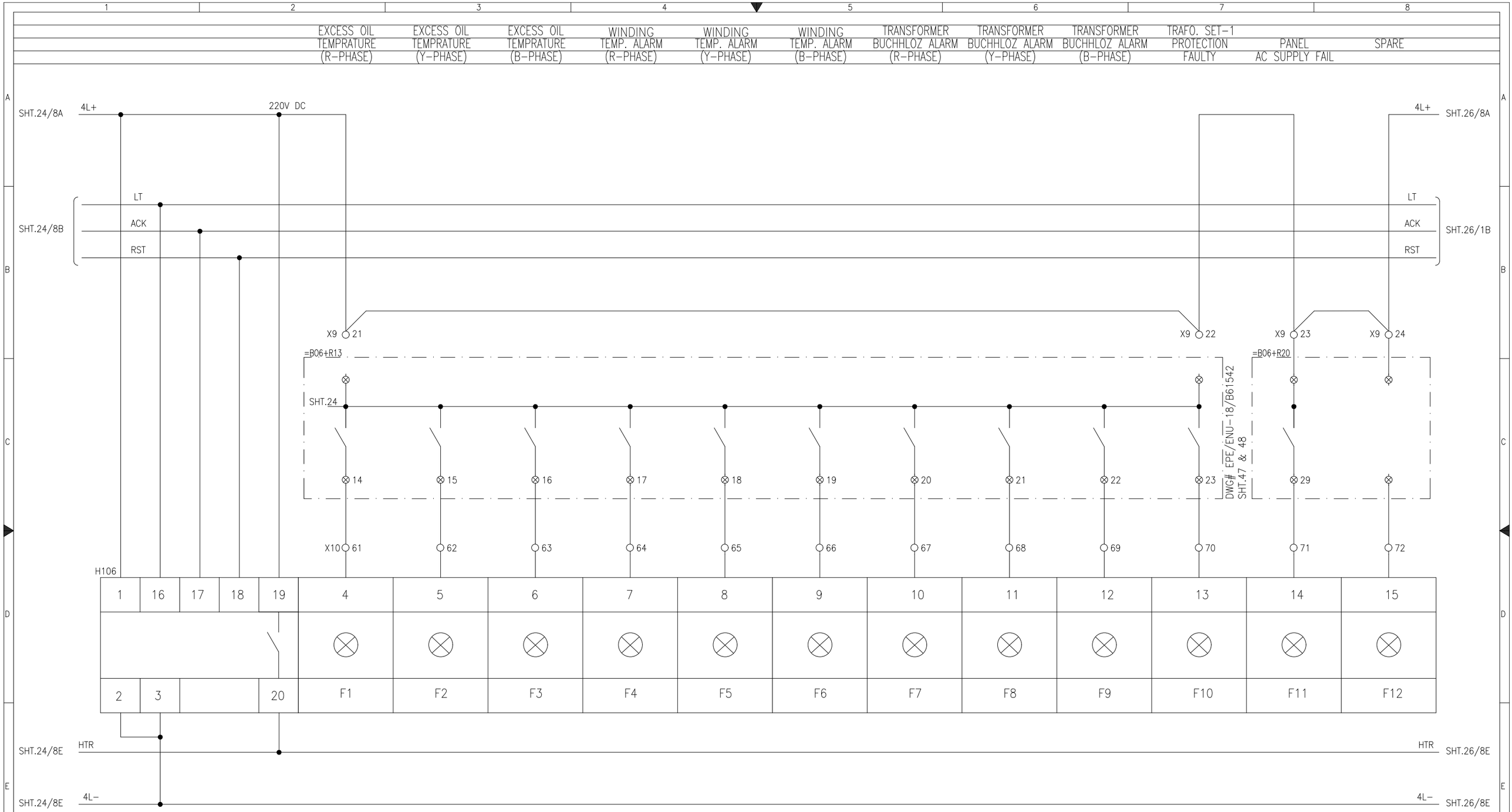

NOTE:
TO BE SHORTED AT SITE.

LEGEND

DES:	DESCRIPTION	TYPE	MAKE	DES:	DESCRIPTION	TYPE	MAKE	DES:	DESCRIPTION	TYPE
H106	ANNUNCIATOR TWELVE WINDOW, 220VDC	AM101	E-LAB							

APPROVED	CHECKED	DRAWN
NAH	MSS	MUR

PROJECT: EDUCATIONAL ORDER NTDC PO# CE/MP&M /M(P)/AM-VI/EO/9417-29 DATED 14.11.2018 FOR THE PROCUREMENT OF 220KV & 500KV RELAY& CONTROL PANELS

ANNUNCIATOR UNIT-6

500kV CONTROL PANEL TYPE =B06+WC1

EPESOL Pvt. Ltd.
71-B Garden Block, New Garden Town, Lahore, Pakistan

DWG# EPE/ENU-18/B61570 | SHT: 25OF 38
DATE: 07.03.2019 | AS BUILT | REV: 0

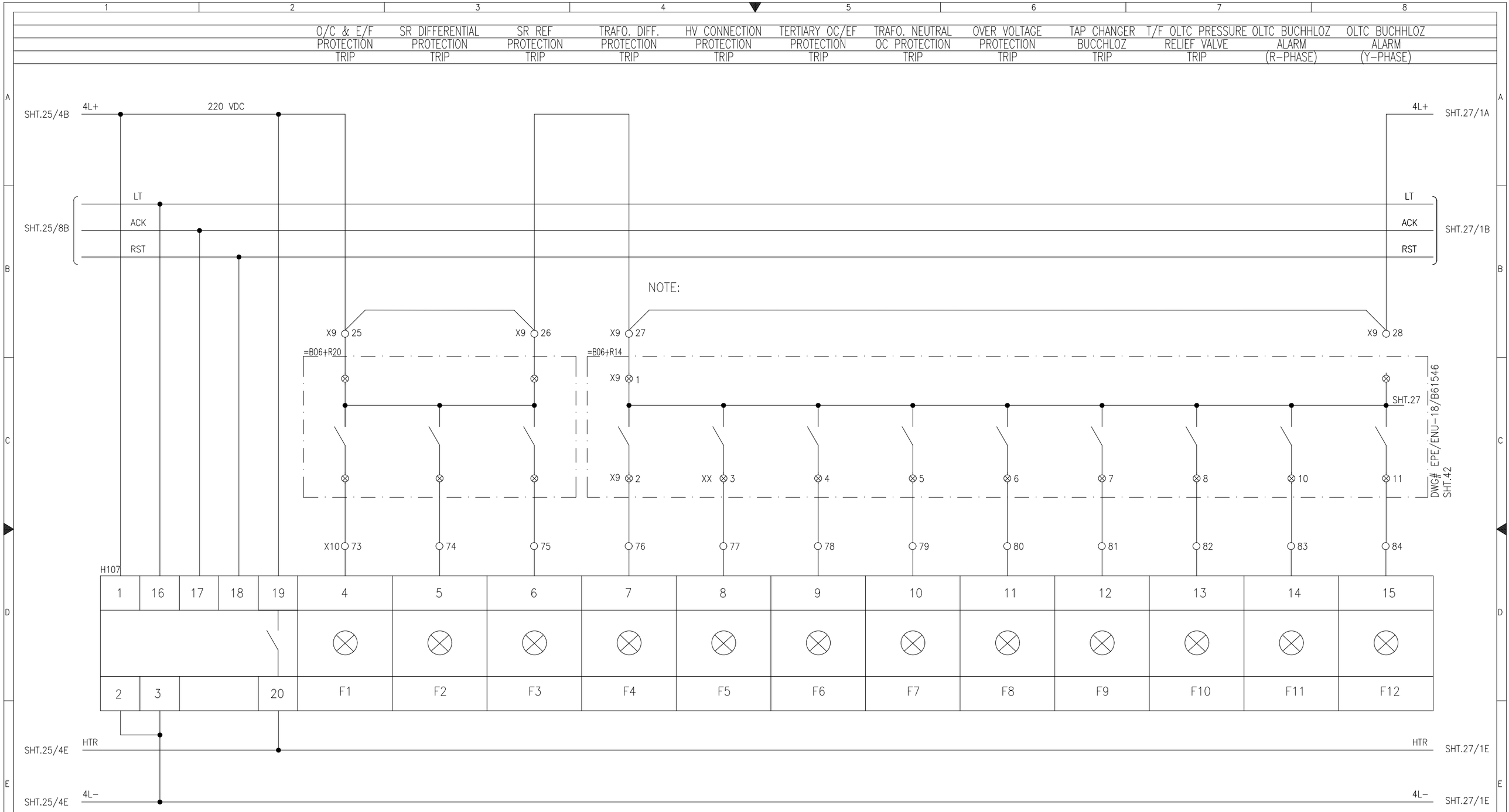

NOTE:
TO BE SHORTED AT SITE.

LEGEND

DES:	DESCRIPTION	TYPE	MAKE	DES:	DESCRIPTION	TYPE	MAKE	DES:	DESCRIPTION	TYPE
H107	ANNUNCIATOR TWELVE WINDOW, 220VDC	AM101	E-LAB							

APPROVED	CHECKED	DRAWN	PROJECT:	ANNUNCIATOR UNIT-7	EPESOL Pvt. Ltd.	DWG# EPE/ENU-18/B61570	SHT: 26OF 38
NAH	MSS	MUR	EDUCATIONAL ORDER NTDC PO# CE/MP&M /M(P)/AM-VI/EO/9417-29 DATED 14.11.2018 FOR THE PROCUREMENT OF 220KV & 500KV RELAY& CONTROL PANELS	500kV CONTROL PANEL TYPE =B06+WC1	71-B Garden Block, New Garden Town, Lahore, Pakistan	DATE: 07.03.2019 AS BUILT	REV: 0

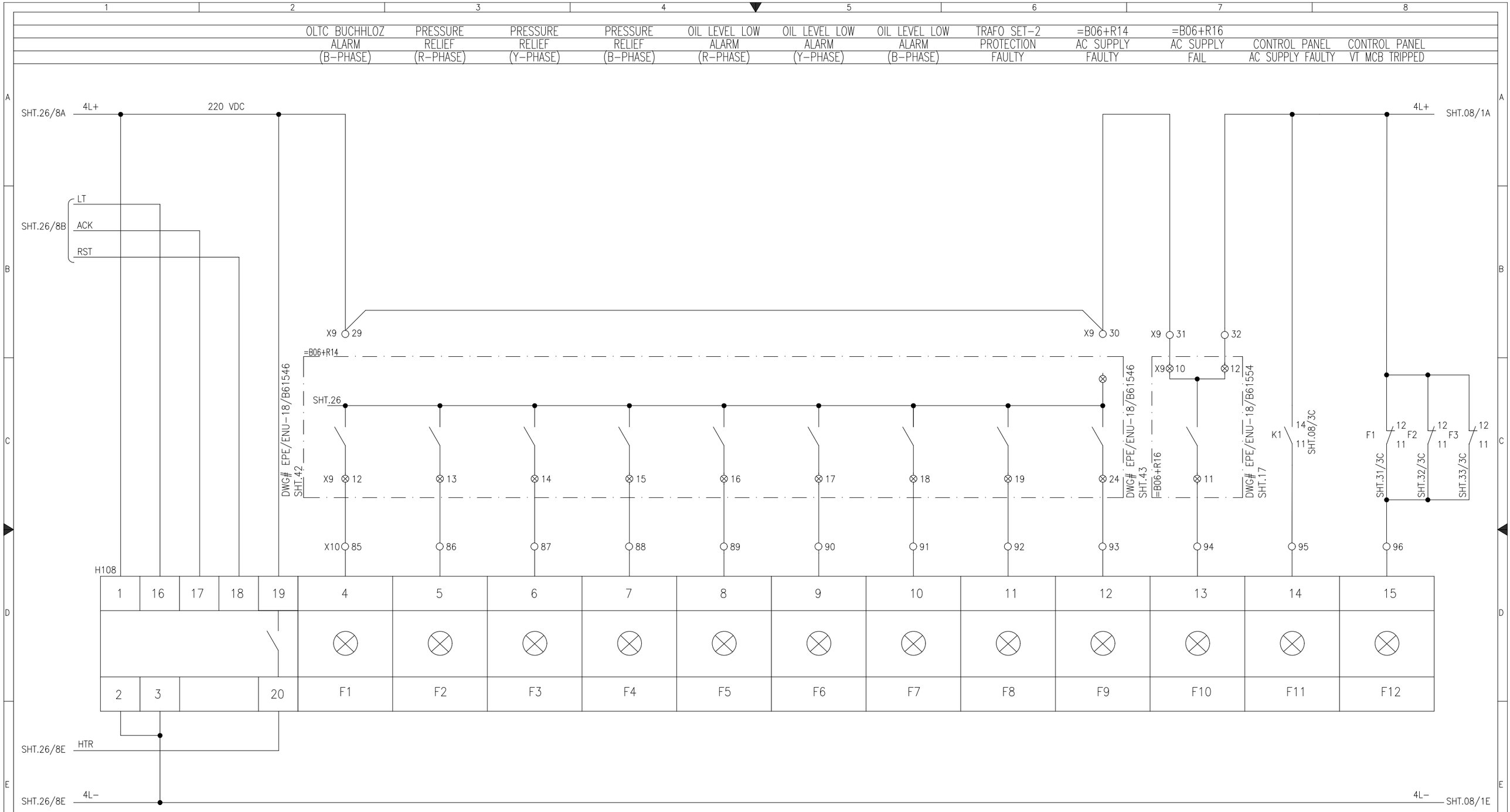

NOTE:
TO BE SHORTED AT SITE.

LEGEND

DES:	DESCRIPTION	TYPE	MAKE	DES:	DESCRIPTION	TYPE	MAKE	DES:	DESCRIPTION	TYPE	MAKE
H108	ANNUNCIATOR TWELVE WINDOW, 220VDC	AM101	E-LAB								

APPROVED	CHECKED	DRAWN
NAH	MSS	MUR

PROJECT: EDUCATIONAL ORDER NTDC PO# CE/MP&M /M(P)/AM-VI/EO/9417-29 DATED 14.11.2018 FOR THE PROCUREMENT OF 220KV & 500KV RELAY& CONTROL PANELS

ANNUNCIATOR UNIT-8

500kV CONTROL PANEL TYPE =B06+WC1

EPESOL Pvt. Ltd.
71-B Garden Block, New Garden Town, Lahore, Pakistan

DWG# EPE/ENU-18/B61570 | SHT: 27OF 38
DATE: 07.03.2019 | AS BUILT | REV: 0

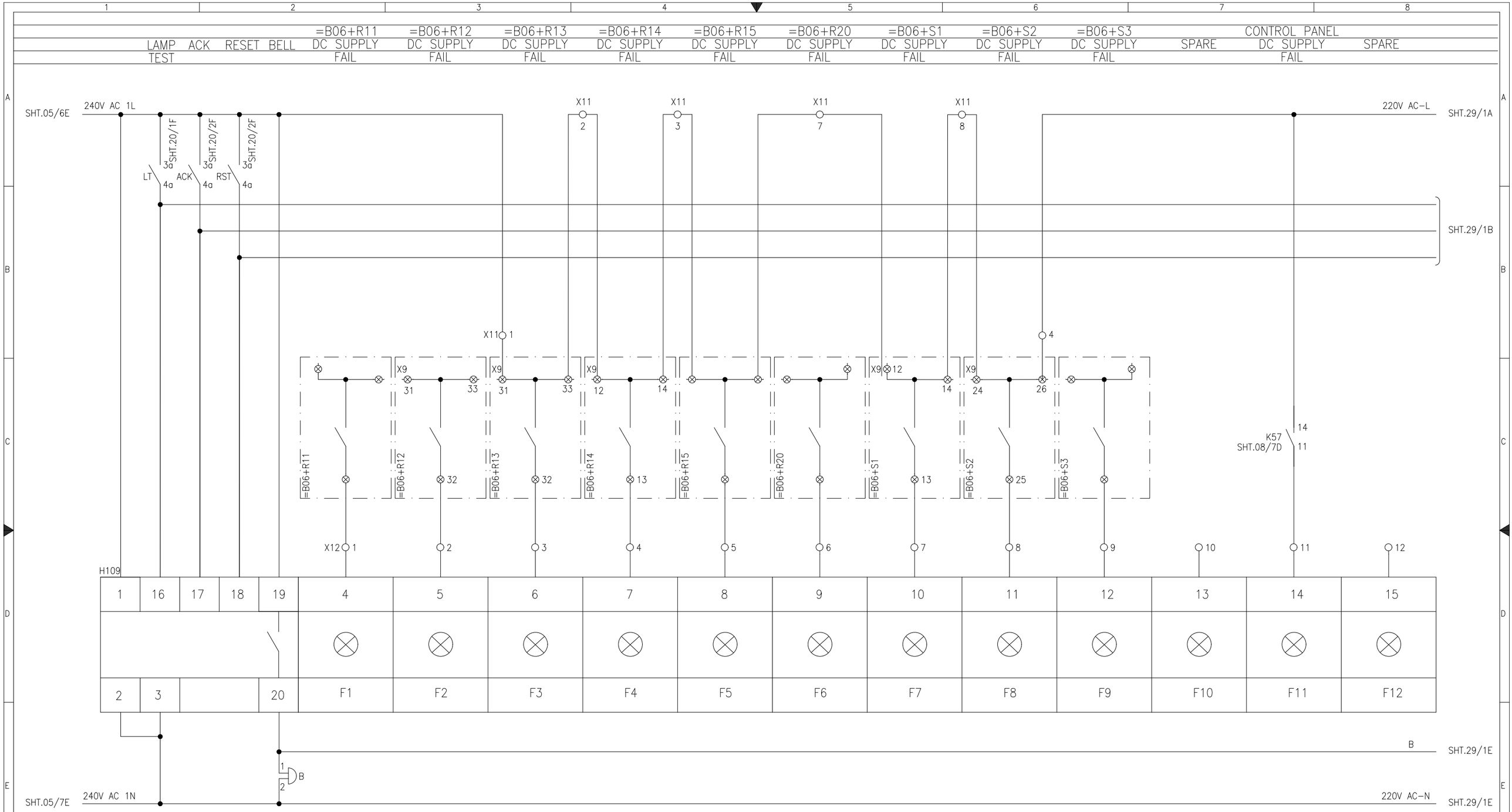

LEGEND

DES:	DESCRIPTION	TYPE	MAKE	DES:	DESCRIPTION	TYPE	MAKE	DES:	DESCRIPTION	TYPE	MAKE
H109	ANNUNCIATOR TWELVE WINDOW, 220VAC	AM101	E-LAB								
B	BELL FOR ALARM FUNCTION, 220VAC	YSMB	YONGSUNG								

APPROVED	CHECKED	DRAWN
NAH	MSS	MUR

PROJECT: EDUCATIONAL ORDER NTDC PO# CE/MP&M /M(P)/AM-VI/EO/9417-29 DATED 14.11.2018 FOR THE PROCUREMENT OF 220KV & 500KV RELAY& CONTROL PANELS

ANNUNCIATOR UNIT-9

500kV CONTROL PANEL TYPE =B06+WC1

EPESOL Pvt. Ltd.
71-B Garden Block, New Garden Town, Lahore, Pakistan

DWG# EPE/ENU-18/B61570 | SHT: 28OF 38
DATE: 07.03.2019 | AS BUILT | REV: 0

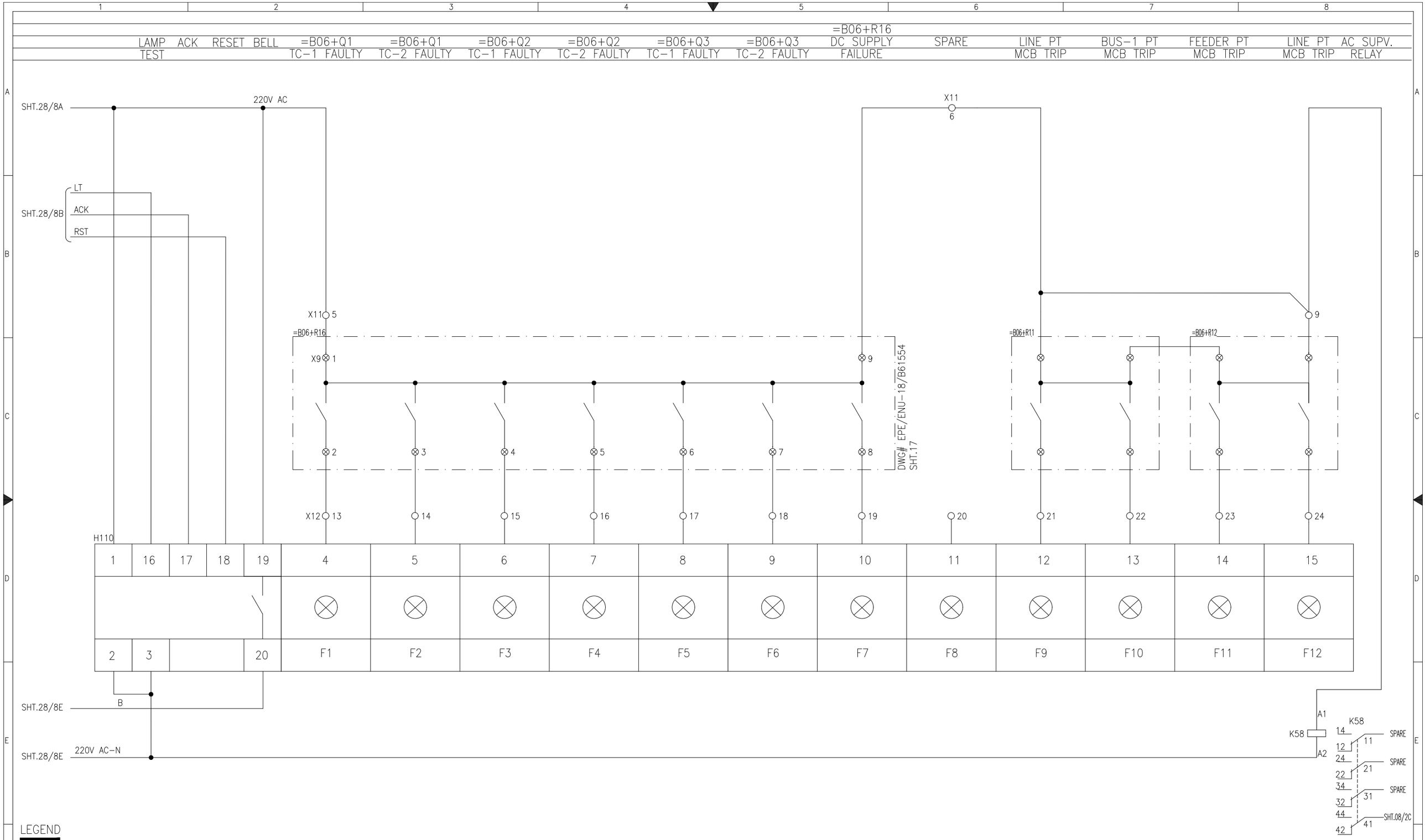

LEGEND

DES:	DESCRIPTION	TYPE	MAKE	DES:	DESCRIPTION	TYPE	MAKE	DES:	DESCRIPTION	TYPE	MAKE
H110	ANNUNCIATOR TWELVE WINDOW, 220VAC	AM101	E-LAB								
K58	AUX. RELAY, 220VAC WITH 4 C/O	PRC	GE								

APPROVED	CHECKED	DRAWN
NAH	MSS	MUR

PROJECT: EDUCATIONAL ORDER NTDC PO# CE/MP&M /M(P)/AM-VI/EO/9417-29 DATED 14.11.2018 FOR THE PROCUREMENT OF 220KV & 500KV RELAY& CONTROL PANELS

ANNUNCIATOR UNIT-10

500kV CONTROL PANEL TYPE =B06+WC1

EPESOL Pvt. Ltd.
71-B Garden Block, New Garden Town, Lahore, Pakistan

DWG# EPE/ENU-18/B61570 | SHT: 29 OF 38
DATE: 07.03.2019 | AS BUILT | REV: 0

CONTROL PANEL AC SUPPLY FAIL	CONTROL ON SCADA	CONTROL PANEL DC SUPPLY FAIL

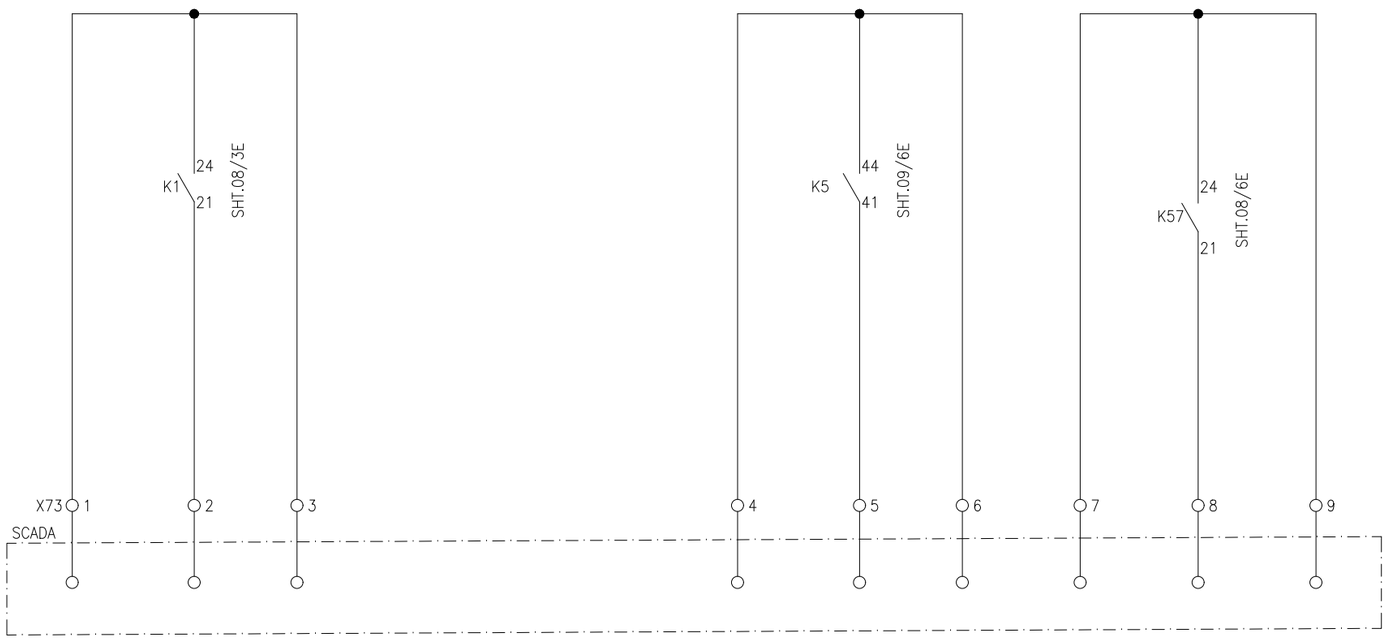

APPROVED	CHECKED	DRAWN
NAH	MSS	MUR

PROJECT: EDUCATIONAL ORDER NTDC PO# CE/MP&M /M(P)/AM-VI/EO/9417-29 DATED 14.11.2018 FOR THE PROCUREMENT OF 220KV & 500KV RELAY& CONTROL PANELS

SCADA SIGNAL

500kV CONTROL PANEL TYPE =B06+WC1

EPESOL Pvt. Ltd.
71-B Garden Block, New Garden Town, Lahore, Pakistan

DWG# EPE/ENU-18/B61570 | SHT: 30OF 38

DATE: 07.03.2019 | AS BUILT | REV: 0

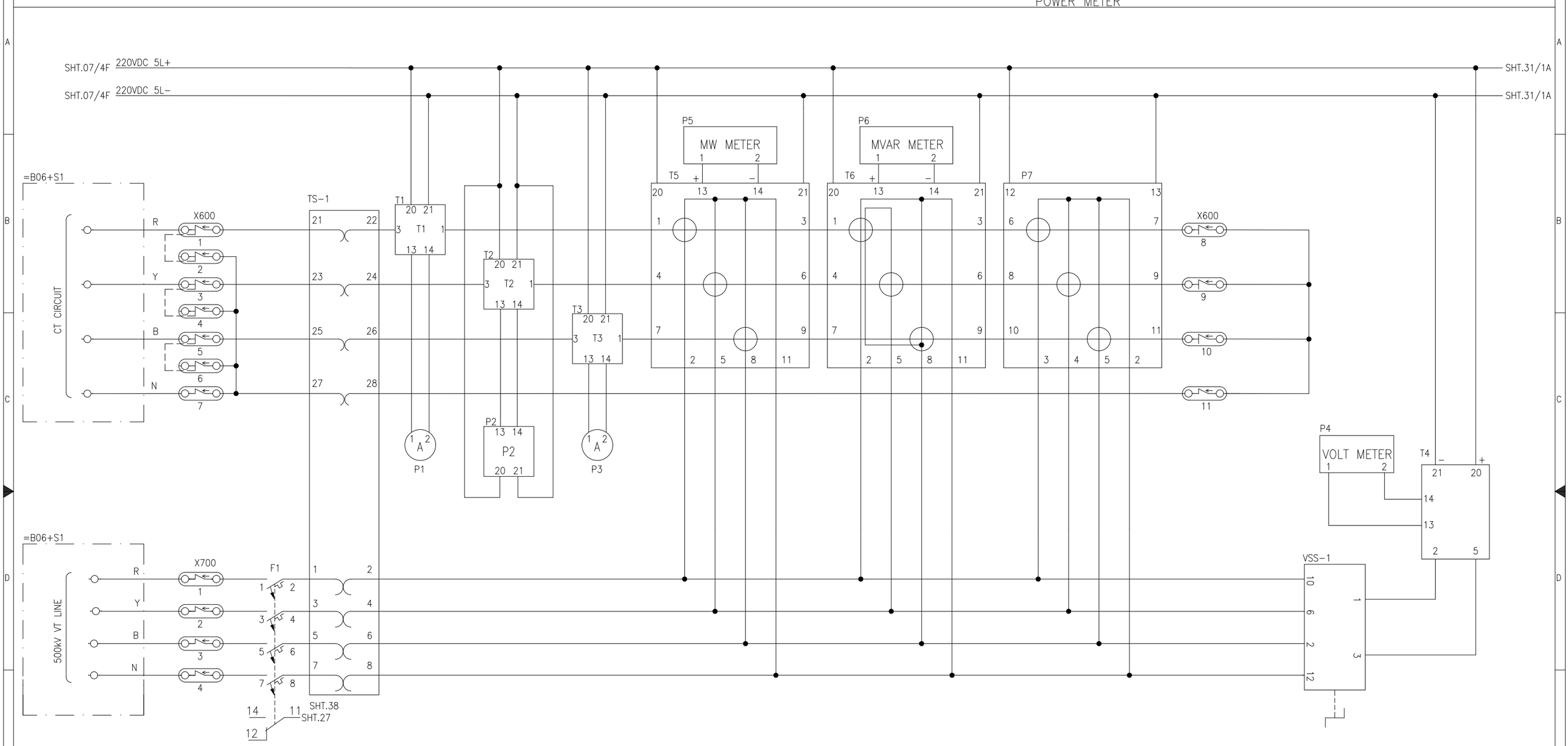

LEGEND

DES:	DESCRIPTION	TYPE	MAKE	DES:	DESCRIPTION	TYPE	MAKE	DES:	DESCRIPTION	TYPE	MAKE
TS−1	TEST BLOCK	TSB−14−2222111111AAAB	ARTECHE	P5+T5	MW METER/TRANSDUCER	MCOWT/A96MMA	FRER	P7	DIGITAL POWER METER	ENERIUM−150	ENERDIS
P1+T1, P3+T3	AMPERE METER/TRANSDUCER	MCOEAQ/A96MMA	FRER	P6+T6	MVAR METER/TRANSDUCER	MCORT/A96MMA	FRER	VSS−1	VOLT METER SELECTOR SWITCH	PO	GGT
P2, T2	AMPERE METER/TRANSDUCER	MCOEAQ/D96MMA	FRER	P4+T4	VOLT METER/TRANSDUCER	MCOEVQ/A96MMA	FRER				

APPROVED	CHECKED	DRAWN
NAH	MSS	MUR

PROJECT: EDUCATIONAL ORDER NTDC PO# CE/MP&M /M(P)/AM−VI/EO/9417−29 DATED 14.11.2018 FOR THE PROCUREMENT OF 220KV & 500KV RELAY& CONTROL PANELS

AC SCHEMATIC DIAGRAM

500kV CONTROL PANEL TYPE =B06+WC1

EPESOL Pvt. Ltd.
71-B Garden Block, New Garden Town, Lahore, Pakistan

DWG# EPE/ENU−18/B61570 | SHT: 31 OF 38

DATE: 07.03.2019 | AS BUILT | REV: 0

500/220kV AUTO-TRANSFORMER HV METERING

TEST BLOCK | AMMETER | VOLT METER

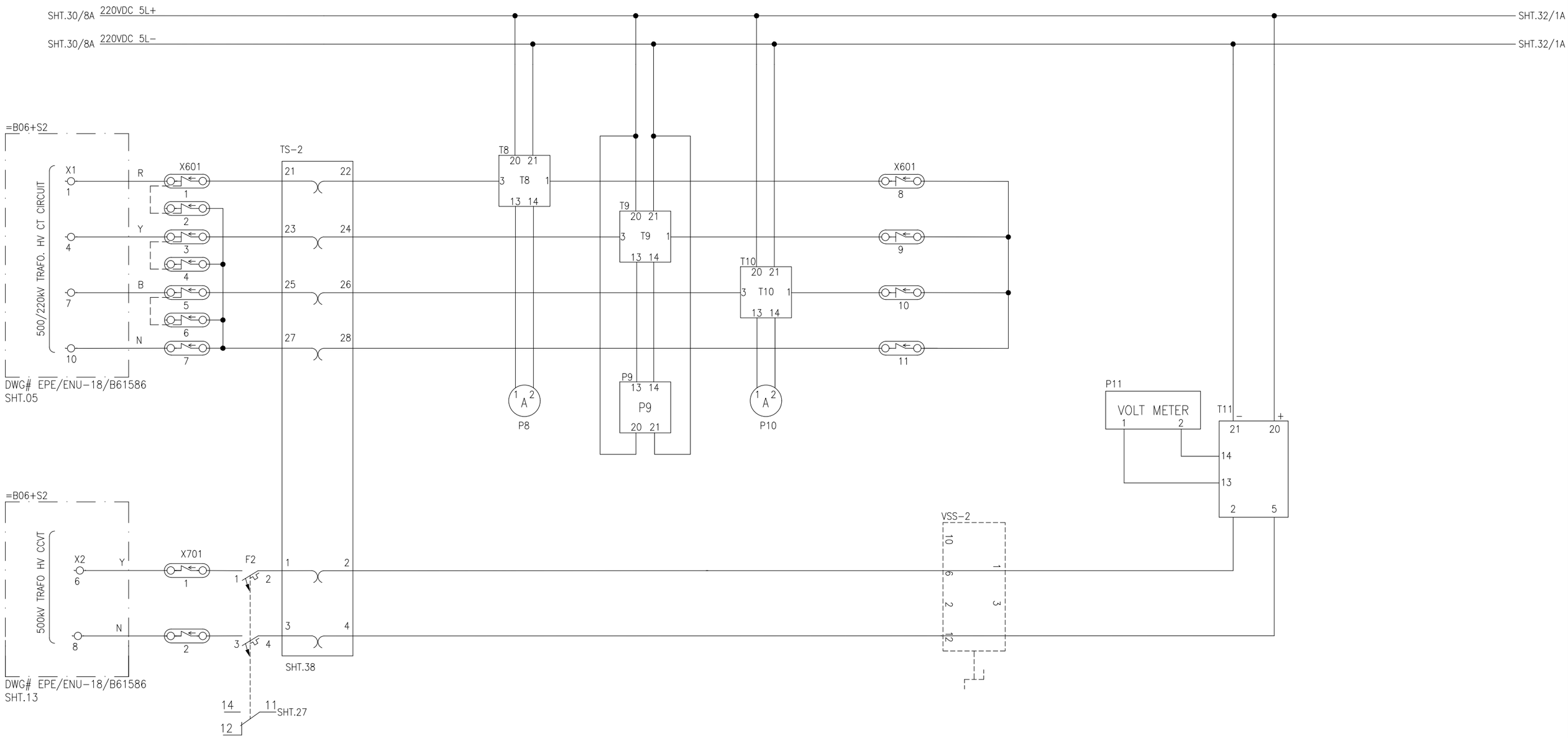

LEGEND

DES:	DESCRIPTION	TYPE	MAKE	DES:	DESCRIPTION	TYPE	MAKE	DES:	DESCRIPTION	TYPE	MAKE
TS-2	TEST BLOCK	TSB-14-2222111111AAAB	ARTECHE	P11+T11	VOLT METER/TRANSDUCER	MCOEVQ/A96MMA	FRER				
P8+T8,P10+T10	AMPERE METER/TRANSDUCER	MCOEAQ/A96MMA	FRER	VSS-2	VOLT METER SELECTOR SWITCH	PO	GGT				
P9, T9	AMPERE METER/TRANSDUCER	MCOEAQ/D96MMA	FRER	F2	2-POLE, 2A AC MCB	G60	GE				

APPROVED	CHECKED	DRAWN	PROJECT:	AC SCHEMATIC DIAGRAM		DWG# EPE/ENU-18/B61570	SHT: 32OF 38
NAH	MSS	MUR	EDUCATIONAL ORDER NTDC PO# CE/MP&M /M(P)/AM-VI/EO/9417-29 DATED 14.11.2018 FOR THE PROCUREMENT OF 220KV & 500KV RELAY& CONTROL PANELS	500kV CONTROL PANEL TYPE =B06+WC1	EPESOL Pvt. Ltd. 71-B Garden Block, New Garden Town, Lahore, Pakistan	DATE: 07.03.2019 AS BUILT	REV: 0

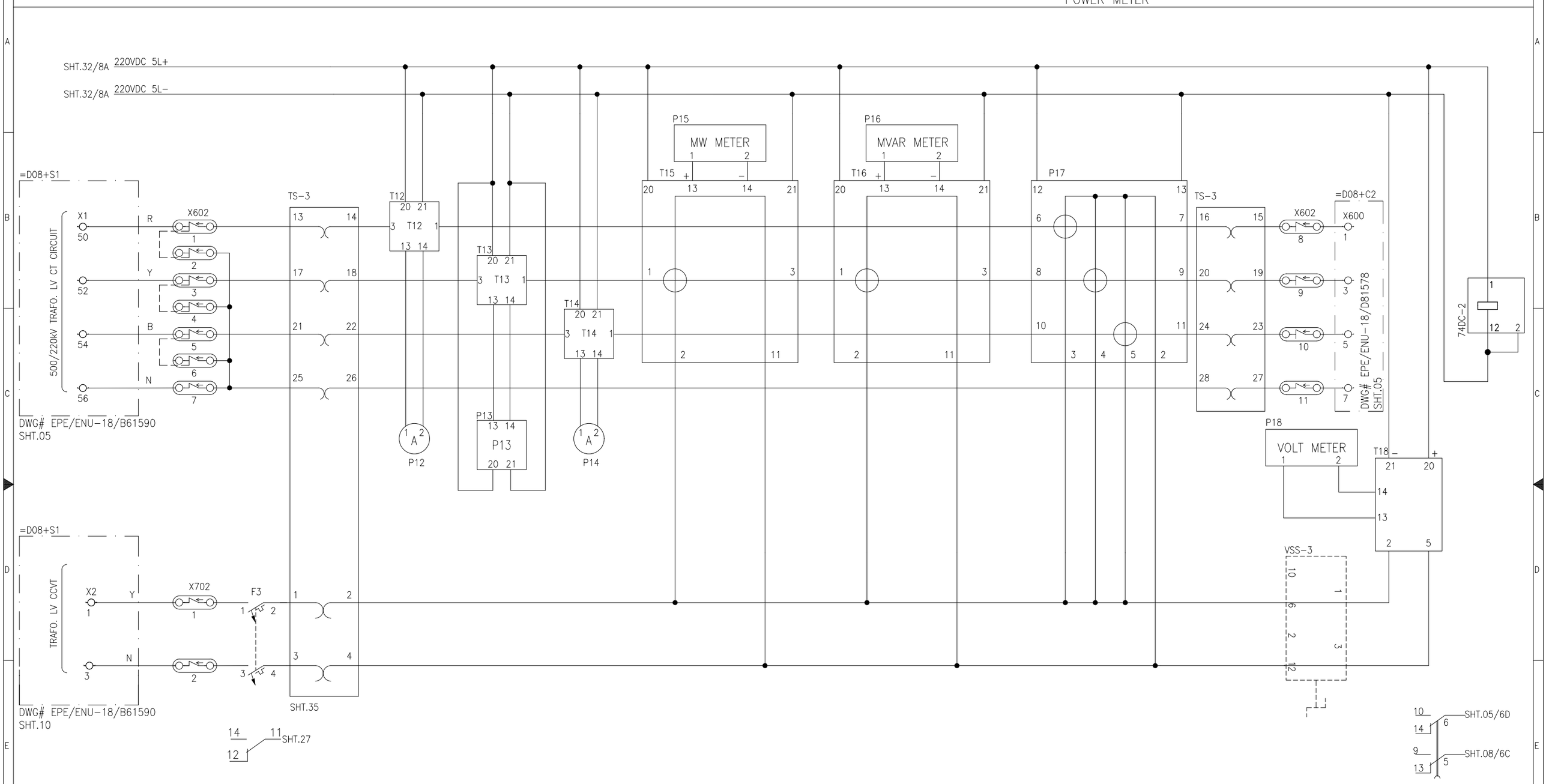

LEGEND

DES:	DESCRIPTION	TYPE	MAKE	DES:	DESCRIPTION	TYPE	MAKE	DES:	DESCRIPTION	TYPE	MAKE
TS−1	TEST BLOCK	TSB−14−111111ABABABAB	ARTECHE	P15+T15	MW METER/TRANSDUCER	MCOWN/A96MMA	FRER	P17	DIGITAL POWER METER	ENERIUM−150	ENERDIS
P12+T12,P14+T14	AMPERE METER/TRANSDUCER	MCOEAQ/A96MMA	FRER	P16+T16	MVAR METER/TRANSDUCER	MCORN/A96MMA	FRER	VSS−3	VOLT METER SELECTOR SWITCH	PO	GGT
P13, T13	AMPERE METER/TRANSDUCER	MCOEAQ/D96MMA	FRER	P18+T18	VOLT METER/TRANSDUCER	MCOEVQ/A96MMA	FRER	74DC−2	DC SUPPLY SUPERVISION RELAY, 220VDC	VDF10	ARTECHE

APPROVED	CHECKED	DRAWN
NAH	MSS	MUR

PROJECT: EDUCATIONAL ORDER NTDC PO# CE/MP&M /M(P)/AM−VI/EO/9417−29 DATED 14.11.2018 FOR THE PROCUREMENT OF 220KV & 500KV RELAY& CONTROL PANELS

AC SCHEMATIC DIAGRAM

500kV CONTROL PANEL TYPE =B06+WC1

EPESOL Pvt. Ltd.
71-B Garden Block, New Garden Town, Lahore, Pakistan

DWG# EPE/ENU−18/B61570 | SHT: 33OF 38
DATE: 07.03.2019 | AS BUILT | REV: 0

500kV VT SELECTION SCHEME

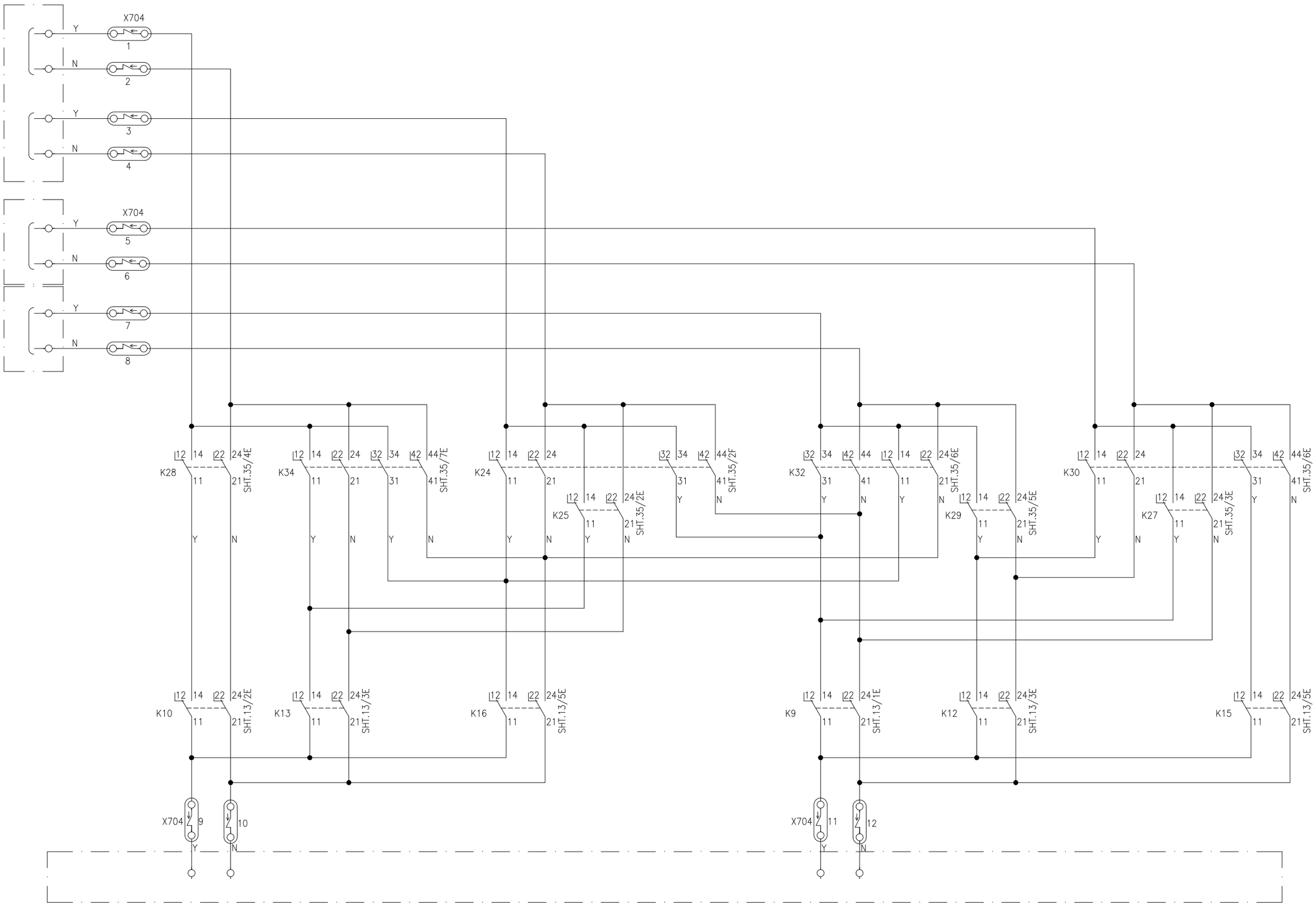

APPROVED	CHECKED	DRAWN	PROJECT:	VOLTAGE SELECTION FOR SYNCHROSCOPE	EPESOL Pvt. Ltd.	DWG# EPE/ENU-18/B61570	SHT: 34OF 38
NAH	MSS	MUR	EDUCATIONAL ORDER NTDC PO# CE/MP&M /M(P)/AM-VI/EO/9417-29 DATED 14.11.2018 FOR THE PROCUREMENT OF 220KV & 500KV RELAY& CONTROL PANELS	500kV CONTROL PANEL TYPE =B06+WC1	71-B Garden Block, New Garden Town, Lahore, Pakistan	DATE: 07.03.2019 AS BUILT	REV: 0

SYNCHRONIZING SELECTION

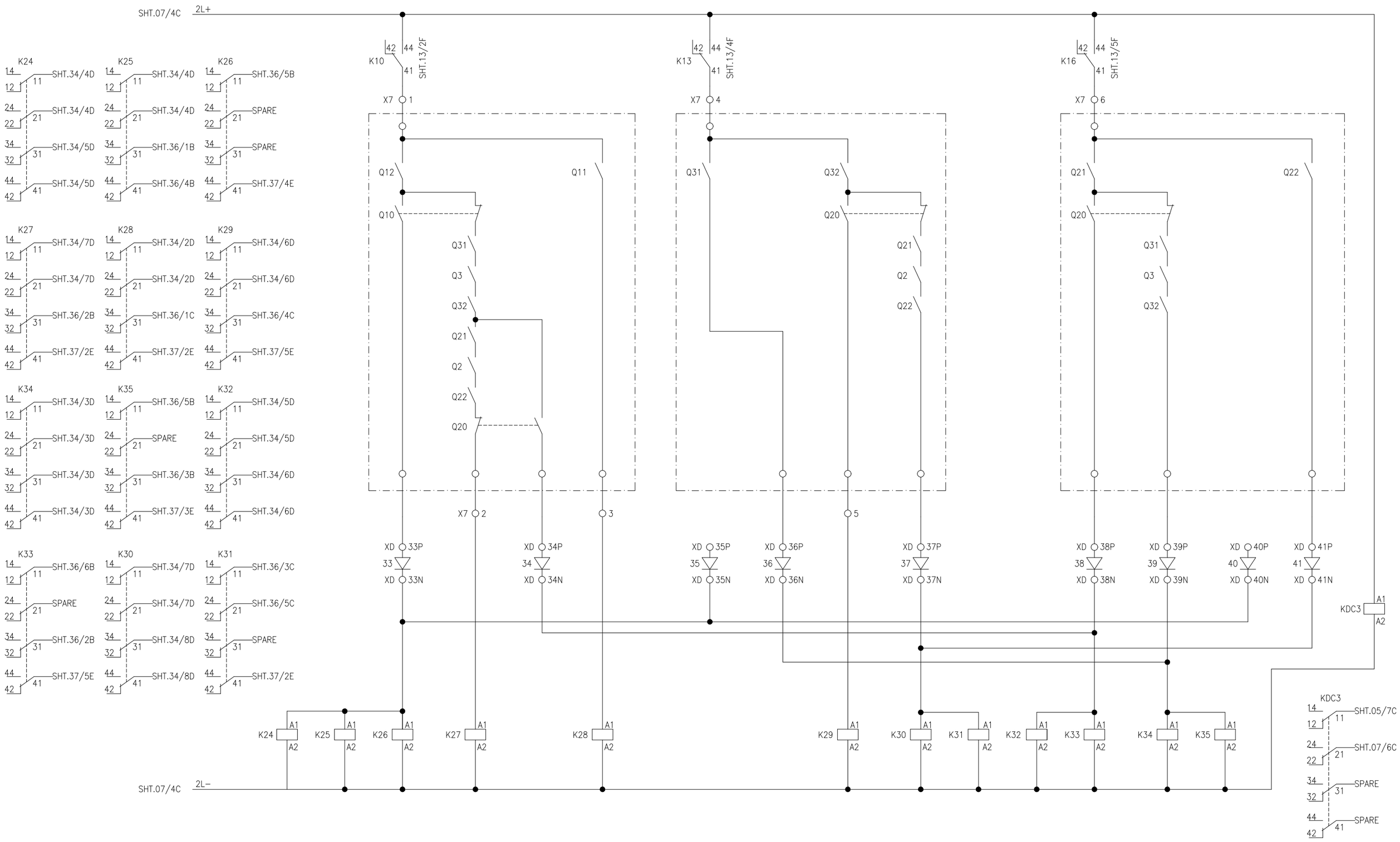

APPROVED	CHECKED	DRAWN	PROJECT: EDUCATIONAL ORDER NTDC PO# CE/MP&M /M(P)/AM-VI/EO/9417-29 DATED 14.11.2018 FOR THE PROCUREMENT OF 220KV & 500KV RELAY& CONTROL PANELS	SYNCHRONIZING SELECTION	EPESOL Pvt. Ltd.	DWG# EPE/ENU-18/B61570	SHT: 35OF 38
NAH	MSS	MUR		500kV CONTROL PANEL TYPE =B06+WC1	71-B Garden Block, New Garden Town, Lahore, Pakistan	DATE: 07.03.2019 AS BUILT	REV: 0

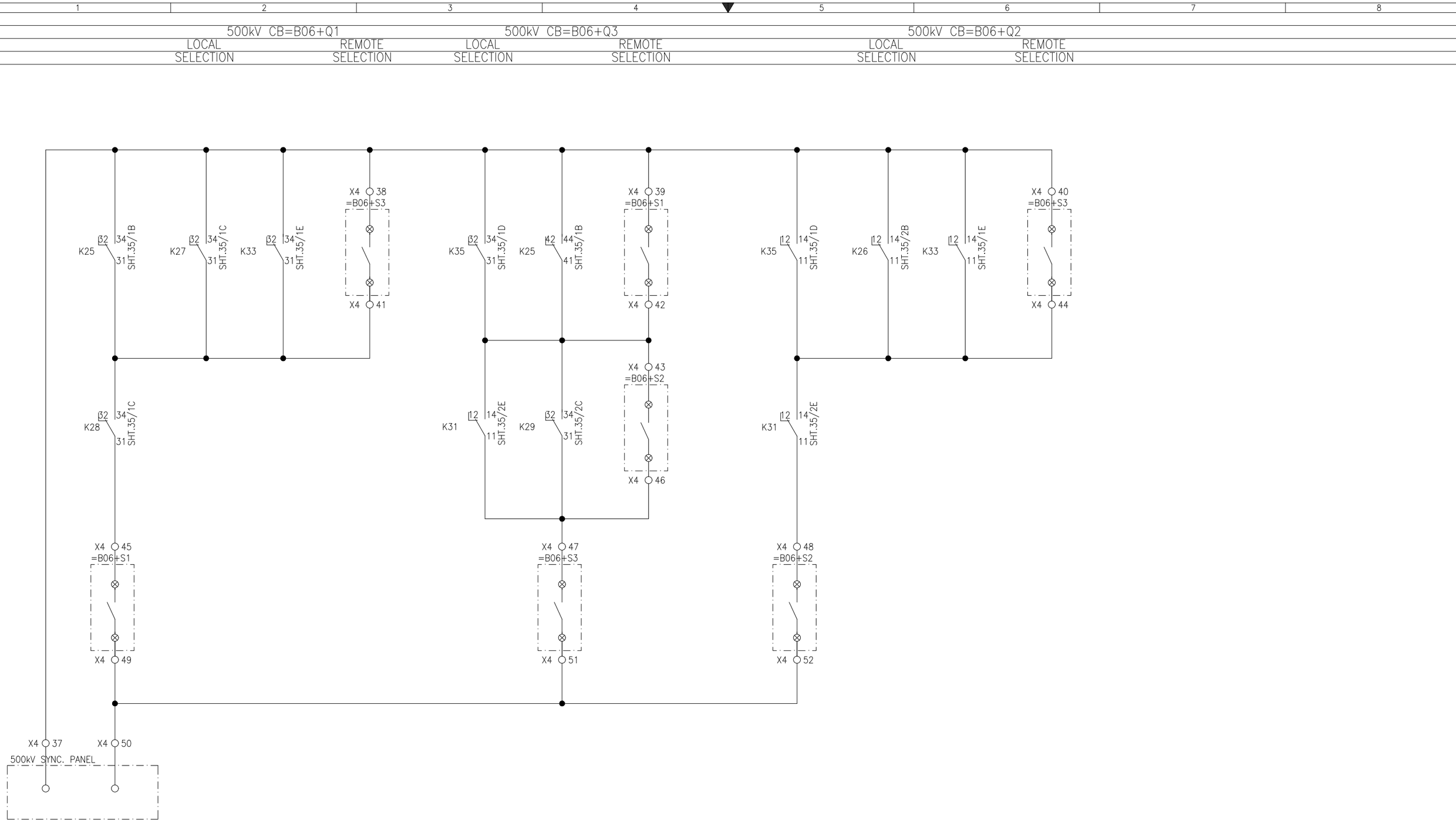

APPROVED	CHECKED	DRAWN
NAH	MSS	MUR

PROJECT: EDUCATIONAL ORDER NTDC PO# CE/MP&M /M(P)/AM-VI/EO/9417-29 DATED 14.11.2018 FOR THE PROCUREMENT OF 220KV & 500KV RELAY& CONTROL PANELS

SYNC. RELAY INPUT

500kV CONTROL PANEL TYPE =B06+WC1

EPESOL Pvt. Ltd.
71-B Garden Block, New Garden Town, Lahore, Pakistan

DWG# EPE/ENU-18/B61570 | SHT: 36OF 38

DATE: 07.03.2019 | AS BUILT | REV: 0

500kV CB

=B06+Q1	=B06+Q3	=B06+Q2
SELECTION	SELECTION	SELECTION

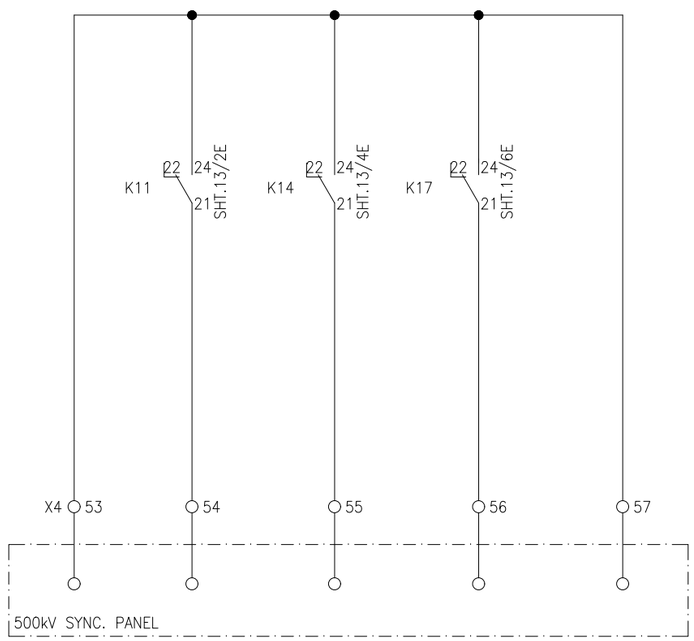

500kV
SELECTED BUS VT MCB TRIP

500kV
SELECTED LINE VT MCB TRIP

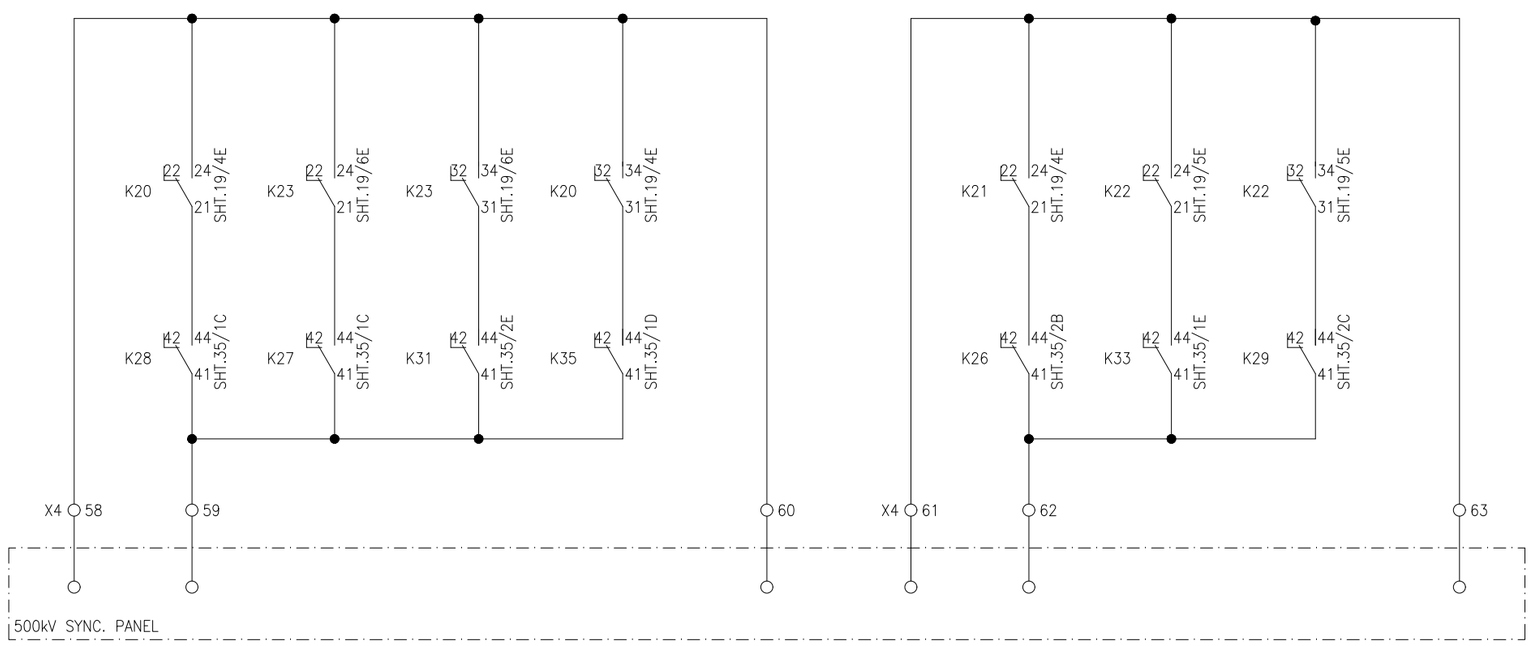

APPROVED	CHECKED	DRAWN	PROJECT:	SYNCHRONIZING SIGNALS	EPESOL Pvt. Ltd.	DWG# EPE/ENU-18/B61570	SHT: 37OF 38
NAH	MSS	MUR	EDUCATIONAL ORDER NTDC PO# CE/MP&M /M(P)/AM-VI/EO/9417-29 DATED 14.11.2018 FOR THE PROCUREMENT OF 220KV & 500KV RELAY& CONTROL PANELS	500kV CONTROL PANEL TYPE =B06+WC1	71-B Garden Block, New Garden Town, Lahore, Pakistan	DATE: 07.03.2019 AS BUILT	REV: 0

TS-1

TEST BLOCK TYPE TSB-14-2222111111AAAB-V

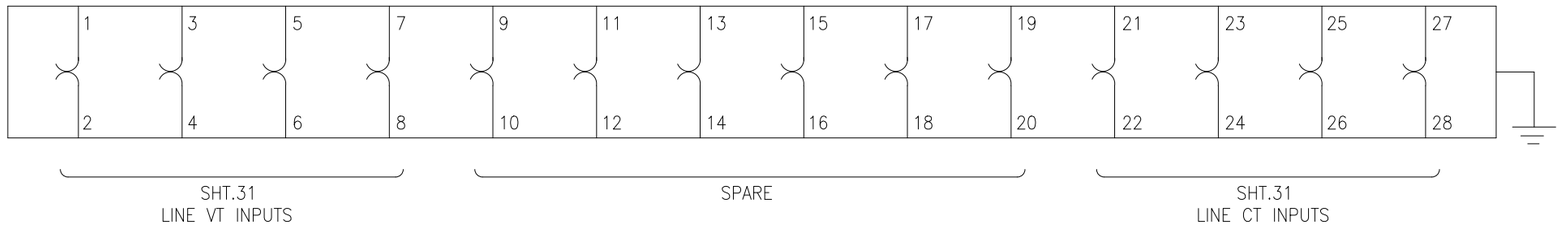

TS-2

TEST BLOCK TYPE TSB-14-2222111111AAAB-V

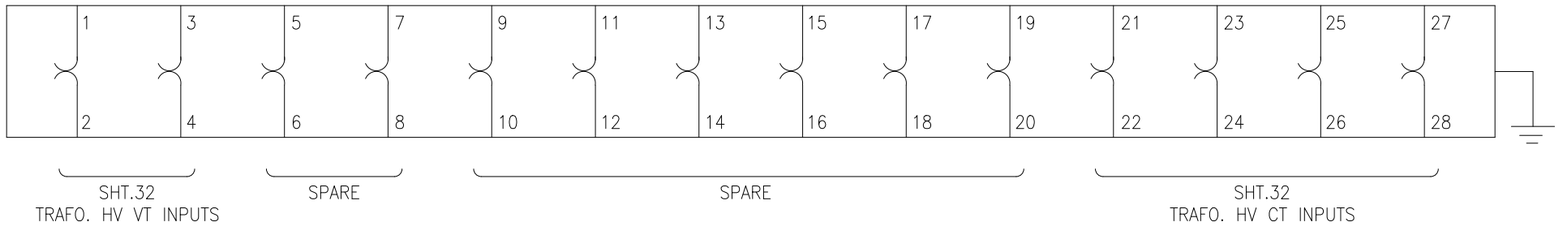

TS-3

TEST BLOCK TYPE TSB-14-111111ABABABAB-V

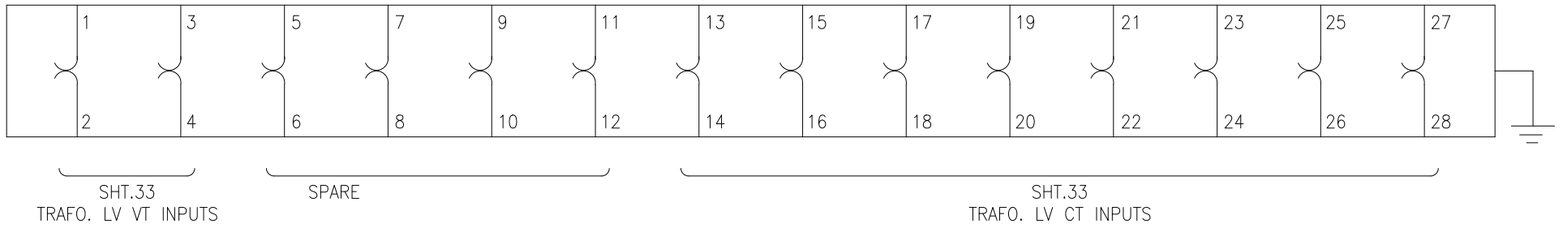

APPROVED	CHECKED	DRAWN	PROJECT:	TEST BLOCK DETAILS	EPESOL Pvt. Ltd.	DWG# EPE/ENU-18/B61570	SHT: 38OF 38
NAH	MSS	MUR	EDUCATIONAL ORDER NTDC PO# CE/MP&M /M(P)/AM-VI/EO/9417-29 DATED 14.11.2018 FOR THE PROCUREMENT OF 220KV & 500KV RELAY& CONTROL PANELS	500kV CONTROL PANEL TYPE =B06+WC1	71-B Garden Block, New Garden Town, Lahore, Pakistan	DATE: 07.03.2019 AS BUILT	REV: 0

SCHEME DWG. REF: EPE/ENU-18/B61570

Sr.	CABLE DESIGNATION	CORE CROSS SECTION	DESTINATION
1			
2			
3			
4			
5			
6			
7			
8			
9			
10			
11			
12			

LEGEND:

TEMPORARY SHORTENING LINK

PERMANENT LINK

D- END COVER

1	2	3	4	5	6	7	8	9	10	11	12	REMOTE DESTINATION	TERMINAL BLOCK	TERMINAL NO

	TERMINAL STRIP X600									TERMINATION B	
	LINK				REFERENCE			TERMINAL NO		ITEM DESIGNATION	TERMINAL NO
					SHT	/	REF				
	•				31	/	1B	1		TS-1	21
	•	•			31	/	1B	2			
	•				31	/	1B	3		TS-1	23
	•	•			31	/	1B	4			
	•				31	/	1C	5		TS-1	25
	•	•			31	/	1C	6			
		•			31	/	1C	7		TS-1	27
		•			31	/	7B	8		P7	7
		•			31	/	7B	9		P7	9
		•			31	/	7C	10		P7	11
		•			31	/	7C	11		TS-1	28
D-								12			

APPROVED	CHECKED	DRAWN
NAH	MSS	MUR

PROJECT: NTDC PO# CE/MP&M/M(P)/AM-VI/EO/ 9417-29 DATED 14.11.2018 FOR PROCUREMENT OF 220KV & 500KV PROTECTION & CONTROL PANELS

TITLE: TERMINAL DETAIL
500kV CONTROL PANEL TYPE =B06+WC1

EPESOL Pvt. Ltd.
71-B Garden Block, New Garden Town, Lahore, Pakistan

DWG# EPE/ENU-18/B61571 | SHT: 01 OF 30
DATE: 07.03.2019 | AS BUILT | REV: 0

SCHEME DWG. REF: EPE/ENU-18/B61570

Sr.	CABLE DESIGNATION	CORE CROSS SECTION	DESTINATION
1			
2			
3			
4			
5			
6			
7			
8			
9			
10			
11			
12			

LEGEND:

- TEMPORARY SHORTENING LINK
- PERMANENT LINK
- D- END COVER

1	2	3	4	5	6	7	8	9	10	11	12	REMOTE DESTINATION	TERMINAL BLOCK	TERMINAL NO

TERMINAL STRIP X601

	LINK 1	LINK 2	LINK 3	LINK 4	REFERENCE SHT	/	REF	TERMINAL NO	TERMINATION B ITEM DESIGNATION	TERMINATION B TERMINAL NO
	•				33	/	1B	1	TS-2	21
	•	•			33	/	1B	2		
	•				33	/	1B	3	TS-2	23
	•	•			33	/	1B	4		
	•				33	/	1C	5	TS-2	25
	•	•			33	/	1C	6		
		•			33	/	1C	7	TS-2	27
		•			33	/	7B	8	T8	1
		•			33	/	7B	9	T9	1
		•			33	/	7C	10	T10	1
		•			33	/	7C	11	TS-2	28
D-								12		

APPROVED	CHECKED	DRAWN
NAH	MSS	MUR

PROJECT: NTDC PO# CE/MP&M/M(P)/AM-VI/EO/9417-29 DATED 14.11.2018 FOR PROCUREMENT OF 220KV & 500KV PROTECTION & CONTROL PANELS

TITLE: TERMINAL DETAIL
500kV CONTROL PANEL TYPE =B06+WC1

EPESOL Pvt. Ltd.
71-B Garden Block, New Garden Town, Lahore, Pakistan

DWG# EPE/ENU-18/B61571 | SHT: 02 OF 30
DATE: 07.03.2019 | AS BUILT | REV: 0

SCHEME DWG. REF: EPE/ENU-18/B61570

Sr.	CABLE DESIGNATION	CORE CROSS SECTION	DESTINATION
1			
2			
3			
4			
5			
6			
7			
8			
9			
10			
11			
12			

LEGEND:

TEMPORARY SHORTENING LINK

PERMANENT LINK

D- END COVER

1	2	3	4	5	6	7	8	9	10	11	12	REMOTE DESTINATION	TERMINAL BLOCK	TERMINAL NO

	TERMINAL STRIP X602									TERMINATION B	
	LINK				REFERENCE			TERMINAL NO		ITEM DESIGNATION	TERMINAL NO
					SHT	/	REF				
	•				33	/	1B	1		TS-3	13
	•	•			33	/	1B	2			
	•				33	/	1B	3		TS-3	17
	•	•			33	/	1B	4			
	•				33	/	1C	5		TS-3	21
	•	•			33	/	1C	6			
		•			33	/	1C	7		TS-3	25
					33	/	7B	8		TS-3	16
					33	/	7B	9		TS-3	20
					33	/	7C	10		TS-3	24
					33	/	7C	11		TS-3	28
D-								12			

APPROVED	CHECKED	DRAWN
NAH	MSS	MUR

PROJECT: NTDC PO# CE/MP&M/M(P)/AM-VI/EO/ 9417-29 DATED 14.11.2018 FOR PROCUREMENT OF 220KV & 500KV PROTECTION & CONTROL PANELS

TITLE: TERMINAL DETAIL
500kV CONTROL PANEL TYPE =B06+WC1

EPESOL Pvt. Ltd.
71-B Garden Block, New Garden Town, Lahore, Pakistan

DWG# EPE/ENU-18/B61571 | SHT: 03 OF 30
DATE: 07.03.2019 | AS BUILT | REV: 0

SCHEME DWG. REF: EPE/ENU-18/B61570

Sr.	CABLE DESIGNATION	CORE CROSS SECTION	DESTINATION
1			
2			
3			
4			
5			
6			
7			
8			
9			
10			
11			
12			

1	2	3	4	5	6	7	8	9	10	11	12

LEGEND:

TEMPORARY SHORTENING LINK

PERMANENT LINK

D- END COVER

REMOTE DESTINATION	TERMINAL BLOCK	TERMINAL NO

	TERMINAL STRIP X700							
	LINK				REFERENCE			TERMINAL NO
					SHT	/	REF	
					31	/	1D	1
					31	/	1D	2
					31	/	1D	3
					31	/	1D	4
D-								5

TERMINATION B	
ITEM DESIGNATION	TERMINAL NO
F1	1
F1	3
F1	5
F1	7

APPROVED	CHECKED	DRAWN
NAH	MSS	MUR

PROJECT: NTDC PO# CE/MP&M/M(P)/AM-VI/EO/9417-29 DATED 14.11.2018 FOR PROCUREMENT OF 220KV & 500KV PROTECTION & CONTROL PANELS

TITLE: TERMINAL DETAIL
500kV CONTROL PANEL TYPE =B06+WC1

EPESOL Pvt. Ltd.
71-B Garden Block, New Garden Town, Lahore, Pakistan

DWG# EPE/ENU-18/B61571 | SHT: 04 OF 30
DATE: 07.03.2019 | AS BUILT | REV: 0

SCHEME DWG. REF: EPE/ENU-18/B61570

Sr.	CABLE DESIGNATION	CORE CROSS SECTION	DESTINATION
1			
2			
3			
4			
5			
6			
7			
8			
9			
10			
11			
12			

1	2	3	4	5	6	7	8	9	10	11	12	REMOTE DESTINATION	TERMINAL BLOCK	TERMINAL NO

SCHEME DWG. REF: EPE/ENU-18/B61570

Sr.	CABLE DESIGNATION	CORE CROSS SECTION	DESTINATION
1			
2			
3			
4			
5			
6			
7			
8			
9			
10			
11			
12			

LEGEND:

TEMPORARY SHORTENING LINK

PERMANENT LINK

D- END COVER

1	2	3	4	5	6	7	8	9	10	11	12	REMOTE DESTINATION	TERMINAL BLOCK	TERMINAL NO

	TERMINAL STRIP X704								TERMINATION B	
	LINK				REFERENCE			TERMINAL NO	ITEM DESIGNATION	TERMINAL NO
					SHT	/	REF			
					34	/	2A	1	K28	14
					34	/	2A	2	K28	24
					34	/	2A	3	K24	14
					34	/	2B	4	K24	24
					34	/	2B	5	K30	14
					34	/	2B	6	K30	24
					34	/	2C	7	K32	34
					34	/	2C	8	K32	44
					34	/	2F	9	K10	11
					34	/	2F	10	K10	21
					34	/	5F	11	K9	11
					34	/	5F	12	K9	21
D-								13		

APPROVED	CHECKED	DRAWN
NAH	MSS	MUR

PROJECT: NTDC PO# CE/MP&M/M(P)/AM-VI/EO/ 9417-29 DATED 14.11.2018 FOR PROCUREMENT OF 220KV & 500KV PROTECTION & CONTROL PANELS

TITLE: TERMINAL DETAIL
500kV CONTROL PANEL TYPE =B06+WC1

EPESOL Pvt. Ltd.
71-B Garden Block, New Garden Town, Lahore, Pakistan

DWG# EPE/ENU-18/B61571 | SHT: 07 OF 30
DATE: 07.03.2019 | AS BUILT | REV: 0

SCHEME DWG. REF: EPE/ENU-18/B61570

Sr.	CABLE DESIGNATION	CORE CROSS SECTION	DESTINATION
1			
2			
3			
4			
5			
6			
7			
8			
9			
10			
11			
12			

1	2	3	4	5	6	7	8	9	10	11	12	REMOTE DESTINATION	TERMINAL BLOCK	TERMINAL NO

LEGEND:

TEMPORARY SHORTENING LINK

PERMANENT LINK

D- END COVER

| | TERMINAL STRIP X100 | | | | | | | | | | | | | |

SCHEME DWG. REF: EPE/ENU-18/B61570

Sr.	CABLE DESIGNATION	CORE CROSS SECTION	DESTINATION
1			
2			
3			
4			
5			
6			
7			
8			
9			
10			
11			
12			

1	2	3	4	5	6	7	8	9	10	11	12	REMOTE DESTINATION	TERMINAL BLOCK	TERMINAL NO

LEGEND:

TEMPORARY SHORTENING LINK

PERMANENT LINK

D- END COVER

	TERMINAL STRIP X200									
	LINK				REFERENCE			TERMINAL NO	TERMINATION B	
					SHT	/	REF		ITEM DESIGNATION	TERMINAL NO
	●				06	/	1B	1	TLS	1
	●				06	/	8B	2		
	●				06	/	1B	3	TLS	2
D-	●				06	/	8B	4		

APPROVED	CHECKED	DRAWN
NAH	MSS	MUR

PROJECT: NTDC PO# CE/MP&M/M(P)/AM-VI/EO/ 9417-29 DATED 14.11.2018 FOR PROCUREMENT OF 220KV & 500KV PROTECTION & CONTROL PANELS

TITLE: TERMINAL DETAIL
500kV CONTROL PANEL TYPE =B06+WC1

EPESOL Pvt. Ltd.
71-B Garden Block, New Garden Town, Lahore, Pakistan

DWG# EPE/ENU-18/B61571 | SHT: 09 OF 30
DATE: 07.03.2019 | AS BUILT | REV: 0

SCHEME DWG. REF: EPE/ENU-18/B61570

Sr.	CABLE DESIGNATION	CORE CROSS SECTION	DESTINATION
1			
2			
3			
4			
5			
6			
7			
8			
9			
10			
11			
12			

LEGEND:

TEMPORARY SHORTENING LINK

PERMANENT LINK

D- END COVER

1	2	3	4	5	6	7	8	9	10	11	12	REMOTE DESTINATION	TERMINAL BLOCK	TERMINAL NO

	TERMINAL STRIP X110									TERMINATION B	
	LINK				REFERENCE			TERMINAL NO		ITEM DESIGNATION	TERMINAL NO
					SHT	/	REF				
	●				07	/	1A	1		F110	2
	●				07	/	8A	2			
	●				07	/	1B	3		F110	4
	●				07	/	8B	4			
					07	/	1C	5		F110	1
					07	/	2C	6		F110	3
D-								7			

APPROVED	CHECKED	DRAWN
NAH	MSS	MUR

PROJECT: NTDC PO# CE/MP&M/M(P)/AM-VI/EO/ 9417-29 DATED 14.11.2018 FOR PROCUREMENT OF 220KV & 500KV PROTECTION & CONTROL PANELS

TITLE: TERMINAL DETAIL
500kV CONTROL PANEL TYPE =B06+WC1

EPESOL Pvt. Ltd.
71-B Garden Block, New Garden Town, Lahore, Pakistan

DWG# EPE/ENU-18/B61571 | SHT: 10 OF 30
DATE: 07.03.2019 | AS BUILT | REV: 0

SCHEME DWG. REF: EPE/ENU-18/B61570

Sr.	CABLE DESIGNATION	CORE CROSS SECTION	DESTINATION
1			
2			
3			
4			
5			
6			
7			
8			
9			
10			
11			
12			

1	2	3	4	5	6	7	8	9	10	11	12	REMOTE DESTINATION	TERMINAL BLOCK	TERMINAL NO

LEGEND:

TEMPORARY SHORTENING LINK

PERMANENT LINK

D- END COVER

	TERMINAL STRIP X120							
	LINK				REFERENCE			TERMINAL NO
					SHT	/	REF	
	●				07	/	1D	1
	●				07	/	8D	2
	●				07	/	1D	3
	●				07	/	8D	4
D-								5

TERMINATION B	
ITEM DESIGNATION	TERMINAL NO
F211	2
F212	2

APPROVED	CHECKED	DRAWN
NAH	MSS	MUR

PROJECT:
NTDC PO# CE/MP&M/M(P)/AM-VI/EO/ 9417-29 DATED 14.11.2018 FOR PROCUREMENT OF 220KV & 500KV PROTECTION & CONTROL PANELS

TITLE:
TERMINAL DETAIL
500kV CONTROL PANEL TYPE =B06+WC1

EPESOL Pvt. Ltd.
71-B Garden Block, New Garden Town, Lahore, Pakistan

DWG# EPE/ENU-18/B61571 | SHT: 11 OF 30
DATE: 07.03.2019 | AS BUILT | REV: 0

SCHEME DWG. REF: EPE/ENU-18/B61570

Sr.	CABLE DESIGNATION	CORE CROSS SECTION	DESTINATION
1			
2			
3			
4			
5			
6			
7			
8			
9			
10			
11			
12			

1	2	3	4	5	6	7	8	9	10	11	12

LEGEND:

TEMPORARY SHORTENING LINK

PERMANENT LINK

D- END COVER

REMOTE DESTINATION	TERMINAL BLOCK	TERMINAL NO

	TERMINAL STRIP X1						
	LINK				REFERENCE			TERMINAL NO
					SHT	/	REF	
					09	/	3B	1
					09	/	4B	2
					09	/	4B	3
					09	/	5B	4
					09	/	5B	5
					09	/	6B	6
					09	/	6B	7
					09	/	7B	8
					09	/	3B	9
					09	/	4B	10
					10	/	4B	11
					10	/	5B	12
					10	/	5B	13
					10	/	6B	14
					10	/	6B	15
					10	/	7B	16
					10	/	7B	17
					10	/	8B	18
					11	/	3B	19
					11	/	4B	20
					11	/	4B	21
					11	/	5B	22
					11	/	5B	23
					11	/	6B	24
					12	/	3B	25
					12	/	4B	26
					12	/	4B	27
					12	/	5B	28
								29
								30
D-								31

TERMINATION B	
ITEM DESIGNATION	TERMINAL NO
B6S01	4
B6S01	2
B6S11	4
B6S11	2
B6S12	4
B6S12	2
B6S10	4
B6S10	2
B6ES10	4
B6ES10	2
B6S02	4
B6S02	2
B6S21	4
B6S21	2
B6S22	4
B6S22	2
B6S20	4
B6S20	2
B6S03	4
B6S03	2
B6S31	4
B6S31	2
B6S32	4
B6S32	2
B6S4R	4
B6S4R	2
B6S41	4
B6S41	2

APPROVED	CHECKED	DRAWN
NAH	MSS	MUR

PROJECT: NTDC PO# CE/MP&M/M(P)/AM-VI/EO/9417-29 DATED 14.11.2018 FOR PROCUREMENT OF 220KV & 500KV PROTECTION & CONTROL PANELS

TITLE: TERMINAL DETAIL
500kV CONTROL PANEL TYPE =B06+WC1

EPESOL Pvt. Ltd.
71-B Garden Block, New Garden Town, Lahore, Pakistan

DWG# EPE/ENU-18/B61571 | SHT: 12 OF 30
DATE: 07.03.2019 | AS BUILT | REV: 0

SCHEME DWG. REF: EPE/ENU-18/B61570

Sr.	CABLE DESIGNATION	CORE CROSS SECTION	DESTINATION
1			
2			
3			
4			
5			
6			
7			
8			
9			
10			
11			
12			

1	2	3	4	5	6	7	8	9	10	11	12	REMOTE DESTINATION	TERMINAL BLOCK	TERMINAL NO

LEGEND:

TEMPORARY SHORTENING LINK

PERMANENT LINK

D- END COVER

| TERMINAL STRIP X3 | | | | | | | | | | | | | |

SCHEME DWG. REF: EPE/ENU-18/B61570

Sr.	CABLE DESIGNATION	CORE CROSS SECTION	DESTINATION
1			
2			
3			
4			
5			
6			
7			
8			
9			
10			
11			
12			

LEGEND:

TEMPORARY SHORTENING LINK

PERMANENT LINK

D- END COVER

1	2	3	4	5	6	7	8	9	10	11	12	REMOTE DESTINATION	TERMINAL BLOCK	TERMINAL NO

	TERMINAL STRIP X71								TERMINATION B	
	LINK				REFERENCE			TERMINAL NO	ITEM DESIGNATION	TERMINAL NO
					SHT	/	REF			
					09	/	1A	1	S100	1
					09	/	2A	2	K6	A1
					09	/	3A	3	B6S01	4
					09	/	4A	4	B6S01	2
					09	/	5A	5	B6S11	4
					09	/	5A	6	B6S11	2
					09	/	6A	7	B6S12	4
					09	/	6A	8	B6S12	2
					09	/	7A	9	B6S10	4
					09	/	7A	10	B6S10	2
					09	/	7A	11	B6ES10	4
					09	/	8A	12	B6ES10	2
					10	/	5A	13	B6S02	4
					10	/	5A	14	B6S02	2
					10	/	6A	15	B6S21	4
					10	/	6A	16	B6S21	2
					10	/	7A	17	B6S22	4
					10	/	7A	18	B6S22	2
					11	/	8A	19	B6S20	4
					11	/	8A	20	B6S20	2
					11	/	3A	21	B6S03	4
					11	/	4A	22	B6S03	2
					11	/	5A	23	B6S31	4
					11	/	5A	24	B6S31	2
					11	/	6A	25	B6S32	4
					11	/	6A	26	B6S32	2
					12	/	3A	27	B6S4R	4
					12	/	4A	28	B6S4R	2
					12	/	5A	29	B6S41	4
					12	/	5A	30	B6S41	2
					12	/	6A	31	S100	5a
								32		
								33		
D-								34		

APPROVED	CHECKED	DRAWN
NAH	MSS	MUR

PROJECT: NTDC PO# CE/MP&M/M(P)/AM-VI/EO/9417-29 DATED 14.11.2018 FOR PROCUREMENT OF 220KV & 500KV PROTECTION & CONTROL PANELS

TITLE: TERMINAL DETAIL
500kV CONTROL PANEL TYPE =B06+WC1

EPESOL Pvt. Ltd.
71-B Garden Block, New Garden Town, Lahore, Pakistan

DWG# EPE/ENU-18/B61571 | SHT: 14 OF 30
DATE: 07.03.2019 | AS BUILT | REV: 0

SCHEME DWG. REF: EPE/ENU-18/B61570

Sr.	CABLE DESIGNATION	CORE CROSS SECTION	DESTINATION
1			
2			
3			
4			
5			
6			
7			
8			
9			
10			
11			
12			

LEGEND:

TEMPORARY SHORTENING LINK

PERMANENT LINK

D- END COVER

1	2	3	4	5	6	7	8	9	10	11	12	REMOTE DESTINATION	TERMINAL BLOCK	TERMINAL NO

TERMINAL STRIP X72								TERMINATION B	
LINK				REFERENCE			TERMINAL NO	ITEM DESIGNATION	TERMINAL NO
				SHT	/	REF			
				09	/	1D	1	S100	4a
				09	/	2D	2	K6	A2
				09	/	3D	3	B6S01	7
				09	/	4D	4	B6S01	5
				09	/	5D	5	B6S11	7
				09	/	5D	6	B6S11	5
				09	/	6D	7	B6S12	7
				09	/	6D	8	B6S12	5
				09	/	7D	9	B6S10	7
				09	/	7D	10	B6S10	5
				09	/	7D	11	B6ES10	7
				09	/	8D	12	B6ES10	5
				10	/	5D	13	B6S02	7
				10	/	5D	14	B6S02	5
				10	/	6D	15	B6S21	7
				10	/	6D	16	B6S21	5
				10	/	7D	17	B6S22	7
				10	/	7D	18	B6S22	5
				11	/	8D	19	B6S20	7
				11	/	8D	20	B6S20	5
				11	/	3D	21	B6S03	7
				11	/	4D	22	B6S03	5
				11	/	5D	23	B6S31	7
				11	/	5D	24	B6S31	5
				11	/	6D	25	B6S32	7
				11	/	6D	26	B6S32	5
				12	/	3D	27	B6S4R	7
				12	/	4D	28	B6S4R	5
				12	/	5D	29	B6S41	7
				12	/	5D	30	B6S41	5
				12	/	6D	31	S100	8a
							32		
							33		
							34		

D-

APPROVED	CHECKED	DRAWN
NAH	MSS	MUR

PROJECT: NTDC PO# CE/MP&M/M(P)/AM-VI/EO/ 9417-29 DATED 14.11.2018 FOR PROCUREMENT OF 220KV & 500KV PROTECTION & CONTROL PANELS

TITLE: TERMINAL DETAIL
500kV CONTROL PANEL TYPE =B06+WC1

EPESOL Pvt. Ltd.
71-B Garden Block, New Garden Town, Lahore, Pakistan

DWG# EPE/ENU-18/B61571 | SHT: 15 OF 30
DATE: 07.03.2019 | AS BUILT | REV: 0

SCHEME DWG. REF: EPE/ENU-18/B61570

Sr.	CABLE DESIGNATION	CORE CROSS SECTION	DESTINATION
1			
2			
3			
4			
5			
6			
7			
8			
9			
10			
11			
12			

1	2	3	4	5	6	7	8	9	10	11	12

LEGEND:

TEMPORARY SHORTENING LINK

PERMANENT LINK

D- END COVER

REMOTE DESTINATION	TERMINAL BLOCK	TERMINAL NO

	TERMINAL STRIP X8							
	LINK				REFERENCE			TERMINAL NO
					SHT	/	REF	
					13	/	2D	1
					13	/	2D	2
					13	/	6D	3
					13	/	7D	4
D-								5

TERMINATION B	
ITEM DESIGNATION	TERMINAL NO
K9	31
K3	11
K15	41
K5	34

APPROVED	CHECKED	DRAWN
NAH	MSS	MUR

PROJECT: NTDC PO# CE/MP&M/M(P)/AM-VI/EO/ 9417-29 DATED 14.11.2018 FOR PROCUREMENT OF 220KV & 500KV PROTECTION & CONTROL PANELS

TITLE: TERMINAL DETAIL
500kV CONTROL PANEL TYPE =B06+WC1

EPESOL Pvt. Ltd.
71-B Garden Block, New Garden Town, Lahore, Pakistan

DWG# EPE/ENU-18/B61571 | SHT: 16 OF 30
DATE: 07.03.2019 | AS BUILT | REV: 0

SCHEME DWG. REF: EPE/ENU-18/B61570

Sr.	CABLE DESIGNATION	CORE CROSS SECTION	DESTINATION
1			
2			
3			
4			
5			
6			
7			
8			
9			
10			
11			
12			

LEGEND:

TEMPORARY SHORTENING LINK

PERMANENT LINK

D- END COVER

1	2	3	4	5	6	7	8	9	10	11	12	REMOTE DESTINATION	TERMINAL BLOCK	TERMINAL NO

TERMINAL STRIP X5								TERMINATION B	
LINK				REFERENCE			TERMINAL NO	ITEM DESIGNATION	TERMINAL NO
				SHT	/	REF			
•				14	/	2A	1		
•				14	/	8A	2		
•				15	/	2A	3		
•				15	/	7A	4		
•				16	/	2A	5		
•				16	/	6A	6		
•				17	/	2A	7		
•				17	/	4A	8		
				14	/	2C	9	B6S01	11
				14	/	2C	10	B6S01	9
				14	/	3C	11	B6S01	15
				14	/	3C	12	B6S01	13
				14	/	3C	13	B6S11	11
				14	/	4C	14	B6S11	9
				14	/	4C	15	B6S11	15
				14	/	4C	16	B6S11	13
				14	/	5C	17	B6S12	11
				14	/	5C	18	B6S12	9
				14	/	5C	19	B6S12	15
				14	/	5C	20	B6S12	13
				14	/	6C	21	B6S10	11
				14	/	6C	22	B6S10	9
				14	/	6C	23	B6S10	15
				14	/	6C	24	B6S10	13
				14	/	7C	25	B6ES10	11
				14	/	7C	26	B6ES10	9
				14	/	7C	27	B6ES10	15
				14	/	8C	28	B6ES10	13
				15	/	2C	29	B6S02	11
				15	/	2C	30	B6S02	9
				15	/	3C	31	B6S02	15
				15	/	3C	32	B6S02	13
				15	/	3C	33	B6S21	11
				15	/	4C	34	B6S21	9
				15	/	4C	35	B6S21	15
				15	/	4C	36	B6S21	13
				15	/	5C	37	B6S22	11
				15	/	5C	38	B6S22	9
				15	/	5C	39	B6S22	15
				15	/	5C	40	B6S22	13

APPROVED	CHECKED	DRAWN
NAH	MSS	MUR

PROJECT: NTDC PO# CE/MP&M/M(P)/AM-VI/EO/9417-29 DATED 14.11.2018 FOR PROCUREMENT OF 220KV & 500KV PROTECTION & CONTROL PANELS

TITLE: TERMINAL DETAIL
500kV CONTROL PANEL TYPE =B06+WC1

EPESOL Pvt. Ltd.
71-B Garden Block, New Garden Town, Lahore, Pakistan

DWG# EPE/ENU-18/B61571 | SHT: 17 OF 30
DATE: 07.03.2019 | AS BUILT | REV: 0

SCHEME DWG. REF: EPE/ENU-18/B61570

Sr.	CABLE DESIGNATION	CORE CROSS SECTION	DESTINATION
1			
2			
3			
4			
5			
6			
7			
8			
9			
10			
11			
12			

LEGEND:

TEMPORARY SHORTENING LINK

PERMANENT LINK

D- END COVER

1	2	3	4	5	6	7	8	9	10	11	12	REMOTE DESTINATION	TERMINAL BLOCK	TERMINAL NO

	TERMINAL STRIP X5								TERMINATION B	
	LINK				REFERENCE			TERMINAL NO	ITEM DESIGNATION	TERMINAL NO
					SHT	/	REF			
					15	/	6C	41	B6S20	11
					15	/	6C	42	B6S20	9
					15	/	6C	43	B6S20	15
					15	/	6C	44	B6S20	13
					16	/	2C	45	B6S03	11
					16	/	2C	46	B6S03	9
					16	/	3C	47	B6S03	15
					16	/	3C	48	B6S03	13
					16	/	3C	49	B6S31	11
					16	/	3C	50	B6S31	9
					16	/	3C	51	B6S31	15
					16	/	3C	52	B6S31	13
					16	/	5C	53	B6S32	11
					16	/	5C	54	B6S32	9
					16	/	5C	55	B6S32	15
					16	/	5C	56	B6S32	13
								57		
								58		
								59		
D-								60		

APPROVED	CHECKED	DRAWN
NAH	MSS	MUR

PROJECT: NTDC PO# CE/MP&M/M(P)/AM-VI/EO/ 9417-29 DATED 14.11.2018 FOR PROCUREMENT OF 220KV & 500KV PROTECTION & CONTROL PANELS

TITLE: TERMINAL DETAIL
500kV CONTROL PANEL TYPE =B06+WC1

EPESOL Pvt. Ltd.
71-B Garden Block, New Garden Town, Lahore, Pakistan

DWG# EPE/ENU-18/B61571 | SHT: 18 OF 30
DATE: 07.03.2019 | AS BUILT | REV: 0

SCHEME DWG. REF: EPE/ENU-18/B61570

Sr.	CABLE DESIGNATION	CORE CROSS SECTION	DESTINATION
1			
2			
3			
4			
5			
6			
7			
8			
9			
10			
11			
12			

LEGEND:

- TEMPORARY SHORTENING LINK
- PERMANENT LINK
- D- END COVER

1	2	3	4	5	6	7	8	9	10	11	12	REMOTE DESTINATION	TERMINAL BLOCK	TERMINAL NO

TERMINAL STRIP X4								TERMINATION B	
LINK				REFERENCE			TERMINAL NO	ITEM DESIGNATION	TERMINAL NO
				SHT	/	REF			
				18	/	2B	1		
•				18	/	4B	2		
•				18	/	4B	3		
•				18	/	5B	4		
•				18	/	5B	5		
•				19	/	2B	6		
•				19	/	2B	7		
•				19	/	4B	8		
•				19	/	5B	9		
				19	/	6B	10		
				18	/	2B	11	H11	X1
				18	/	2B	12	H12	X1
				18	/	2B	13	H31	X1
				18	/	3B	14	H32	X1
				18	/	3B	15	H21	X1
				18	/	4B	16	H22	X1
				18	/	4B	17	H41	X1
				18	/	5B	18	H42	X1
				18	/	5B	19	H13	X1
				18	/	6B	20	H10	X1
				18	/	6B	21	H43	X1
				18	/	7B	22	H14	X1
				18	/	7B	23	H44	X1
				18	/	8B	24	C1	1
				18	/	8B	25	C4	1
				19	/	1B	26	K20	A1
				19	/	2B	27	K21	A1
				19	/	2B	28	H23	X1
				19	/	2B	29	H20	X1
				19	/	3B	30	H24	X1
				19	/	3B	31	C2	1
				19	/	4B	32	K22	A1
				19	/	4B	33	K23	A1
				19	/	5B	34	H33	X1
				19	/	5B	35	H34	X1
				19	/	6B	36	C3	1
•				36	/	1E	37	K25	34
•				36	/	3B	38	K35	34
•				36	/	4B	39	K35	14
•				36	/	6B	40	K33	14

APPROVED	CHECKED	DRAWN
NAH	MSS	MUR

PROJECT: NTDC PO# CE/MP&M/M(P)/AM-VI/EO/ 9417-29 DATED 14.11.2018 FOR PROCUREMENT OF 220KV & 500KV PROTECTION & CONTROL PANELS

TITLE: TERMINAL DETAIL
500kV CONTROL PANEL TYPE =B06+WC1

EPESOL Pvt. Ltd.
71-B Garden Block, New Garden Town, Lahore, Pakistan

DWG# EPE/ENU-18/B61571 | SHT: 19 OF 30
DATE: 07.03.2019 | AS BUILT | REV: 0

SCHEME DWG. REF: EPE/ENU-18/B61570

Sr.	CABLE DESIGNATION	CORE CROSS SECTION	DESTINATION
1			
2			
3			
4			
5			
6			
7			
8			
9			
10			
11			
12			

LEGEND:

TEMPORARY SHORTENING LINK

PERMANENT LINK

D- END COVER

1	2	3	4	5	6	7	8	9	10	11	12	REMOTE DESTINATION	TERMINAL BLOCK	TERMINAL NO

	TERMINAL STRIP X4								TERMINATION B	
	LINK				REFERENCE			TERMINAL NO	ITEM DESIGNATION	TERMINAL NO
					SHT	/	REF			
					36	/	3B	41	K28	34
	•				36	/	4B	42	K25	41
	•				36	/	4C	43	K29	34
					36	/	6B	44	K31	14
					36	/	1D	45	K28	31
	•				36	/	4C	46	K29	31
	•				36	/	4D	47	K31	11
					36	/	5D	48	K31	11
	•				36	/	1D	49		
	•				36	/	1E	50		
	•				36	/	4D	51		
	•				36	/	5D	52		
					37	/	1C	53	K11	24
					37	/	2C	54	K11	21
					37	/	2C	55	K14	21
					37	/	2C	56	K17	21
					37	/	3C	57	K17	24
					37	/	1E	58	K20	24
					37	/	2E	59	K28	41
					37	/	3E	60	K20	34
					37	/	4E	61	K21	24
					37	/	4E	62	K26	41
D-					37	/	5E	63	K22	34

APPROVED	CHECKED	DRAWN
NAH	MSS	MUR

PROJECT: NTDC PO# CE/MP&M/M(P)/AM-VI/EO/ 9417-29 DATED 14.11.2018 FOR PROCUREMENT OF 220KV & 500KV PROTECTION & CONTROL PANELS

TITLE: TERMINAL DETAIL
500kV CONTROL PANEL TYPE =B06+WC1

EPESOL Pvt. Ltd.
71-B Garden Block, New Garden Town, Lahore, Pakistan

DWG# EPE/ENU-18/B61571 | SHT: 20 OF 30
DATE: 07.03.2019 | AS BUILT | REV: 0

SCHEME DWG. REF: EPE/ENU-18/B61570

Sr.	CABLE DESIGNATION	CORE CROSS SECTION	DESTINATION
1			
2			
3			
4			
5			
6			
7			
8			
9			
10			
11			
12			

LEGEND:

- TEMPORARY SHORTENING LINK
- PERMANENT LINK
- D– END COVER

1	2	3	4	5	6	7	8	9	10	11	12	REMOTE DESTINATION	TERMINAL BLOCK	TERMINAL NO

TERMINAL STRIP X9								TERMINATION B	
LINK				REFERENCE			TERMINAL NO	ITEM DESIGNATION	TERMINAL NO
				SHT	/	REF			
•				20	/	2B	1	TL	1a
•				20	/	6B	2		
•				20	/	7B	3		
•				20	/	8B	4		
•				21	/	2B	5		
•				21	/	4B	6		
•				21	/	5B	7		
•				21	/	8B	8		
•				22	/	2B	9		
•				22	/	3B	10		
•				22	/	3B	11		
•				22	/	6B	12		
•				22	/	7B	13		
•				22	/	8B	14		
•				23	/	2B	15		
•				23	/	4B	16		
•				23	/	4B	17		
•				23	/	8B	18		
•				24	/	2B	19		
•				24	/	8B	20		
•				25	/	2B	21		
•				25	/	7B	22		
•				25	/	7B	23		
•				25	/	8B	24		
•				26	/	2B	25		
•				26	/	3B	26		
•				26	/	4B	27		
•				26	/	8B	28		
•				27	/	2B	29		
•				27	/	6B	30		
•				27	/	7B	31		
•				27	/	7B	32		
							33		
							34		
							35		
							36		
							37		
							38		
							39		
D–							40		

APPROVED	CHECKED	DRAWN
NAH	MSS	MUR

PROJECT: NTDC PO# CE/MP&M/M(P)/AM-VI/EO/ 9417-29 DATED 14.11.2018 FOR PROCUREMENT OF 220KV & 500KV PROTECTION & CONTROL PANELS

TITLE: TERMINAL DETAIL
500kV CONTROL PANEL TYPE =B06+WC1

EPESOL Pvt. Ltd.
71-B Garden Block, New Garden Town, Lahore, Pakistan

DWG# EPE/ENU-18/B61571 | SHT: 21 OF 30
DATE: 07.03.2019 | AS BUILT | REV: 0

SCHEME DWG. REF: EPE/ENU-18/B61570

Sr.	CABLE DESIGNATION	CORE CROSS SECTION	DESTINATION
1			
2			
3			
4			
5			
6			
7			
8			
9			
10			
11			
12			

1	2	3	4	5	6	7	8	9	10	11	12

LEGEND:

TEMPORARY SHORTENING LINK

PERMANENT LINK

D- END COVER

REMOTE DESTINATION	TERMINAL BLOCK	TERMINAL NO

TERMINAL STRIP X10							
LINK				REFERENCE			TERMINAL NO
				SHT	/	REF	
				20	/	2D	1
				20	/	3D	2
				20	/	3D	3
				20	/	4D	4
				20	/	4D	5
				20	/	5D	6
				20	/	5D	7
				20	/	6D	8
				20	/	6D	9
				20	/	7D	10
				20	/	7D	11
				20	/	8D	12
				21	/	2D	13
				21	/	3D	14
				21	/	3D	15
				21	/	4D	16
				21	/	4D	17
				21	/	5D	18
				21	/	5D	19
				21	/	6D	20
				21	/	6D	21
				21	/	7D	22
				21	/	7D	23
				21	/	8D	24
				22	/	2D	25
				22	/	3D	26
				22	/	3D	27
				22	/	4D	28
				22	/	4D	29
				22	/	5D	30
				22	/	5D	31
				22	/	6D	32
				22	/	6D	33
				22	/	7D	34
				22	/	7D	35
				22	/	8D	36

TERMINATION B	
ITEM DESIGNATION	TERMINAL NO
H101	4
H101	5
H101	6
H101	7
H101	8
H101	9
H101	10
H101	11
H101	12
H101	13
H101	14
H101	15
H102	4
H102	5
H102	6
H102	7
H102	8
H102	9
H102	10
H102	11
H102	12
H102	13
H102	14
H102	15
H103	4
H103	5
H103	6
H103	7
H103	8
H103	9
H103	10
H103	11
H103	12
H103	13
H103	14
H103	15

APPROVED	CHECKED	DRAWN
NAH	MSS	MUR

PROJECT: NTDC PO# CE/MP&M/M(P)/AM-VI/EO/ 9417-29 DATED 14.11.2018 FOR PROCUREMENT OF 220KV & 500KV PROTECTION & CONTROL PANELS

TITLE: TERMINAL DETAIL
500kV CONTROL PANEL TYPE =B06+WC1

EPESOL Pvt. Ltd.
71-B Garden Block, New Garden Town, Lahore, Pakistan

DWG# EPE/ENU-18/B61571 | SHT: 22 OF 30
DATE: 07.03.2019 | AS BUILT | REV: 0

SCHEME DWG. REF: EPE/ENU-18/B61570

Sr.	CABLE DESIGNATION	CORE CROSS SECTION	DESTINATION
1			
2			
3			
4			
5			
6			
7			
8			
9			
10			
11			
12			

1	2	3	4	5	6	7	8	9	10	11	12

LEGEND:

TEMPORARY SHORTENING LINK

PERMANENT LINK

D- END COVER

REMOTE DESTINATION	TERMINAL BLOCK	TERMINAL NO

TERMINAL STRIP X10							
LINK				REFERENCE			TERMINAL NO
				SHT	/	REF	
				23	/	2D	37
				23	/	3D	38
				23	/	3D	39
				23	/	4D	40
				23	/	4D	41
				23	/	5D	42
				23	/	5D	43
				23	/	6D	44
				23	/	6D	45
				23	/	7D	46
				23	/	7D	47
				23	/	8D	48
				24	/	2D	49
				24	/	3D	50
				24	/	3D	51
				24	/	4D	52
				24	/	4D	53
				24	/	5D	54
				24	/	5D	55
				24	/	6D	56
				24	/	6D	57
				24	/	7D	58
				24	/	7D	59
				24	/	8D	60
				25	/	2D	61
				25	/	3D	62
				25	/	3D	63
				25	/	4D	64
				25	/	4D	65
				25	/	5D	66
				25	/	5D	67
				25	/	6D	68
				25	/	6D	69
				25	/	7D	70
				25	/	7D	71
				25	/	8D	72

TERMINATION B	
ITEM DESIGNATION	TERMINAL NO
H104	4
H104	5
H104	6
H104	7
H104	8
H104	9
H104	10
H104	11
H104	12
H104	13
H104	14
H104	15
H105	4
H105	5
H105	6
H105	7
H105	8
H105	9
H105	10
H105	11
H105	12
H105	13
H105	14
H105	15
H106	4
H106	5
H106	6
H106	7
H106	8
H106	9
H106	10
H106	11
H106	12
H106	13
H106	14
H106	15

APPROVED	CHECKED	DRAWN
NAH	MSS	MUR

PROJECT: NTDC PO# CE/MP&M/M(P)/AM-VI/EO/ 9417-29 DATED 14.11.2018 FOR PROCUREMENT OF 220KV & 500KV PROTECTION & CONTROL PANELS

TITLE: TERMINAL DETAIL
500kV CONTROL PANEL TYPE =B06+WC1

EPESOL Pvt. Ltd.
71-B Garden Block, New Garden Town, Lahore, Pakistan

DWG# EPE/ENU-18/B61571 | SHT: 23 OF 30
DATE: 07.03.2019 | AS BUILT | REV: 0

SCHEME DWG. REF: EPE/ENU-18/B61570

Sr.	CABLE DESIGNATION	CORE CROSS SECTION	DESTINATION
1			
2			
3			
4			
5			
6			
7			
8			
9			
10			
11			
12			

1	2	3	4	5	6	7	8	9	10	11	12

LEGEND:

TEMPORARY SHORTENING LINK

PERMANENT LINK

D- END COVER

REMOTE DESTINATION	TERMINAL BLOCK	TERMINAL NO

	TERMINAL STRIP X10							
	LINK				REFERENCE			TERMINAL NO
					SHT	/	REF	
					26	/	2D	73
					26	/	3D	74
					26	/	3D	75
					26	/	4D	76
					26	/	4D	77
					26	/	5D	78
					26	/	5D	79
					26	/	6D	80
					26	/	6D	81
					26	/	7D	82
					26	/	7D	83
					26	/	8D	84
					27	/	2D	85
					27	/	3D	86
					27	/	3D	87
					27	/	4D	88
					27	/	4D	89
					27	/	5D	90
					27	/	5D	91
					27	/	6D	92
					27	/	6D	93
					27	/	7D	94
					27	/	7D	95
					27	/	8D	96
								97
								98
								99
D-								100

TERMINATION B	
ITEM DESIGNATION	TERMINAL NO
H107	4
H107	5
H107	6
H107	7
H107	8
H107	9
H107	10
H107	11
H107	12
H107	13
H107	14
H107	15
H108	4
H108	5
H108	6
H108	7
H108	8
H108	9
H108	10
H108	11
H108	12
H108	13
H108	14
H108	15

APPROVED	CHECKED	DRAWN
NAH	MSS	MUR

PROJECT:
NTDC PO# CE/MP&M/M(P)/AM-VI/EO/9417-29 DATED 14.11.2018 FOR PROCUREMENT OF 220KV & 500KV PROTECTION & CONTROL PANELS

TITLE:
TERMINAL DETAIL
500kV CONTROL PANEL TYPE =B06+WC1

EPESOL Pvt. Ltd.
71-B Garden Block, New Garden Town, Lahore, Pakistan

DWG# EPE/ENU-18/B61571 | SHT: 24 OF 30
DATE: 07.03.2019 | AS BUILT | REV: 0

SCHEME DWG. REF: EPE/ENU-18/B61570

Sr.	CABLE DESIGNATION	CORE CROSS SECTION	DESTINATION
1			
2			
3			
4			
5			
6			
7			
8			
9			
10			
11			
12			

LEGEND:

TEMPORARY SHORTENING LINK

PERMANENT LINK

D- END COVER

1	2	3	4	5	6	7	8	9	10	11	12	REMOTE DESTINATION	TERMINAL BLOCK	TERMINAL NO

	TERMINAL STRIP X11								TERMINATION B	
	LINK				REFERENCE			TERMINAL NO	ITEM DESIGNATION	TERMINAL NO
					SHT	/	REF			
					28	/	3B	1		
					28	/	4A	2		
					28	/	4A	3		
	•				28	/	6B	4		
	•				29	/	2B	5		
	•				29	/	6A	6		
					28	/	5A	7		
					28	/	6A	8		
	•				29	/	6B	9		
								10		
								11		
								12		
								13		
								14		
D-								15		

APPROVED	CHECKED	DRAWN
NAH	MSS	MUR

PROJECT: NTDC PO# CE/MP&M/M(P)/AM-VI/EO/ 9417-29 DATED 14.11.2018 FOR PROCUREMENT OF 220KV & 500KV PROTECTION & CONTROL PANELS

TITLE: TERMINAL DETAIL
500kV CONTROL PANEL TYPE =B06+WC1

EPESOL Pvt. Ltd.
71-B Garden Block, New Garden Town, Lahore, Pakistan

DWG# EPE/ENU-18/B61571 | SHT: 25 OF 30
DATE: 07.03.2019 | AS BUILT | REV: 0

SCHEME DWG. REF: EPE/ENU-18/B61570

Sr.	CABLE DESIGNATION	CORE CROSS SECTION	DESTINATION
1			
2			
3			
4			
5			
6			
7			
8			
9			
10			
11			
12			

LEGEND:

TEMPORARY SHORTENING LINK

PERMANENT LINK

D- END COVER

1	2	3	4	5	6	7	8	9	10	11	12	REMOTE DESTINATION	TERMINAL BLOCK	TERMINAL NO

	TERMINAL STRIP X12								TERMINATION B	
	LINK				REFERENCE			TERMINAL NO	ITEM DESIGNATION	TERMINAL NO
					SHT	/	REF			
					28	/	2D	1	H109	4
					28	/	3D	2	H109	5
					28	/	3D	3	H109	6
					28	/	4D	4	H109	7
					28	/	4D	5	H109	8
					28	/	5D	6	H109	9
					28	/	5D	7	H109	10
					28	/	6D	8	H109	11
					28	/	6D	9	H109	12
					28	/	7D	10	H109	13
					28	/	7D	11	H109	14
					28	/	8D	12	H109	15
					29	/	2D	13	H110	4
					29	/	3D	14	H110	5
					29	/	3D	15	H110	6
					29	/	4D	16	H110	7
					29	/	4D	17	H110	8
					29	/	5D	18	H110	9
					29	/	5D	19	H110	10
					29	/	6D	20	H110	11
					29	/	6D	21	H110	12
					29	/	7D	22	H110	13
					29	/	7D	23	H110	14
					29	/	8D	24	H110	15
D-								25		

APPROVED	CHECKED	DRAWN
NAH	MSS	MUR

PROJECT: NTDC PO# CE/MP&M/M(P)/AM-VI/EO/ 9417-29 DATED 14.11.2018 FOR PROCUREMENT OF 220KV & 500KV PROTECTION & CONTROL PANELS

TITLE: TERMINAL DETAIL
500kV CONTROL PANEL TYPE =B06+WC1

EPESOL Pvt. Ltd.
71-B Garden Block, New Garden Town, Lahore, Pakistan

DWG# EPE/ENU-18/B61571 | SHT: 26 OF 30
DATE: 07.03.2019 | AS BUILT | REV: 0

SCHEME DWG. REF: EPE/ENU-18/B61570

Sr.	CABLE DESIGNATION	CORE CROSS SECTION	DESTINATION
1			
2			
3			
4			
5			
6			
7			
8			
9			
10			
11			
12			

LEGEND:

TEMPORARY SHORTENING LINK

PERMANENT LINK

D- END COVER

1	2	3	4	5	6	7	8	9	10	11	12	REMOTE DESTINATION	TERMINAL BLOCK	TERMINAL NO

	TERMINAL STRIP X73									TERMINATION B	
	LINK				REFERENCE			TERMINAL NO		ITEM DESIGNATION	TERMINAL NO
					SHT	/	REF				
					30	/	2C	1		K1	24
					30	/	3C	2		K1	21
					30	/	3C	3		K1	24
					30	/	5C	4		K5	44
					30	/	5C	5		K5	41
					30	/	5C	6		K5	44
					30	/	6C	7		K57	24
					30	/	6C	8		K57	21
					30	/	7C	9		K57	24
D-								10			

APPROVED	CHECKED	DRAWN
NAH	MSS	MUR

PROJECT: NTDC PO# CE/MP&M/M(P)/AM-VI/EO/ 9417-29 DATED 14.11.2018 FOR PROCUREMENT OF 220KV & 500KV PROTECTION & CONTROL PANELS

TITLE: TERMINAL DETAIL
500kV CONTROL PANEL TYPE =B06+WC1

EPESOL Pvt. Ltd.
71-B Garden Block, New Garden Town, Lahore, Pakistan

DWG# EPE/ENU-18/B61571 | SHT: 27 OF 30
DATE: 07.03.2019 | AS BUILT | REV: 0

SCHEME DWG. REF: EPE/ENU-18/B61570

Sr.	CABLE DESIGNATION	CORE CROSS SECTION	DESTINATION
1			
2			
3			
4			
5			
6			
7			
8			
9			
10			
11			
12			

LEGEND:

TEMPORARY SHORTENING LINK

PERMANENT LINK

D- END COVER

1	2	3	4	5	6	7	8	9	10	11	12	REMOTE DESTINATION	TERMINAL BLOCK	TERMINAL NO

	TERMINAL STRIP X7								TERMINATION B	
	LINK				REFERENCE			TERMINAL NO	ITEM DESIGNATION	TERMINAL NO
					SHT	/	REF			
					35	/	3A	1	K10	41
					35	/	3D	2	K27	A1
					35	/	4D	3	K28	A1
					35	/	5A	4	K13	41
					35	/	5D	5	K29	A1
					35	/	7A	6	K16	41
D-								7		

APPROVED	CHECKED	DRAWN
NAH	MSS	MUR

PROJECT:
NTDC PO# CE/MP&M/M(P)/AM-VI/EO/ 9417-29 DATED 14.11.2018 FOR PROCUREMENT OF 220KV & 500KV PROTECTION & CONTROL PANELS

TITLE:
TERMINAL DETAIL
500kV CONTROL PANEL TYPE =B06+WC1

EPESOL Pvt. Ltd.
71-B Garden Block, New Garden Town, Lahore, Pakistan

DWG# EPE/ENU-18/B61571 | SHT: 28 OF 30
DATE: 07.03.2019 | AS BUILT | REV: 0

SCHEME DWG. REF: EPE/ENU-18/B61570

Sr.	CABLE DESIGNATION	CORE CROSS SECTION	DESTINATION
1			
2			
3			
4			
5			
6			
7			
8			
9			
10			
11			
12			

LEGEND:

TEMPORARY SHORTENING LINK

PERMANENT LINK

D- END COVER

1	2	3	4	5	6	7	8	9	10	11	12	REMOTE DESTINATION	TERMINAL BLOCK	TERMINAL NO

TERMINAL STRIP XD								TERMINATION B	
LINK				REFERENCE			TERMINAL NO	ITEM DESIGNATION	TERMINAL NO
				SHT	/	REF			
				14	/	2D	1	XD	2P
				14	/	4D	2	XD	3P
				14	/	5D	3	XD	4P
				14	/	6D	4	XD	5P
				14	/	7D	5	XD	6P
				15	/	2D	6	XD	7P
				15	/	4D	7	XD	8P
				15	/	5D	8	XD	9P
				15	/	6D	9	XD	10P
				16	/	3D	10	XD	11P
				16	/	4D	11	XD	12P
				16	/	5D	12	XD	13P
				17	/	3D	13	XD	14P
				17	/	4D	14	XD	15P
				18	/	2D	15	XD	16P
				18	/	2D	16	XD	17P
				18	/	3D	17	XD	18P
				18	/	3D	18	XD	19P
				18	/	4D	19	XD	20P
				18	/	4D	20	XD	21P
				18	/	5D	21	XD	22P
				18	/	5D	22	XD	23P
				18	/	6D	23	XD	24P
				18	/	6D	24	XD	25P
				18	/	7D	25	XD	26P
				18	/	7D	26	XD	27P
				18	/	7D	27	XD	28P
				19	/	2D	28	XD	29P
				19	/	3D	29	XD	30P
				19	/	3D	30	XD	31P
				19	/	5D	31	XD	32P
				19	/	6D	32	XD	33P
				35	/	7D	33	K26	A1
				35	/	7D	34	K33	A1
				35	/	8D	35		
				35	/	8D	36	K34	A1
				35	/	8D	37	K30	A1
				35	/	8D	38	K33	A1
				35	/	8D	39	K34	A1
				35	/	8D	40	K25	A1

APPROVED	CHECKED	DRAWN
NAH	MSS	MUR

PROJECT: NTDC PO# CE/MP&M/M(P)/AM-VI/EO/ 9417-29 DATED 14.11.2018 FOR PROCUREMENT OF 220KV & 500KV PROTECTION & CONTROL PANELS

TITLE: TERMINAL DETAIL
500kV CONTROL PANEL TYPE =B06+WC1

EPESOL Pvt. Ltd.
71-B Garden Block, New Garden Town, Lahore, Pakistan

DWG# EPE/ENU-18/B61571 | SHT: 29 OF 30
DATE: 07.03.2019 | AS BUILT | REV: 0

SCHEME DWG. REF: EPE/ENU-18/B61570

Sr.	CABLE DESIGNATION	CORE CROSS SECTION	DESTINATION
1			
2			
3			
4			
5			
6			
7			
8			
9			
10			
11			
12			

LEGEND:

TEMPORARY SHORTENING LINK

PERMANENT LINK

D- END COVER

1	2	3	4	5	6	7	8	9	10	11	12	REMOTE DESTINATION	TERMINAL BLOCK	TERMINAL NO		TERMINAL STRIP XD								TERMINATION B	
																LINK				REFERENCE			TERMINAL NO	ITEM DESIGNATION	TERMINAL NO
																				SHT	/	REF			
															D-					14	/	2D	41	K30	A1

APPROVED	CHECKED	DRAWN
NAH	MSS	MUR

PROJECT: NTDC PO# CE/MP&M/M(P)/AM-VI/EO/9417-29 DATED 14.11.2018 FOR PROCUREMENT OF 220KV & 500KV PROTECTION & CONTROL PANELS

TITLE: TERMINAL DETAIL
500kV CONTROL PANEL TYPE =B06+WC1

EPESOL Pvt. Ltd.
71-B Garden Block, New Garden Town, Lahore, Pakistan

DWG# EPE/ENU-18/B61571 | SHT: 30 OF 30
DATE: 07.03.2019 | AS BUILT | REV: 0