Grid Solutions
A GE and Alstom joint venture

220kV/132kV GIS SUBSTATION
GHAZI ROAD , LAHORE

132kV BUS COUPLER RELAY PANEL
SCHEMATIC DRAWINGS

REFERENCE DRAWINGS		
SR. NO.	DRAWING TITLE	DOCUMENT NO.
1.	220kV / 132kV Metering & Protection SLD	P60194-E-SLMP-001

REVISION HISTORY					
REV	DATE	DRW. BY	CHK. BY	APR. BY	REVISION DESCRIPTION
0	18.08.2018	MUR	AMR	NAH	AS BUILT

Scale: NOT-TO-SCALE

Sheet size: A3

Client: NATIONAL TRANSMISSION & DISPATCH COMPANY LIMITED (NTDC-WAPDA)

Contractor: Grid Solutions, A GE and Alstom joint venture

Manufacturer: EPESOL, 71-B Garden Block, New Garden Town, Lahore, Pakistan

Project: 220kV / 132kV GIS SUBSTATION GHAZI ROAD , LAHORE

Title: 132kV BUS COUPLER RELAY PANEL (=E11+RP1) SCHEMATIC DRAWINGS

Order no: P-60194

Document no: P60194-E-EBR-SC-001

Sheet type: A

Total sheets: 21

Sheet no: 1

DOC / DWG REVIEW CODE

- ☐ A Approved, Issue IFC.
- ☐ B Approved with comments as noted, Issue IFC after incorporation of these comments.
- ☐ C Revise and re-submit for approval.
- ☐ D Rejected.

Signed ..... Date .....

Permission to proceed does not constitute acceptance of approval of design details, analysers, test methods or materials/ selected by the CONTRACTOR and does not relieve the CONTRACTOR from full compliance with AGREEMENT obligations.

PAGE NO.	SHEET NAME	SHEET DESCRIPTION	ISSUE / REVISION										
			A	B	C	D	E	F	01	02	03	04	05
01	A	Cover Sheet			X								
02	AA	List Of Contents			X								
03	AB	Symbol and Legends			X								
04	AC1	Component List			X								
05, 05a	AD, AD1	Panel View			X								
06	AE	Bay Concept & Protection Logic			X								
07	D	AC Supply Distribution Circuit			X								
08	E	DC Supply Distribution Circuit			X								
09	F	AC/DC Supply Failure Circuit			X								
10	G	Relay Power Supply Circuit			X								
11	H2	O/C & E/F CT Input Circuit			X								
12	K1	Protection Trips Circuit			X								
13	K11	Trips Circuit Supervision			X								
14	NA2	System Alarm Circuit			X								
15	PA2	Protection Inter Circuit			X								
16	RA1	Annunciation Circuit			X								
17	RA2	Event & Fault Recorder Circuit			X								
18	RA3	SCADA Circuit			X								
19	Z1	Component Diagram			X								
20	Z3	Component Diagram			X								
21	Z4	Component Diagram			X								

All information contained in this document is the exclusive property of GE GRID SOLUTIONS and shall not be used, copied or communicated to third parties without its prior authorization.

REV.	DESCRIPTION	DATE	DRAWER
0	AS BUILT	18.08.2018	MSC

Manufacturer: EPESOL, 71-B Gardan Block, New Garden Town, Lahore, Pakistan

Contractor: Grid Solutions, A GE and Alstom joint venture

Client: NATIONAL TRANSMISSION & DISPATCH COMPANY LIMITED (NTDC-WAPDA)

Project: 220kV/132kV GIS SUBSTATION GHAZI ROAD, LAHORE

Title: 132kV BUS COUPLER RELAY PANEL (=E11+RP1) LIST OF CONTANTS

Drawing no. P60194-E-EBR-SC-001

Project no.	Sheet type	Sheet no.
P-60194	AA	02

SYMBOL	DESCRIPTION	SYMBOL	DESCRIPTION	SYMBOL	DESCRIPTION	SYMBOL	DESCRIPTION
	CIRCUIT BREAKER		MINIATURE CIRCUIT BREAKER		AUXILIARY CONTACTOR NO+NC	21	DISTANCE
	SWITCH/ISOLATOR		SELECTOR SWITCH	A	AMMETER	24	OVEREXCITATION
	EARTHING		LIMITED SWITCH	V	VOLTMETER	25	SYCHROCHECK
	GIS TERMINATION	A1 <& A2	HUMIDITY & TEMPERATURE CONTROLLER	PF	POWER FACTOR METER	49	THERMAL OVERLOAD
	SF6 TO AIR BUSHING		PANEL HEATER	DPM	DIGITAL PANEL METER	50/51	PHASE OVERCURRENT
	LINE TRAP	PH N	THREE PIN SOCKET	MW	ACTIVE POWER METER	50N/51N	EARTH FAULT
	SURGE ARRESTOR		INDICATION LIGHT	MVAR	REACTIVE POWER METER	50BF	CIRCUIT BREAKER FAILURE
	CURRENT TRANSFORMER		PUSH BUTTON	KWH	ENERGY METER	64	RESTRICTED EARTH FAULT
W1 W2	COUPLING CAPACITOR VOLTAGE TRANSFORMER		AUXILIARY CONTACTOR COIL			67N	DIRECTIONAL EARTH FAULT
	POWER TRANSFORMER		POWER SUPPLY AC/DC			68	POWER SWING BLOCKING
	AUTO TRANSFORMER		TERMINAL			78	OUT OF STEP
			OPTO CONTACTS			79	AUTO-RECLOSING
			RELAY CONTACTS			85	COMMUNICATION FAILURE
			HOOTER			87T	TRAFO DIFFERENTIAL
			AC BELL			87C	LOW IMPEDANCE DIFFERENTIAL CONNECTION
						87BB	LOW IMPEDANCE DIFFERENTIAL BUSBAR

All information contained in this document is the exclusive property of GE GRID SOLUTIONS and shall not be used, copied or communicated to third parties without its prior authorization.

REV.	DESCRIPTION	DATE	DRAWER
0	AS BUILT	18.08.2018	MSC

Manufacturer: EPESOL, 21-B Gulshan Block, New Garden Town, Lahore, Pakistan

Contractor: GE Grid Solutions, A GE and Alstom joint venture

Client: NATIONAL TRANSMISSION & DISPATCH COMPANY LIMITED (NTDC-WAPDA)

Project: 220kV/132kV GIS SUBSTATION GHAZI ROAD, LAHORE

Title: 132kV BUS COUPLER RELAY PANEL (=E11+RP1) SYMBOLA AND LEGENDS

Drawing no. P60194-E-EBR-SC-001

Project no.	Sheet type	Sheet no.
P-60194	AB	03

QTY.	DEVICE DESCRIPTION	DEVICE SPECIFICATIONS DEVICE TYPE ; TECHNICAL DATA / SPECIFICATIONS	DEVICE DESIGNITION	MANUFACTURER
01	OVER CURRENT PROTECTION RELAY	AGILE P14N, Cortec: P14N-B16A7C570A	-F50	GE
		08 Opto Inputs, 08 Relay Outputs		
02	TRIP CIRCUIT SUPERVISION	MVAX31, Cortec: MVAX31-S1DD0754A	-F94B-C	GE
01	TEST BLOCK	MMLG01, Cortec: MMLG01-R1AA9002D	-XT50	GE
01	LOCKOUT RELAY (HAND/ELECTRICAL RESET)	MVAJ105, Cortec: MVAJ105-RA0802A	-F86-1	GE
		Supply: 110-125VDC, 8 NO + 2 NC Contacts		
04	RESISTORS	4KΩ	R94 B/C 1-2	GE
02	RESISTOR	1.5KΩ	R94 B/C 3	GE
02	CONTROL MCB - PANEL LIGHT & HEATER	2-Pole, Ratings: 2A, 240VAC, 10kA @ 240VAC, 2 C/O Contacts, Ord: G62C02+CAH(2)	-F101-102	GE
01	CONTROL ELCB - PANEL SOCKET	2-Pole, Ratings: 16A, 30mA, 240VAC, 1P+N, 2 C/O Contacts, Ord: DM100C16/030+CAH(2)	-F103	GE
03	CONTROL MCB - DC DISTRIBUTION	2-Pole, Ratings: 4A, 250VDC, 10kA @ 250VDC, 2 C/O Contacts, Ord: EP102UCC04+CAH(2)	-F202-204	GE
01	PUSHBUTTON - RELAY LED RESET	Type: Switch (A Type), Color : BLACK , Supply : 110VDC, Ord: YS-AP1-2-40-B-D-W	-S50R	YONGSUNG
01	INDICATION LAMP - DC SUPPLY FAILURE	Type: Integrated LED, Color : RED , Supply : 230VAC @ 50Hz, Ord: YS-PL-2-AL-22-R-W	-H200	YONGSUNG
01	AUXILIARY CONTACTOR - SUPPLY CHANGEOVER	Coil Voltage: 110VDC, 16A, 3 NO + 3 NC Contacts, Ord: MCRC022ATWJ+MARN211AT	-KDCO	GE
02	CONTACTOR RELAY	Coil Voltage: 230VAC @ 50/60 Hz, 6A, 4 C/O Contacts, Ord: PRC4M40ANL	-KACM, -KDC	GE
07	CONTACTOR RELAY	Coil Voltage: 110VDC, DIODE, 4 C/O Contacts, Ord: PRC4M40DCJL	-KDCM, -KAC, -K94B, -K94C, -K50T, -K50F, -KDC2	GE
01	PANEL LIGHT	230VAC @ 50Hz, 05W, Ord: YS-T8-30-5W	-H100	YONGSUNG
01	DOOR SWITCH	230VAC @ 50Hz, 1 NO Contact, Ord: YS P3315GW-B + YS MS-C	-S100	YONGSUNG
01	THREE PIN SOCKET	1N+PE, 16A, 230VAC @ 50Hz	-X100	LOCAL
01	PANEL HEATER	240VAC @ 50Hz, 50W	-R100	E-LABS
01	HUMIDITY & TEMPERATURE CONTROLLER	40-90%RH, 25-50 deg.C, 240VAC @ 50Hz	-B100	E-LABS
04	TERMINAL BLOCKS - AC SUPPLY DISTRIBUTION	Screw-type, Feed Through Terminal, CBD-4	-XAC	CABUR
04	TERMINAL BLOCKS - DC SUPPLY DISTRIBUTION	Screw-type, Feed Through Terminal, CBD-4	-XDC-1, -XDC-2	CABUR
04	TERMINAL BLOCKS - SPARE CONTROL DC MCB	Screw-type, Feed Through Terminal, CBD-4	-X3	CABUR
18	TERMINAL BLOCKS - O/C & E/F CT INPUTS, INCL. SPARE	Screw-type, Feed Through Terminal, With Shortening Links, SCB-6	-X5	CABUR
14	TERMINAL BLOCKS - TRIP CIRCUIT SUPERVISION	Screw-type, Feed Through Terminal, CBD-4	-XTC1, -XTC2	CABUR
04	TERMINAL BLOCKS - PROTECTION INTER-CIRCUITS	Screw-type, Feed Through Terminal, CBD-4	-X9	CABUR
08	TERMINAL BLOCKS - ANNUNCIATOR CIRCUIT	Screw-type, Feed Through Terminal, CBD-4	-XAN	CABUR
07	TERMINAL BLOCKS - ER & FR CIRCUITS	Screw-type, Feed Through Terminal, CBD-4	-XEV, -XFR	CABUR
04	TERMINAL BLOCKS - SCADA CIRCUIT	Screw-type, Feed Through Terminal, CBD-4	-XSC	CABUR
06	TERMINAL BLOCKS - SPARE	Screw-type, Feed Through Terminal, CBD-4	-X	CABUR

All information contained in this document is the exclusive property of GE GRID SOLUTIONS and shall not be used, copied or communicated to third parties without its prior authorization.

REV.	DESCRIPTION	DATE	DRAWER
0	AS BUILT	18.08.2018	MSC

Manufacturer: EPESOL, 21-B Garden Block, New Garden Town, Lahore, Pakistan

Contractor: GE Grid Solutions, A GE and Alstom joint venture

Client: NATIONAL TRANSMISSION & DISPATCH COMPANY LIMITED (NTDC-WAPDA)

Project: 220kV/132kV GIS SUBSTATION GHAZI ROAD, LAHORE

Title: 132kV BUS COUPLER RELAY PANEL (=E11+RP1) COMPONENT LIST

Drawing no. P60194-E-EBR-SC-001

Project no.	Sheet type	Sheet no.
P-60194	AC1	04

All information contained in this document is the exclusive property of GE GRID SOLUTIONS and shall not be used, copied or communicated to third parties without its prior authorization.

FRONT VIEW WITH DOOR

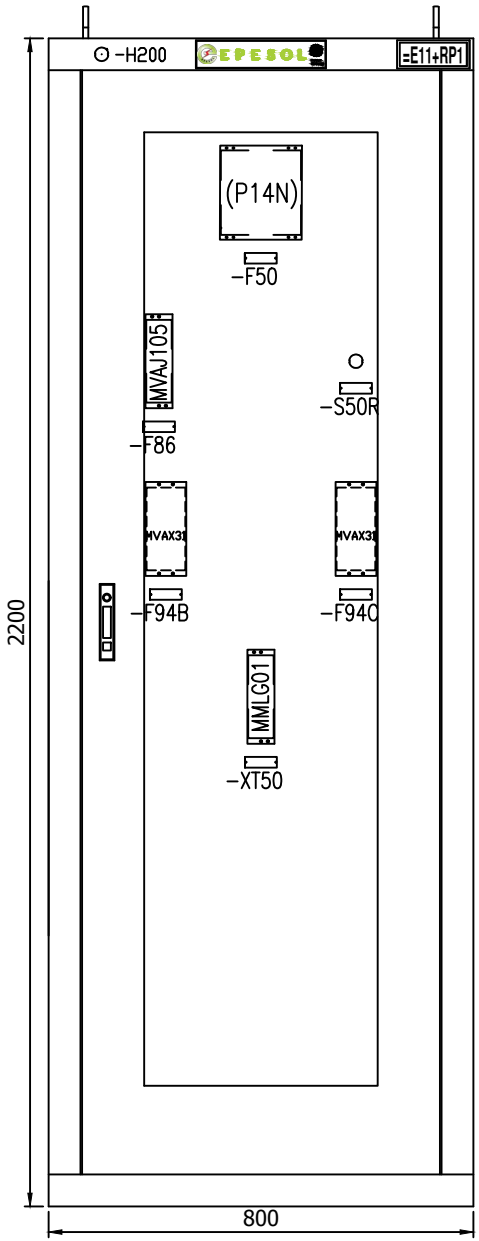

LEFT SIDE VIEW

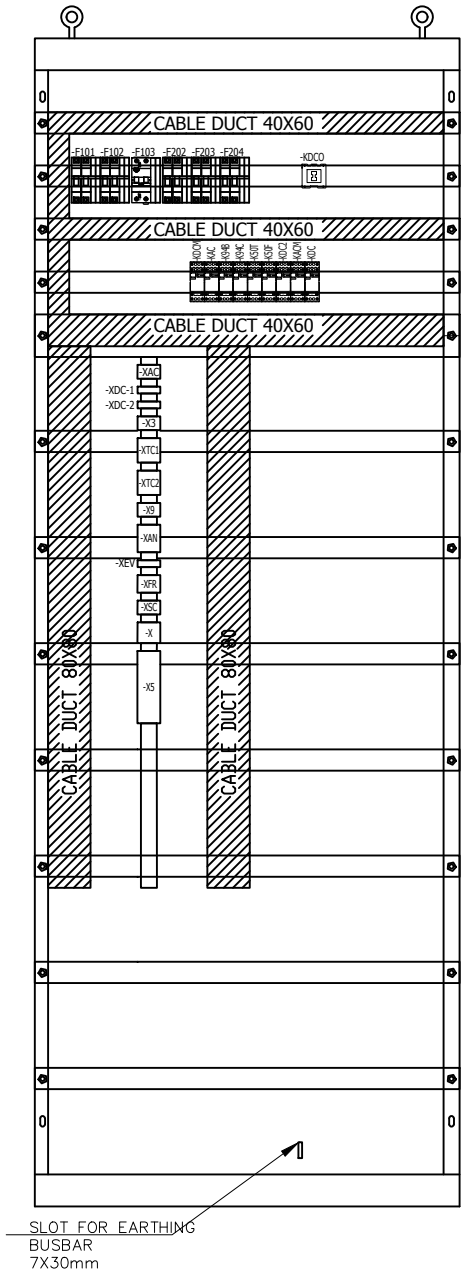

RIGHT SIDE VIEW

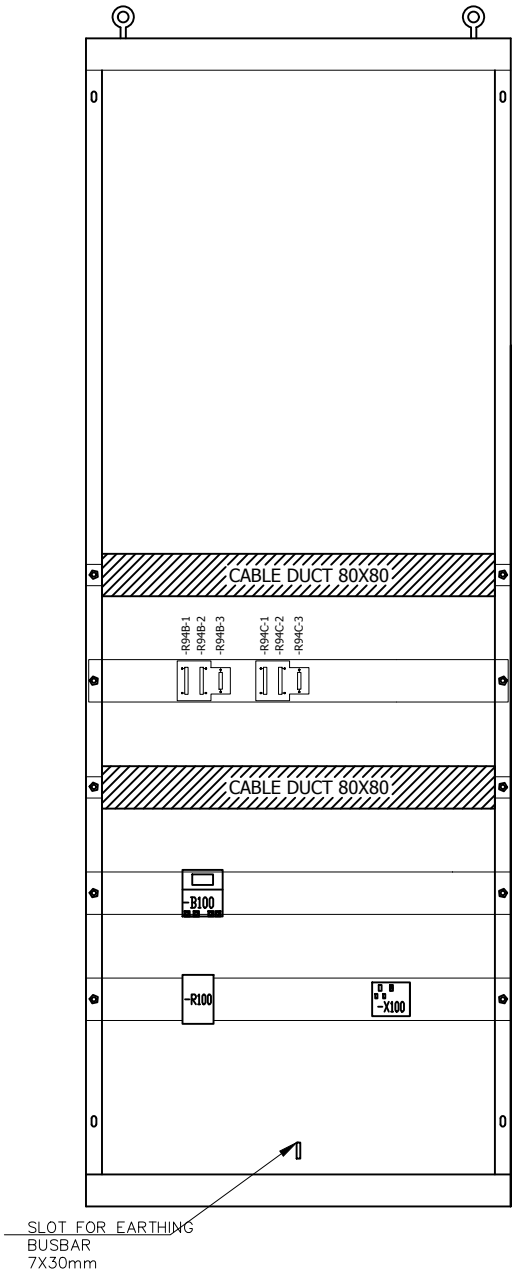

REV.	DESCRIPTION	DATE	DRAWER
0	AS BUILT	18.08.2018	MSC

Manufacturer: EPESOL, 71-B Garden Block, New Garden Town, Lahore, Pakistan

Contractor: Grid Solutions, A GE and Alstom joint venture

Client: NATIONAL TRANSMISSION & DISPATCH COMPANY LIMITED (NTDC-WAPDA)

Project: 220kV/132kV GIS SUBSTATION GHAZI ROAD, LAHORE

Title: 132kV BUS COUPLER RELAY PANEL (=E11+RP1) PANEL VIEW

Drawing no.: P60194-E-EBR-SC-001

Project no.	Sheet type	Sheet no.
P-60194	AD	05

All information contained in this document is the exclusive property of GE GRID SOLUTIONS and shall not be used, copied or communicated to third parties without its prior authorization.

BACK VIEW WITHOUT DOOR

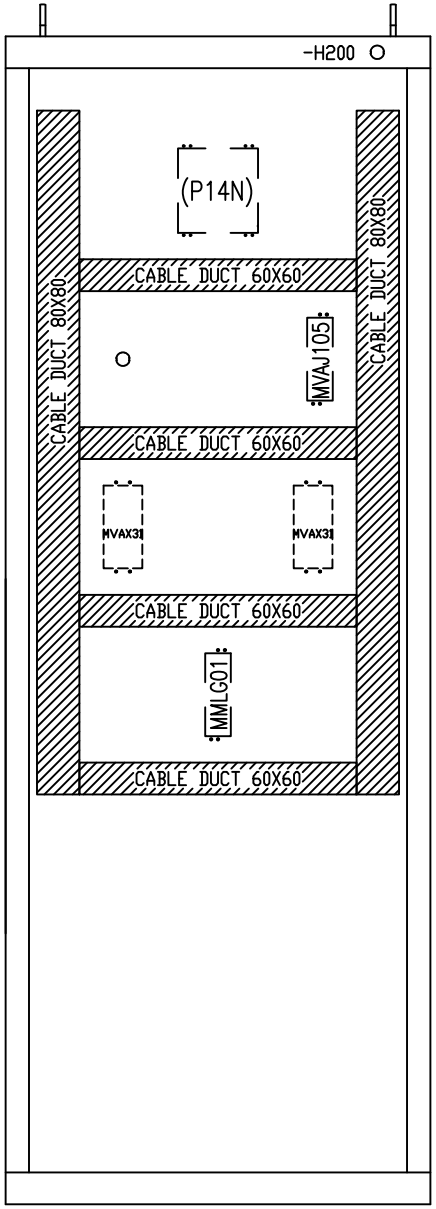

BACK VIEW WITH DOOR

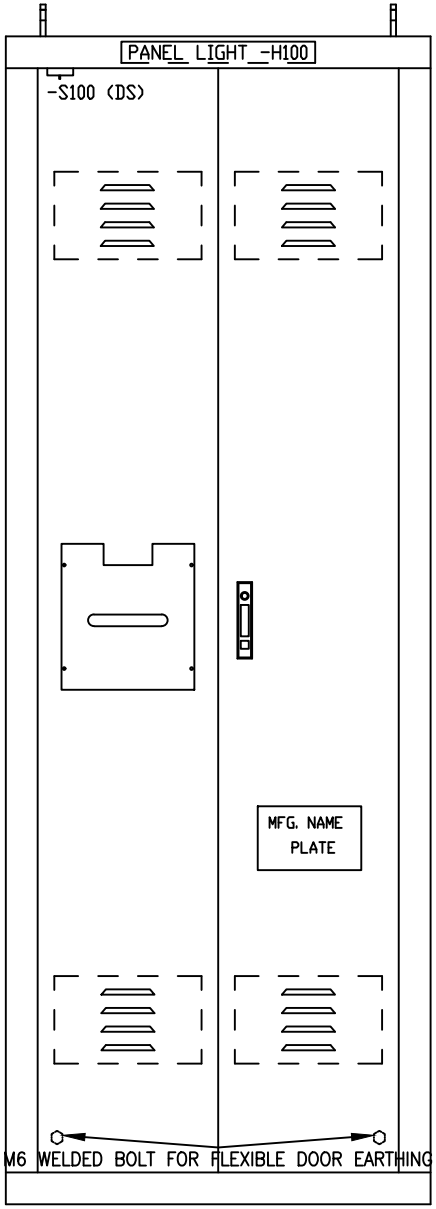

TOP VIEW

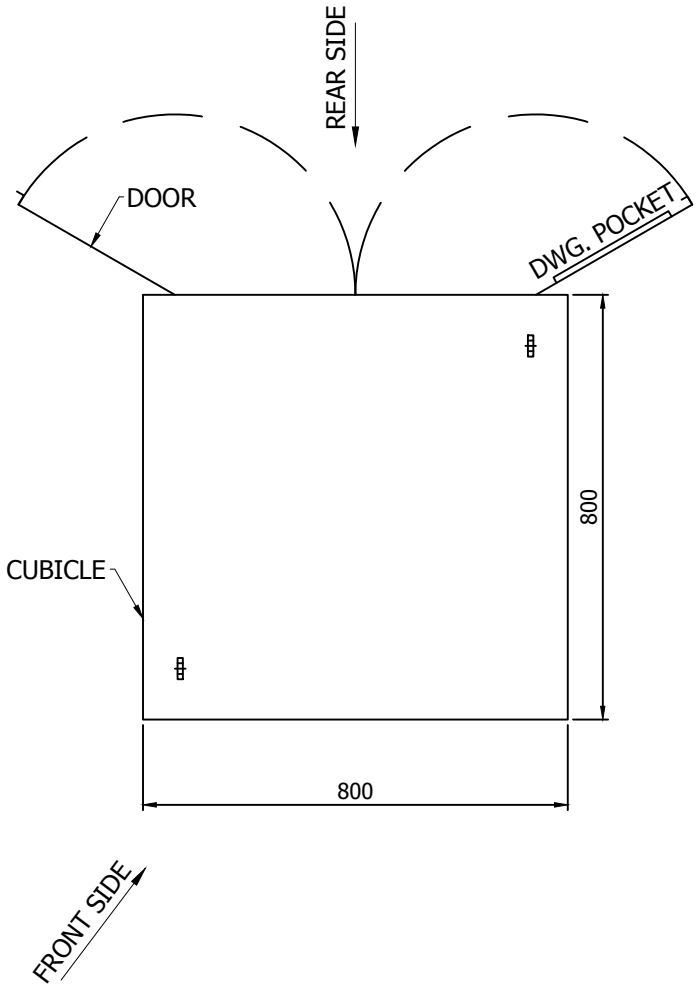

NOTE:-

1 - PANEL DIMENSION: 800 x 800 x 2200mm (WxDxH)
2 - COLOR : RAL 7032
3 - SHEET THICKNESS : 2-2.5 mm
4- PROTECTION CLASS : IP-51 (INDOOR TYPE)
5 - ALL DOOR FITTED WITH 16mm EARTH STRAP & INSULATED WITH GREEN-YELLOW COLOUR.

REV.	DESCRIPTION	DATE	DRAWER
0	AS BUILT	18.08.2018	MSC

Manufacturer: EPESOL, 31-B Garden Block, New Garden Town, Lahore, Pakistan

Contractor: Grid Solutions, A GE and Alstom joint venture

Client: NATIONAL TRANSMISSION & DISPATCH COMPANY LIMITED (NTDC-WAPDA)

Project: 220kV/132kV GIS SUBSTATION GHAZI ROAD, LAHORE

Title: 132kV BUS COUPLER RELAY PANEL (=E11+RP1) PANEL VIEW

Drawing no.: P60194-E-EBR-SC-001

Project no.	Sheet type	Sheet no.
P-60194	AD1	05a

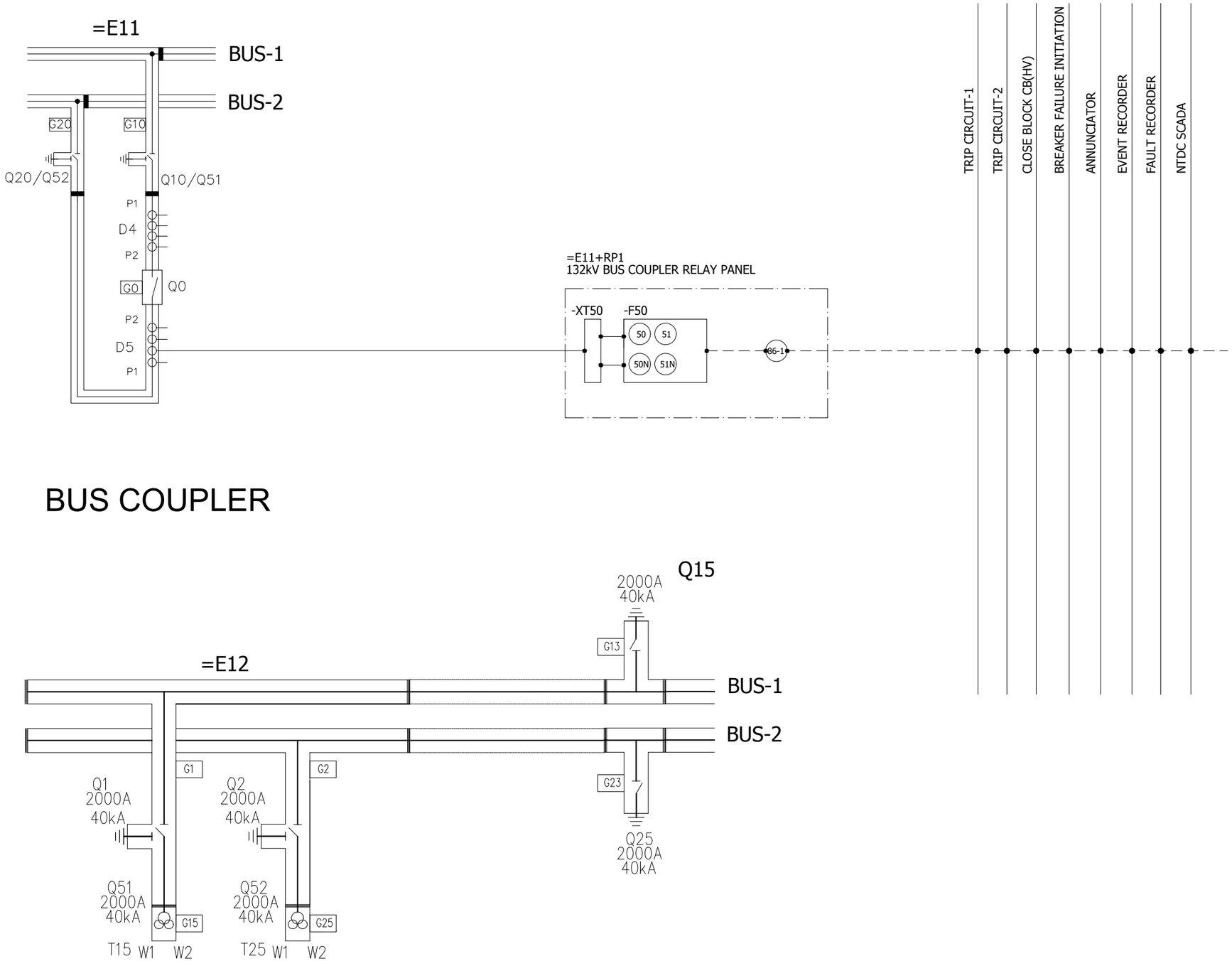

All information contained in this document is the exclusive property of GE GRID SOLUTIONS and shall not be used, copied or communicated to third parties without its prior authorization.

REV.	DESCRIPTION	DATE	DRAWER
0	AS BUILT	18.08.2018	MSC

Manufacturer: EPESOL, 71-B Garden Block, New Garden Town, Lahore, Pakistan

Contractor: Grid Solutions, A GE and Alstom joint venture

Client: NATIONAL TRANSMISSION & DISPATCH COMPANY LIMITED (NTDC-WAPDA)

Project: 220kV/132kV GIS SUBSTATION, GHAZI ROAD, LAHORE

Title: 132kV BUS COUPLER RELAY PANEL (=E11+RP1) BAY CONCEPT & PROTECTION LOGICS

Drawing no. P60194-E-EBR-SC-001

Project no.	Sheet type	Sheet no.
P-60194	AE	06

All information contained in this document is the exclusive property of GE GRID SOLUTIONS and shall not be used, copied or communicated to third parties without its prior authorization.

AC SUPPLY	CONTROL MCB	DOOR LIMIT SWITCH & PANEL LIGHT	CONTROL MCB	TEMPERATURE & HUMIDITY CONTROLLER	HEATING RESISTOR	CONTROL RCBO	POWER SOCKET	AC MONITORING AUXILIARY RELAY	AC SUPPLY
FROM =E10+RP3	-F101	-S100 & H100	-F102	-B100	-R100	-F103	-X100	-KACM	TO =E14+RP3

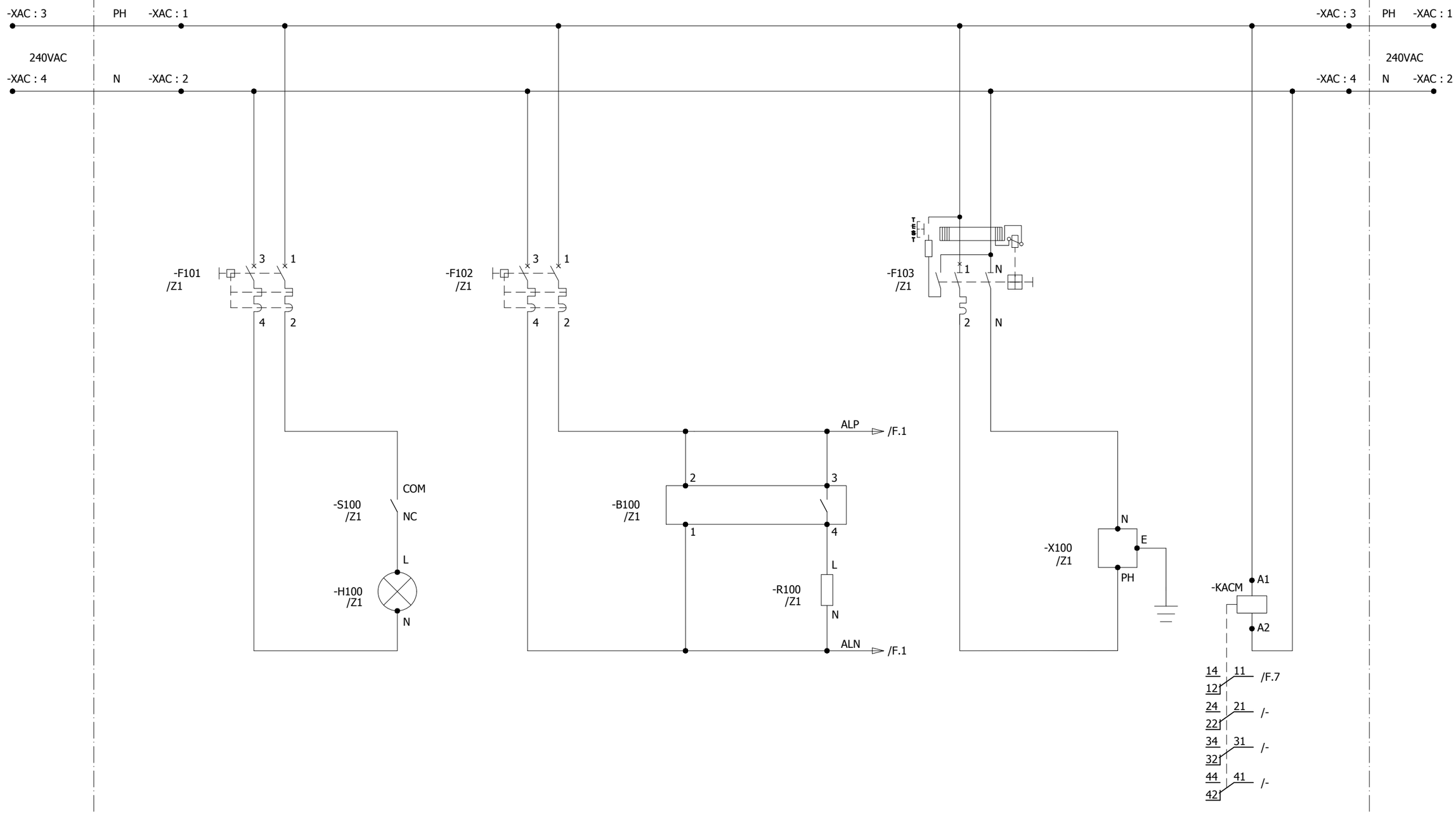

REV.	DESCRIPTION	DATE	DRAWER
0	AS BUILT	18.08.2018	MSC

Manufacturer: EPESOL, 71-B Garden Block, New Garden Town, Lahore, Pakistan

Contractor: Grid Solutions, A GE and Alstom joint venture

Client: NATIONAL TRANSMISSION & DISPATCH COMPANY LIMITED (NTDC-WAPDA)

Project: 220kV/132kV GIS SUBSTATION, GHAZI ROAD, LAHORE

Title: 132kV BUS COUPLER RELAY PANEL (=E11+RP1) AC SUPPLY DISTRIBUTION

Drawing no. P60194-E-EBR-SC-001

Project no.	Sheet type	Sheet no.
P-60194	D	07

All information contained in this document is the exclusive property of GE GRID SOLUTIONS and shall not be used, copied or communicated to third parties without its prior authorization.

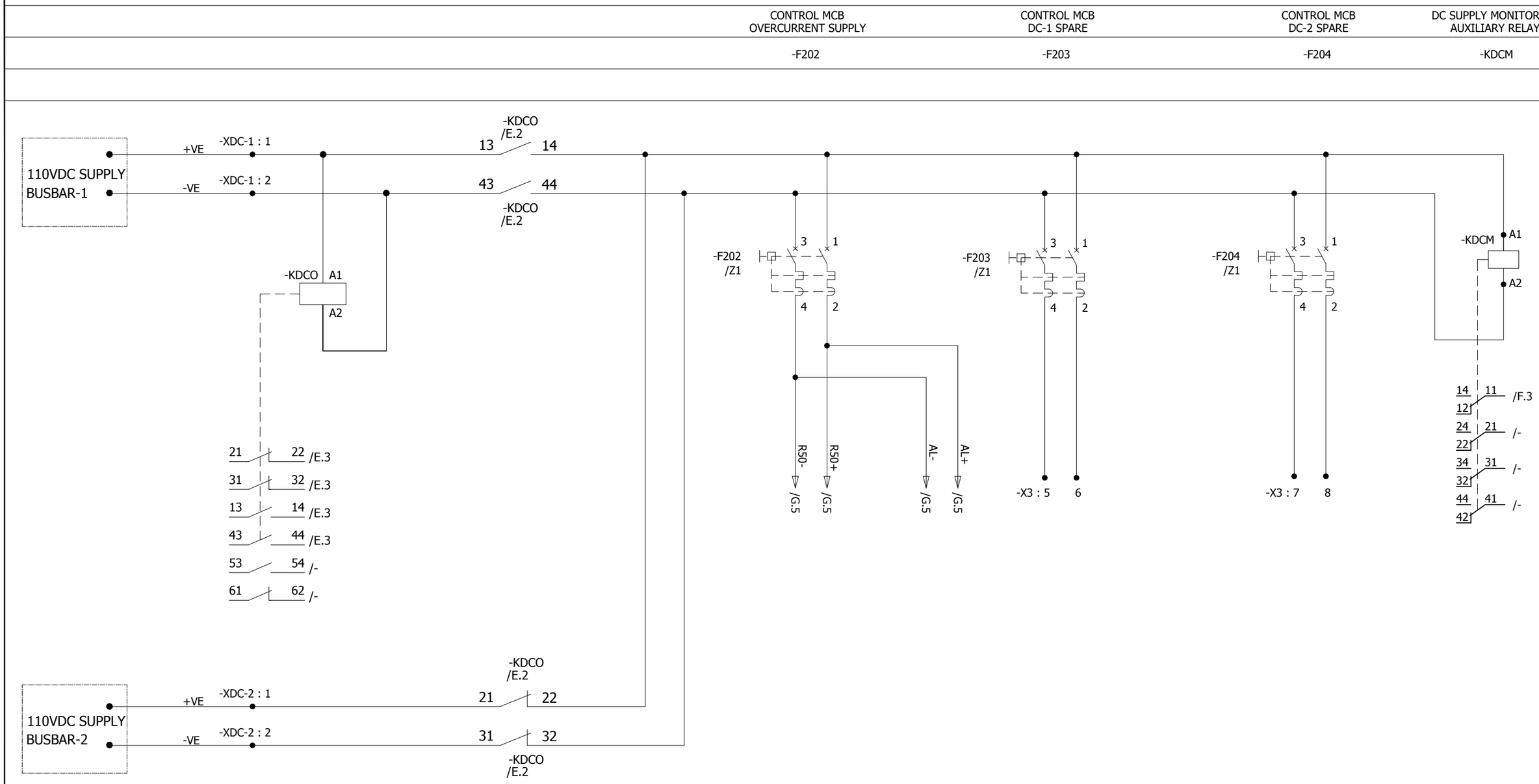

REV.	DESCRIPTION	DATE	DRAWER
0	AS BUILT	18.08.2018	MSC

Manufacturer: EPESOL, 21-B Garden Block, New Garden Town, Lahore, Pakistan

Contractor: Grid Solutions, A GE and Alstom joint venture

Client: NATIONAL TRANSMISSION & DISPATCH COMPANY LIMITED (NTDC-WAPDA)

Project: 220kV/132kV GIS SUBSTATION, GHAZI ROAD, LAHORE

Title: 132kV BUS COUPLER RELAY PANEL (=E11+RP1) DC SUPPLY DISTRIBUTION

Drawing no. P60194-E-EBR-SC-001

Project no.	Sheet type	Sheet no.
P-60194	E	08

All information contained in this document is the exclusive property of GE GRID SOLUTIONS and shall not be used, copied or communicated to third parties without its prior authorization.

110V DC CIRCUIT FAULTY

-KDC

220V AC CIRCUIT FAULTY

-KAC

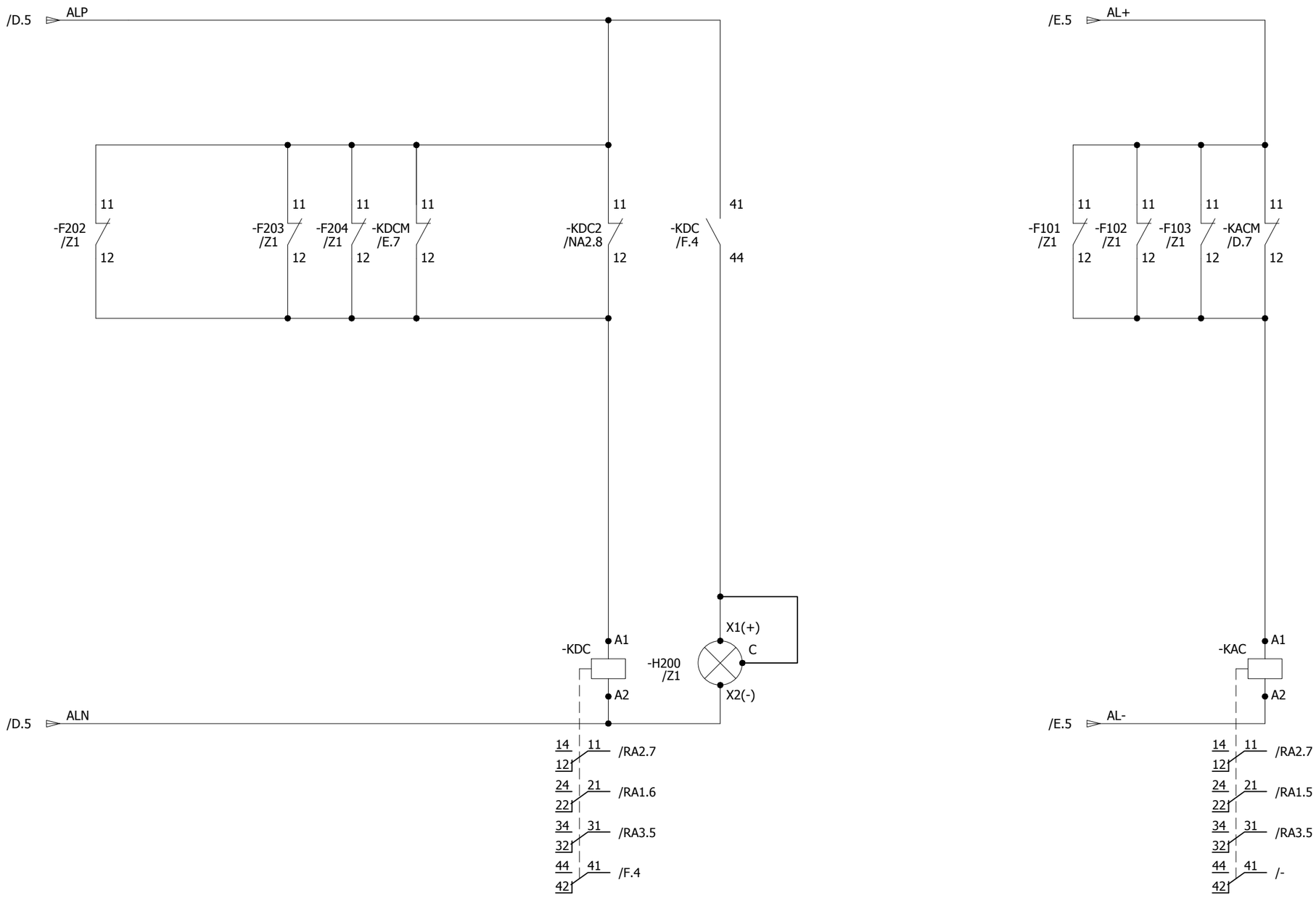

REV.	DESCRIPTION	DATE	DRAWER
0	AS BUILT	18.08.2018	MSC

Manufacturer: EPESOL, 71-B Garden Block, New Garden Town, Lahore, Pakistan

Contractor: Grid Solutions, A GE and Alstom joint venture

Client: NATIONAL TRANSMISSION & DISPATCH COMPANY LIMITED (NTDC-WAPDA)

Project: 220kV/132kV GIS SUBSTATION GHAZI ROAD, LAHORE

Title: 132kV BUS COUPLER RELAY PANEL (=E11+RP1) AC/DC SUPPLY FAILURE CIRCUIT

Drawing no. P60194-E-EBR-SC-001

Project no.	Sheet type	Sheet no.
P-60194	F	09

OVERCURRENT PROTECTION

RELAY SUPPLY

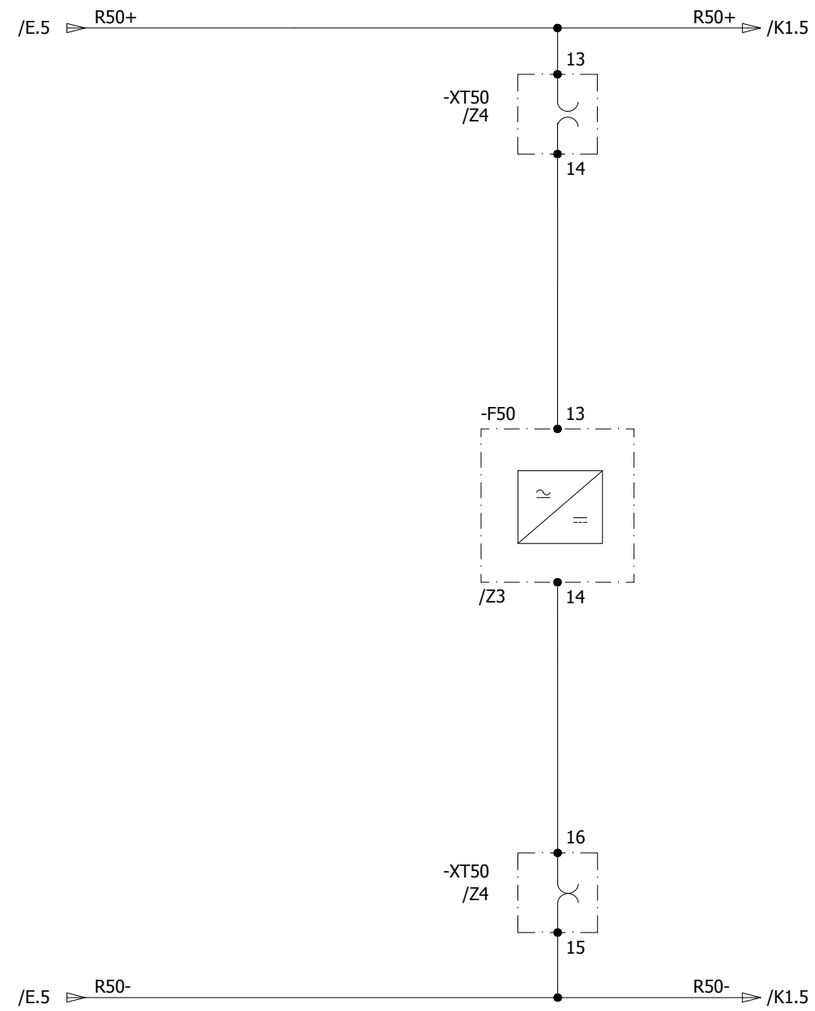

All information contained in this document is the exclusive property of GE GRID SOLUTIONS and shall not be used, copied or communicated to third parties without its prior authorization.

REV.	DESCRIPTION	DATE	DRAWER
0	AS BUILT	18.08.2018	MSC

Manufacturer: EPESOL, 71-B Garden Block, New Garden Town, Lahore, Pakistan

Contractor: Grid Solutions, A GE and Alstom joint venture

Client: NATIONAL TRANSMISSION & DISPATCH COMPANY LIMITED (NTDC-WAPDA)

Project: 220kV/132kV GIS SUBSTATION GHAZI ROAD, LAHORE

Title: 132kV BUS COUPLER RELAY PANEL (=E11+RP1) RELAY POWER SUPPLY CIRCUIT

Drawing no.: P60194-E-EBR-SC-001

Project no.	Sheet type	Sheet no.
P-60194	G	10

All information contained in this document is the exclusive property of GE GRID SOLUTIONS and shall not be used, copied or communicated to third parties without its prior authorization.

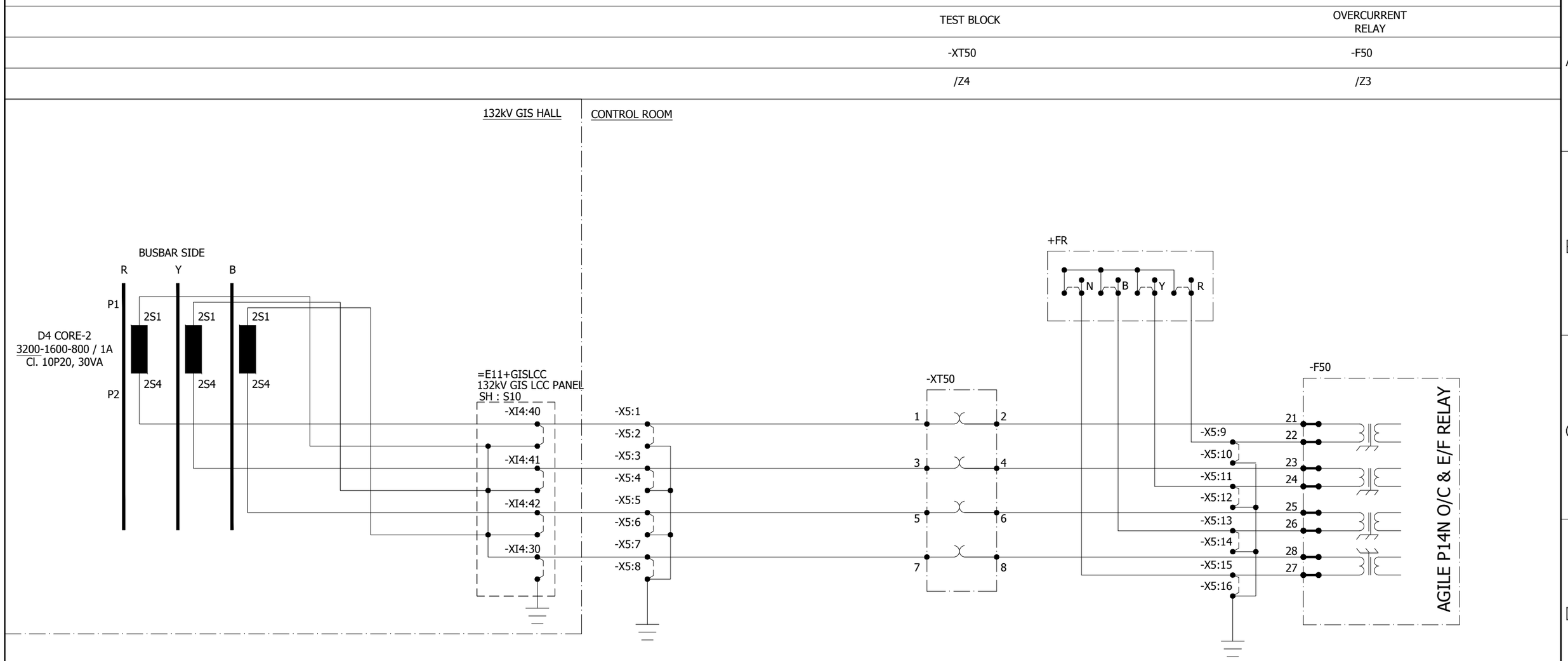

REV.	DESCRIPTION	DATE	DRAWER
0	AS BUILT	18.08.2018	MSC

Manufacturer: EPESOL, 71-B Garden Block, New Garden Town, Lahore, Pakistan

Contractor: Grid Solutions, A GE and Alstom joint venture

Client: NATIONAL TRANSMISSION & DISPATCH COMPANY LIMITED (NTDC-WAPDA)

Project: 220kV/132kV GIS SUBSTATION, GHAZI ROAD, LAHORE

Title: 132kV BUS COUPLER RELAY PANEL (=E11+RP1) O/C & E/F CT INPUTS

Drawing no.: P60194-E-EBR-SC-001

Project no.	Sheet type	Sheet no.
P-60194	H2	11

All information contained in this document is the exclusive property of GE GRID SOLUTIONS and shall not be used, copied or communicated to third parties without its prior authorization.

O/C & E/F PROTECTION TRIP TRIP RELAY RESET

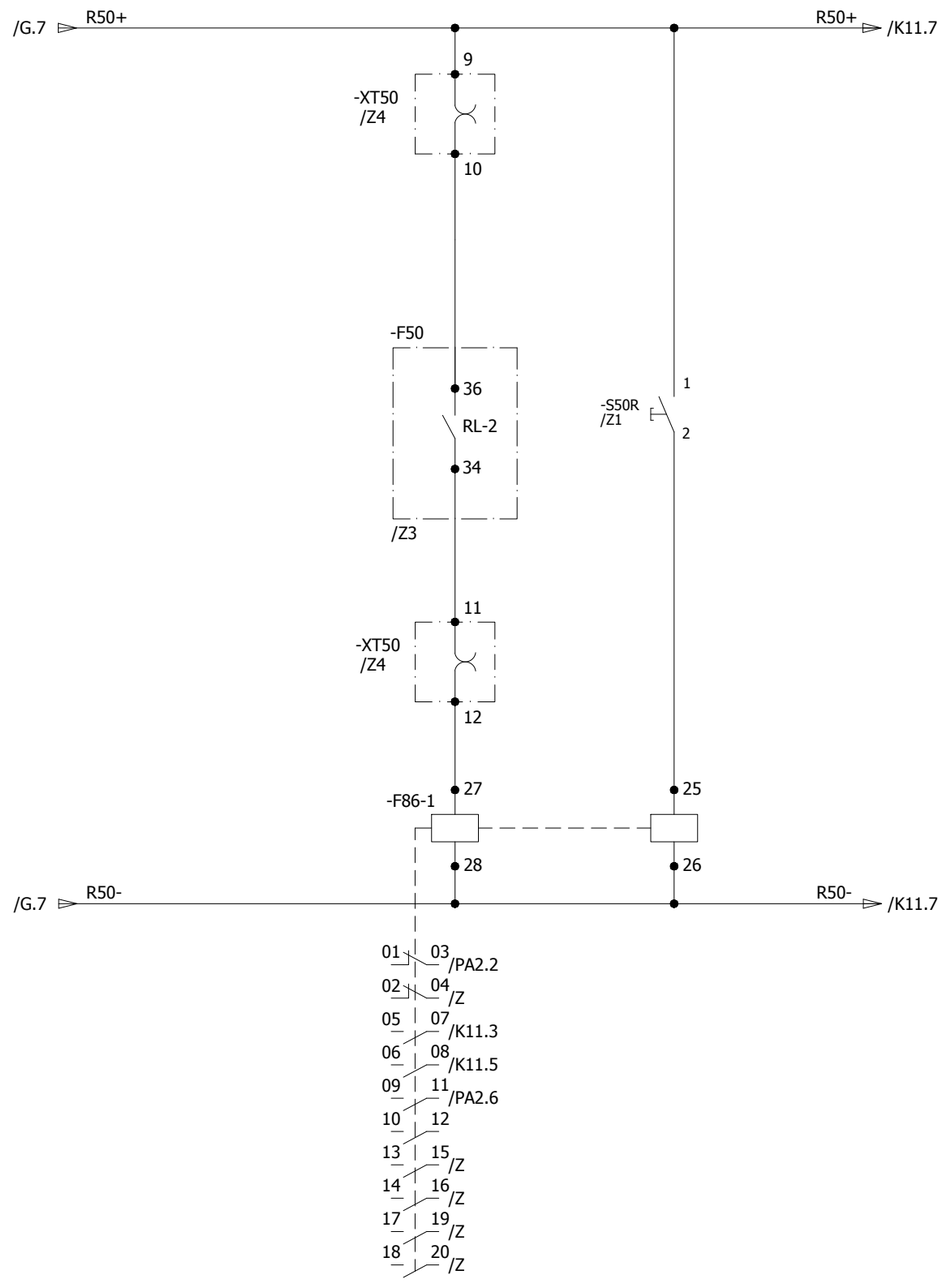

REV.	DESCRIPTION	DATE	DRAWER
0	AS BUILT	18.08.2018	MSC

Manufacturer: EPESOL, 71-B Garden Block, New Garden Town, Lahore, Pakistan

Contractor: Grid Solutions, A GE and Alstom joint venture

Client: NATIONAL TRANSMISSION & DISPATCH COMPANY LIMITED (NTDC-WAPDA)

Project: 220kV/132kV GIS SUBSTATION GHAZI ROAD, LAHORE

Title: 132kV BUS COUPLER RELAY PANEL (=E11+RP1) PROTECTION TRIPS

Drawing no. P60194-E-EBR-SC-001

Project no.	Sheet type	Sheet no.
P-60194	K1	12

All information contained in this document is the exclusive property of GE GRID SOLUTIONS and shall not be used, copied or communicated to third parties without its prior authorization.

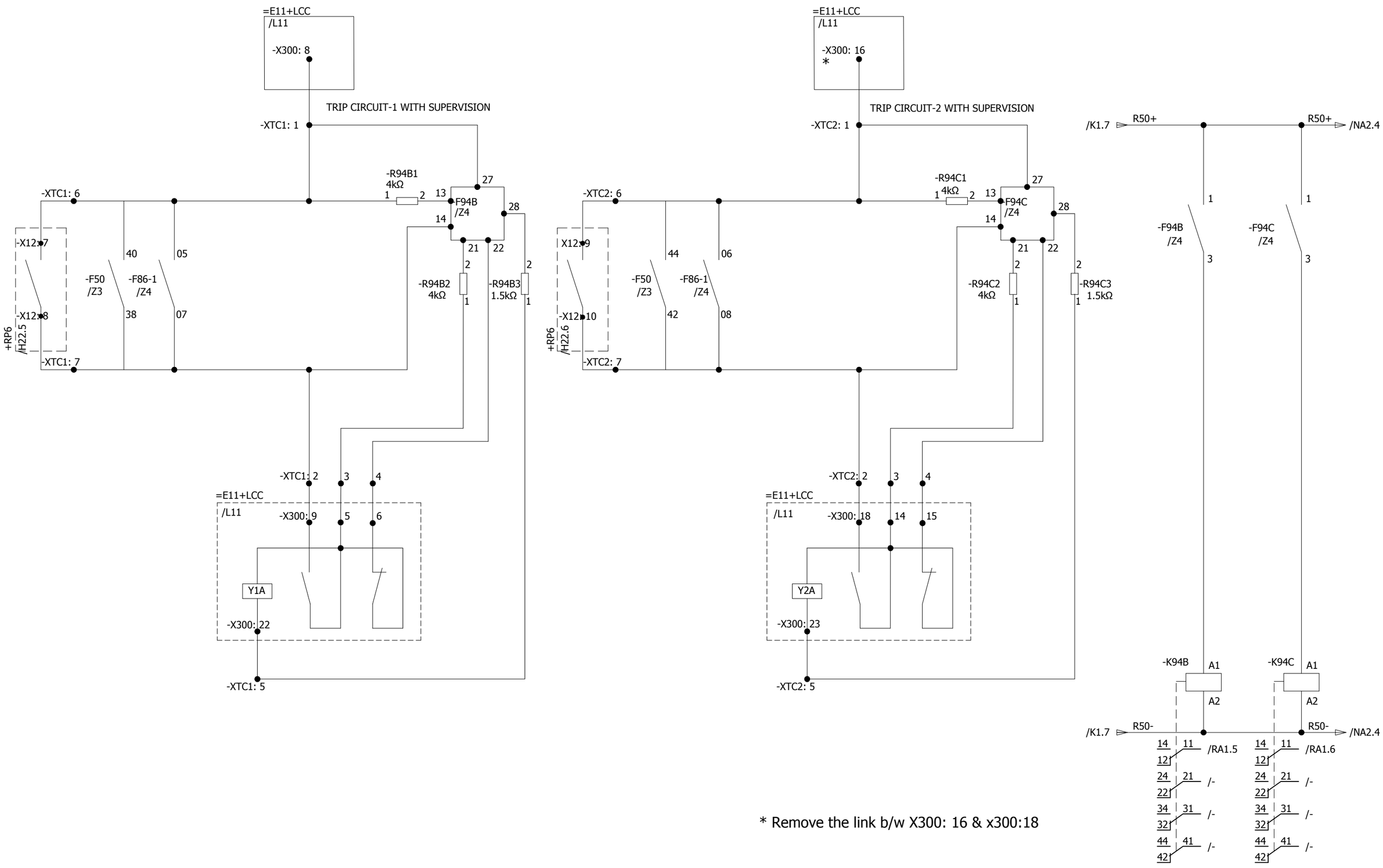

* Remove the link b/w X300: 16 & x300:18

REV.	DESCRIPTION	DATE	DRAWER
0	AS BUILT	18.08.2018	MSC

Manufacturer: EPESOL, 71-B Garden Block, New Garden Town, Lahore, Pakistan

Contractor: Grid Solutions, A GE and Alstom joint venture

Client: NATIONAL TRANSMISSION & DISPATCH COMPANY LIMITED (NTDC-WAPDA)

Project: 220kV/132kV GIS SUBSTATION GHAZI ROAD, LAHORE

Title: 132kV BUS COUPLER RELAY PANEL (=E11+RP1) TRIP CIRCUIT SUPERVISION CIRCUIT

Drawing no. P60194-E-EBR-SC-001

Project no.	Sheet type	Sheet no.
P-60194	K11	13

All information contained in this document is the exclusive property of GE GRID SOLUTIONS and shall not be used, copied or communicated to third parties without its prior authorization.

O/C & E/F RELAY ALARMS		R50+ DC SUPPLY MONITORING
O/C & E/F TRIP	PROTECTION FAULTY	+KDC2
/Z3		

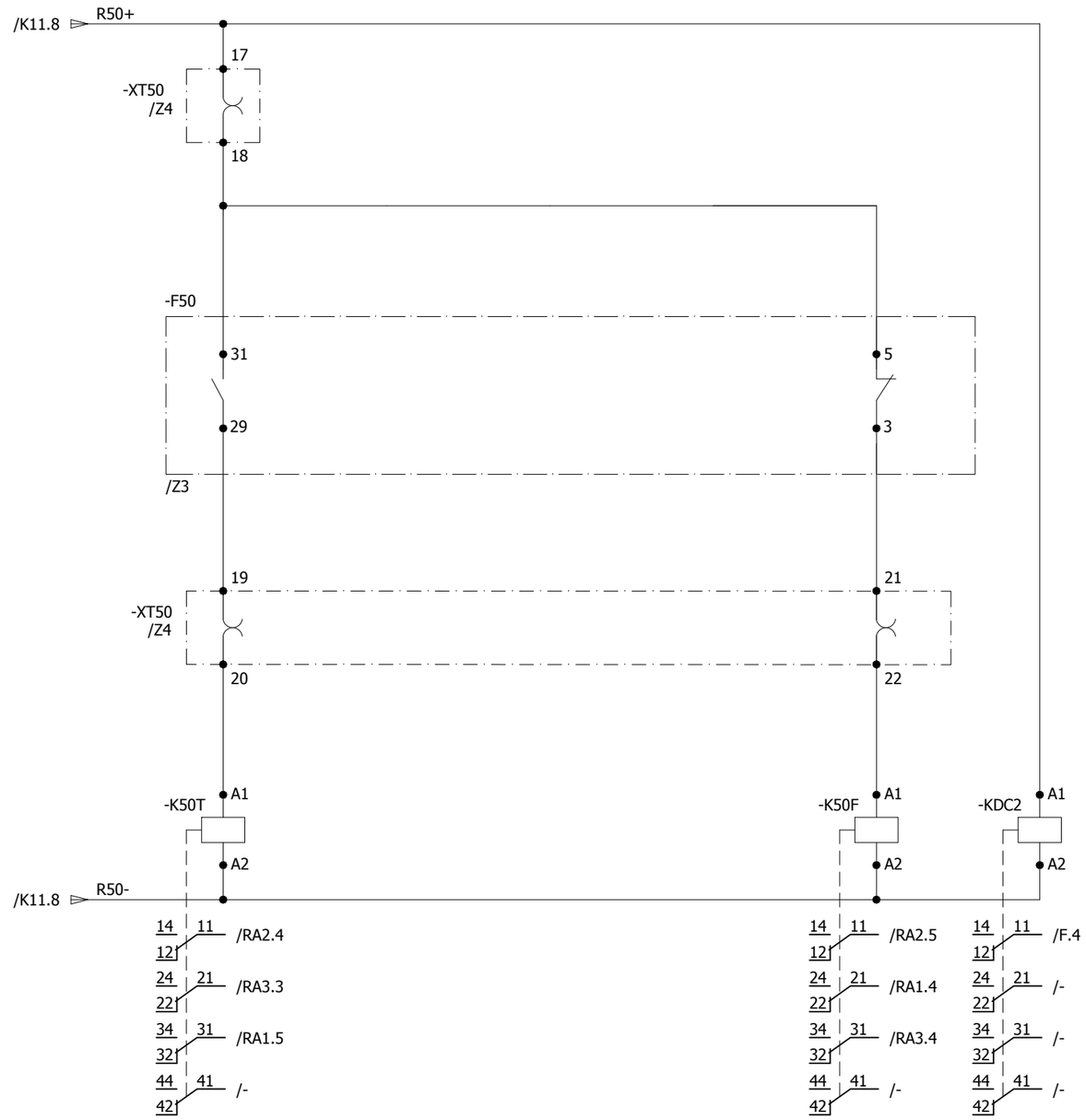

REV.	DESCRIPTION	DATE	DRAWER
0	AS BUILT	18.08.2018	MSC

Manufacturer: EPESOL, 71-B Garden Block, New Garden Town, Lahore, Pakistan

Contractor: Grid Solutions, A GE and Alstom joint venture

Client: NATIONAL TRANSMISSION & DISPATCH COMPANY LIMITED (NTDC-WAPDA)

Project: 220kV/132kV GIS SUBSTATION GHAZI ROAD, LAHORE

Title: 132kV BUS COUPLER RELAY PANEL (=E11+RP1) SYSTEM ALARMS

Drawing no. P60194-E-EBR-SC-001

Project no.	Sheet type	Sheet no.
P-60194	NA2	14

All information contained in this document is the exclusive property of GE GRID SOLUTIONS and shall not be used, copied or communicated to third parties without its prior authorization.

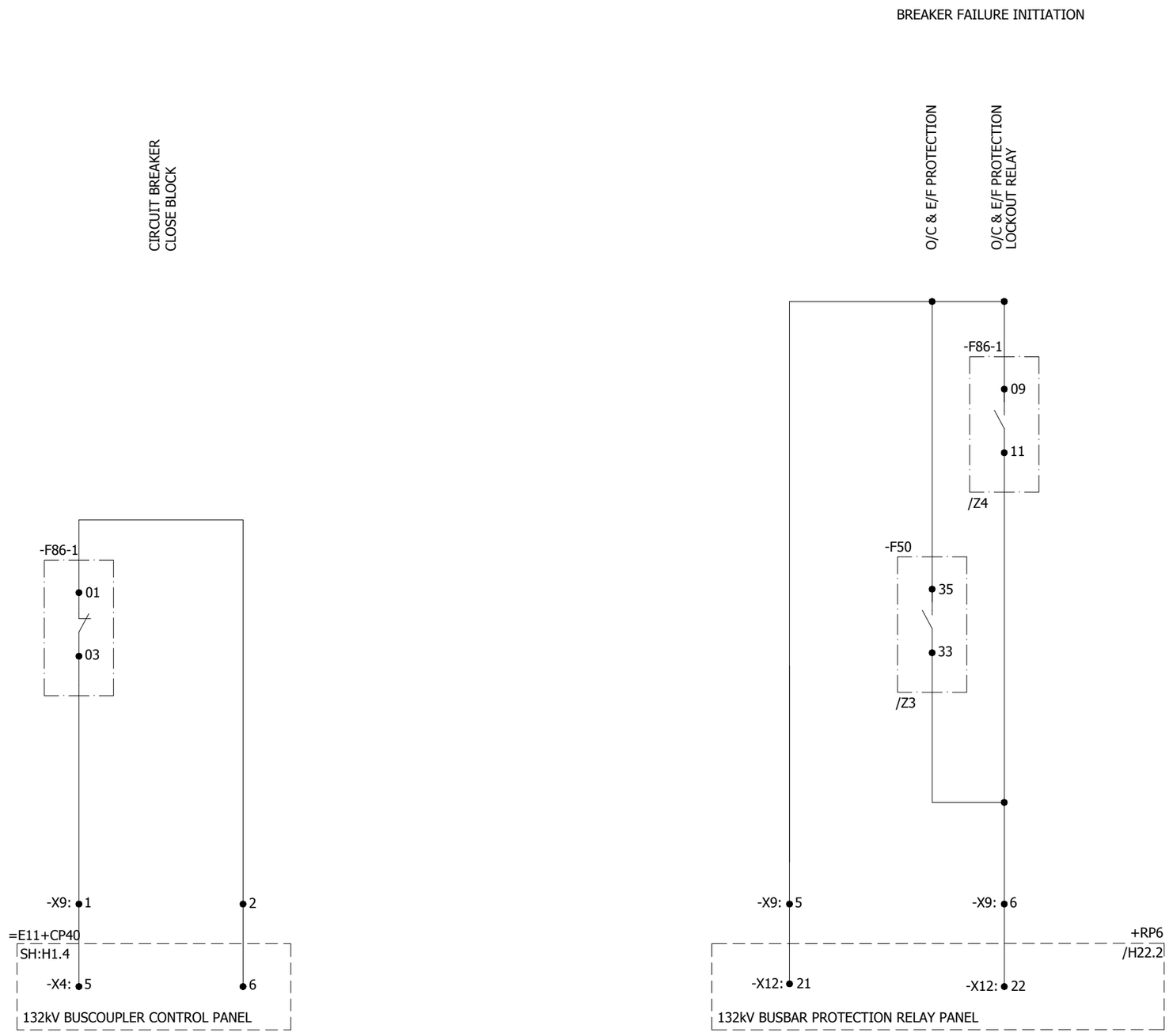

REV.	DESCRIPTION	DATE	DRAWER
0	AS BUILT	18.08.2018	MSC

Manufacturer: EPESOL, 71-B Garden Block, New Garden Town, Lahore, Pakistan

Contractor: Grid Solutions, A GE and Alstom joint venture

Client: NATIONAL TRANSMISSION & DISPATCH COMPANY LIMITED (NTDC-WAPDA)

Project: 220kV/132kV GIS SUBSTATION GHAZI ROAD, LAHORE

Title: 132kV BUS COUPLER RELAY PANEL (=E11+RP1) PROTECTION INTER-CIRCUITS

Drawing no. P60194-E-EBR-SC-001

Project no.	Sheet type	Sheet no.
P-60194	PA2	15

All information contained in this document is the exclusive property of GE GRID SOLUTIONS and shall not be used, copied or communicated to third parties without its prior authorization.

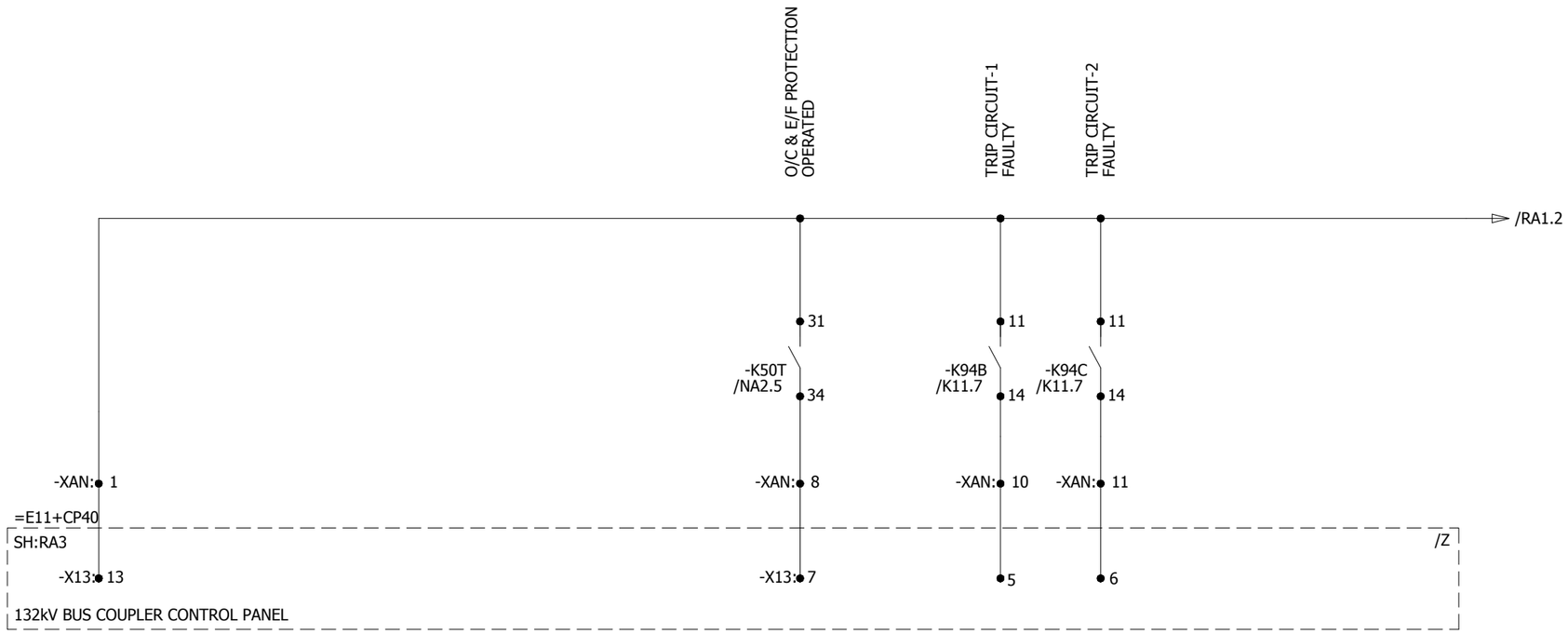

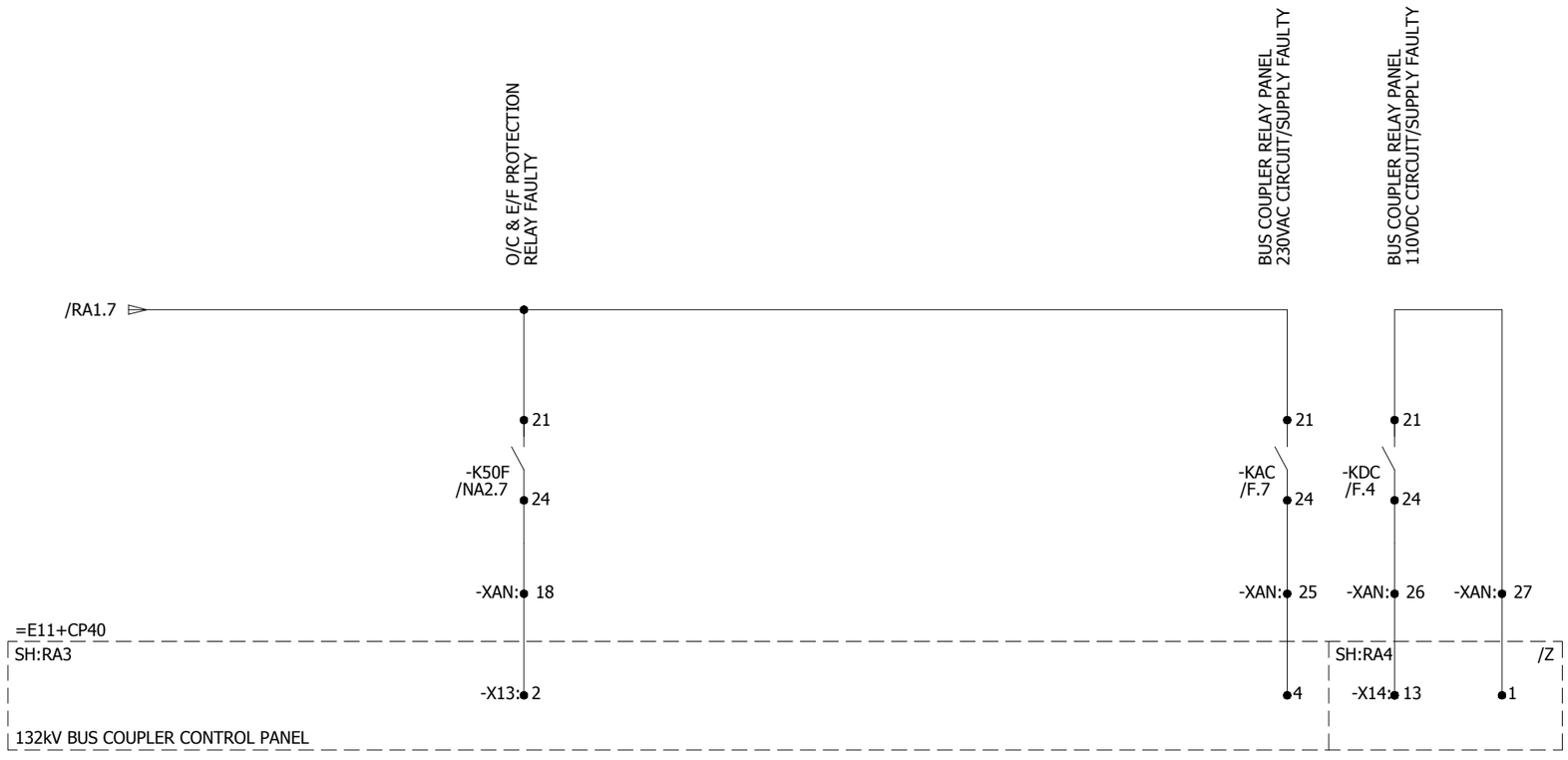

REV.	DESCRIPTION	DATE	DRAWER
0	AS BUILT	18.08.2018	MSC

Manufacturer: EPESOL, 71-B Garden Block, New Garden Town, Lahore, Pakistan

Contractor: Grid Solutions, A GE and Alstom joint venture

Client: NATIONAL TRANSMISSION & DISPATCH COMPANY LIMITED (NTDC-WAPDA)

Project: 220kV/132kV GIS SUBSTATION GHAZI ROAD, LAHORE

Title: 132kV BUS COUPLER RELAY PANEL (=E11+RP1) ANNUNCIATION CIRCUIT

Drawing no. P60194-E-EBR-SC-001

Project no.	Sheet type	Sheet no.
P-60194	RA1	16

All information contained in this document is the exclusive property of GE GRID SOLUTIONS and shall not be used, copied or communicated to third parties without its prior authorization.

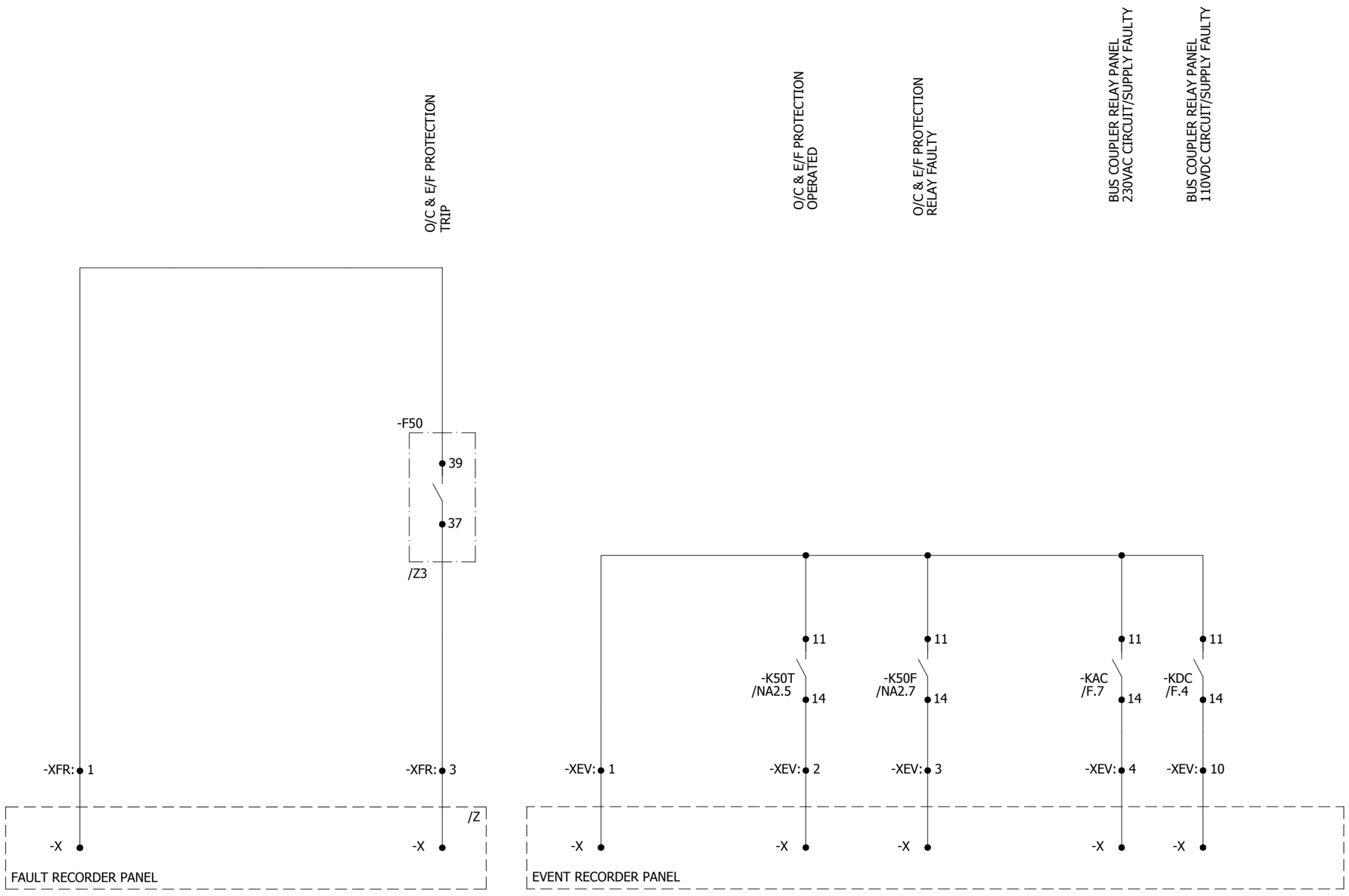

REV.	DESCRIPTION	DATE	DRAWER
0	AS BUILT	18.08.2018	MSC

Manufacturer: EPESOL, 71-B Garden Block, New Garden Town, Lahore, Pakistan

Contractor: Grid Solutions, A GE and Alstom joint venture

Client: NATIONAL TRANSMISSION & DISPATCH COMPANY LIMITED (NTDC-WAPDA)

Project: 220kV/132kV GIS SUBSTATION GHAZI ROAD, LAHORE

Title: 132kV BUS COUPLER RELAY PANEL (=E11+RP1) EVENT & FAULT RECORDER CIRCUITS

Drawing no. P60194-E-EBR-SC-001

Project no.	Sheet type	Sheet no.
P-60194	RA2	17

All information contained in this document is the exclusive property of GE GRID SOLUTIONS and shall not be used, copied or communicated to third parties without its prior authorization.

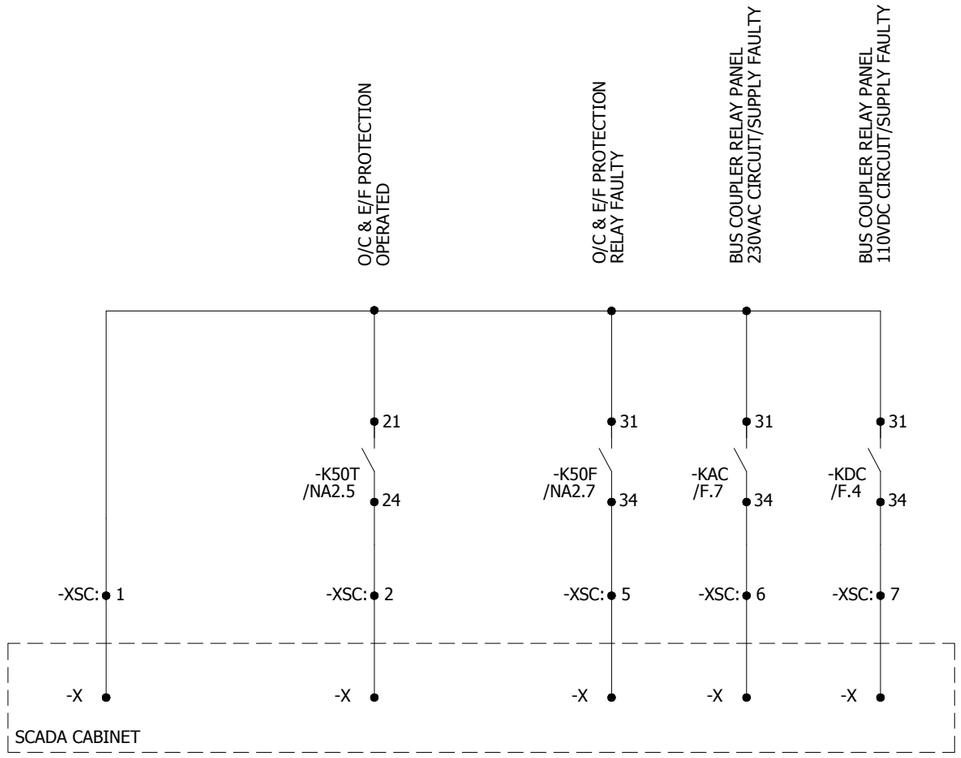

0	AS BUILT	18.08.2018	MSC	Manufacturer	Contractor	Client	Project	Title	Drawing no.		
				EPESOL 71-B Garden Block, New Garden Town, Lahore, Pakistan	Grid Solutions A GE and Alstom joint venture	NATIONAL TRANSMISSION & DISPATCH COMPANY LIMITED (NTDC-WAPDA)	220kV/132kV GIS SUBSTATION GHAZI ROAD, LAHORE	132kV BUS COUPLER RELAY PANEL (=E11+RP1) SCADA CIRCUIT	P60194-E-EBR-SC-001		
									Project no. P-60194	Sheet type RA3	Sheet no. 18
REV.	DESCRIPTION	DATE	DRAWER								

All information contained in this document is the exclusive property of GE GRID SOLUTIONS and shall not be used, copied or communicated to third parties without its prior authorization.

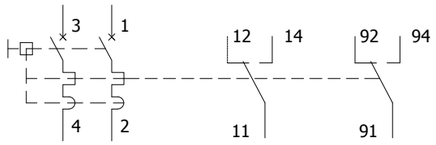

-F101	D.2	F.6	
-F102	D.4	F.6	
-F103	D.6	F.7	
-F202	E.5	F.2	
-F203	E.6	F.2	
-F204	E.7	F.3	

-S100	D.3

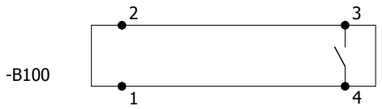

-B100	D.4	D.5

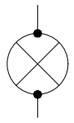

-H100	D.3
-H200	F.4

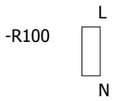

-R100	D.5

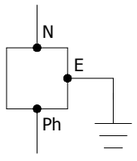

-X100	D.7

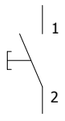

-S50R	K1.7

REV.	DESCRIPTION	DATE	DRAWER
0	AS BUILT	18.08.2018	MSC

Manufacturer: EPESOL, 71-B Garden Block, New Garden Town, Lahore, Pakistan

Contractor: Grid Solutions, A GE and Alstom joint venture

Client: NATIONAL TRANSMISSION & DISPATCH COMPANY LIMITED (NTDC-WAPDA)

Project: 220kV/132kV GIS SUBSTATION GHAZI ROAD, LAHORE

Title: 132kV BUS COUPLER RELAY PANEL (=E11+RP1) COMPONENT DIAGRAM

Drawing no. P60194-E-EBR-SC-001

Project no.	Sheet type	Sheet no.
P-60194	Z1	19

All information contained in this document is the exclusive property of GE GRID SOLUTIONS and shall not be used, copied or communicated to third parties without its prior authorization.

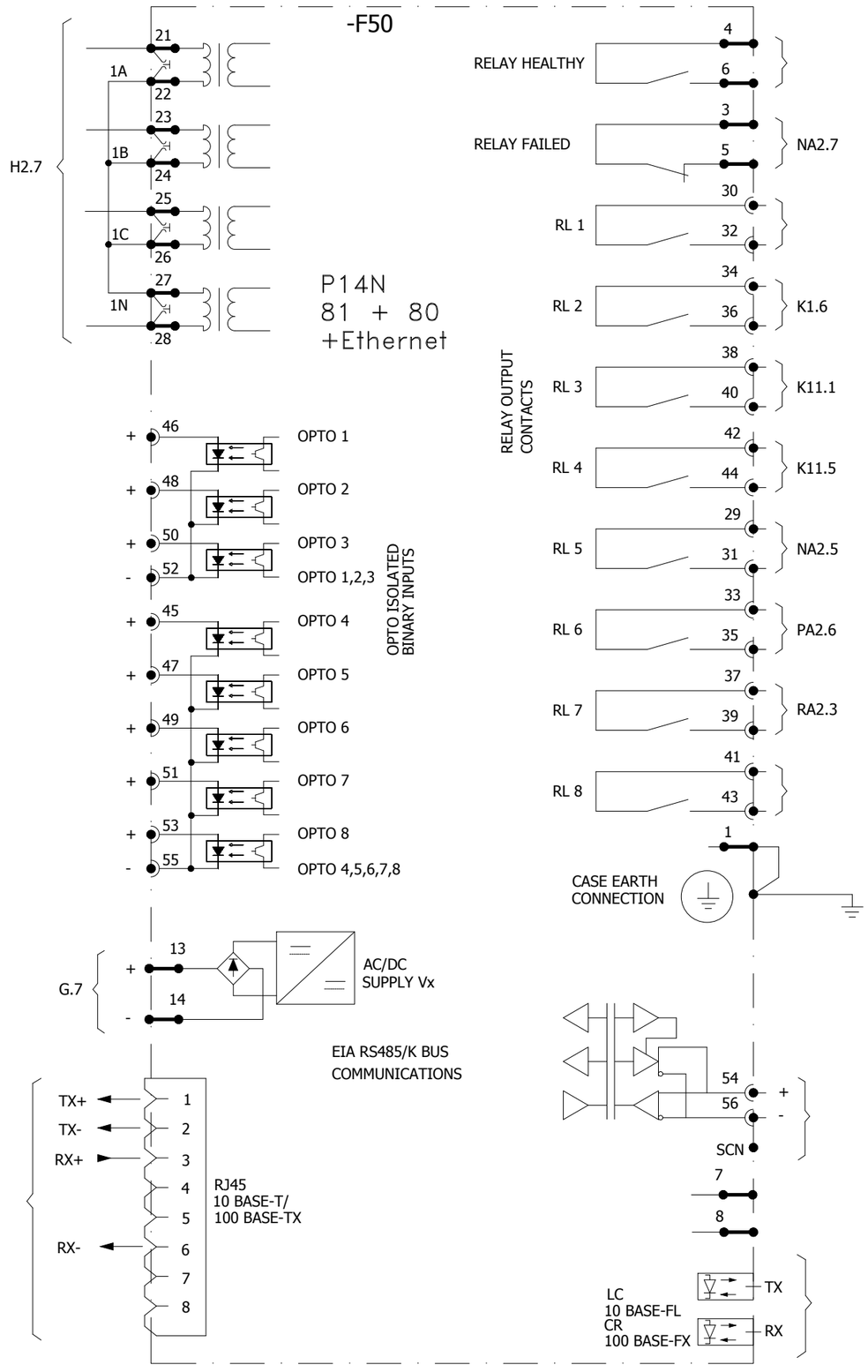

REV.	DESCRIPTION	DATE	DRAWER
0	AS BUILT	18.08.2018	MSC

Manufacturer: EPESOL, 71-B Garden Block, New Garden Town, Lahore, Pakistan

Contractor: Grid Solutions, A GE and Alstom joint venture

Client: NATIONAL TRANSMISSION & DISPATCH COMPANY LIMITED (NTDC-WAPDA)

Project: 220kV/132kV GIS SUBSTATION GHAZI ROAD, LAHORE

Title: 132kV BUS COUPLER RELAY PANEL (=E11+RP1) COMPONENT DIAGRAM

Drawing no.: P60194-E-EBR-SC-001

Project no.	Sheet type	Sheet no.
P-60194	Z3	20

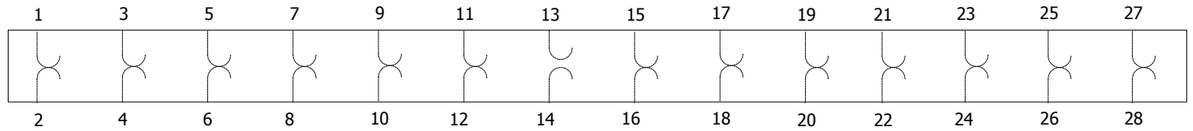

-XT50	H2.6	K1.6	G.7	NA2.5	NA2.7	

-F94C

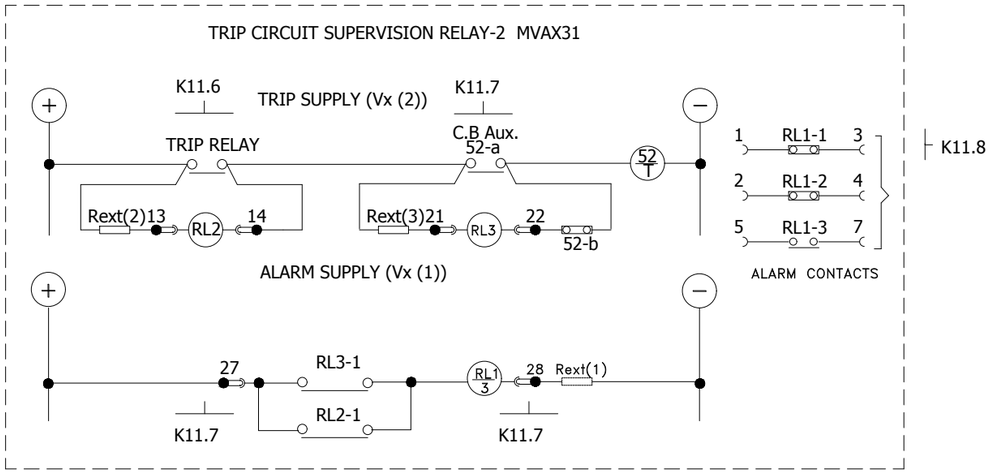

-94B1	K11.3
-94B2	K11.3
-94B3	K11.4
-94C1	K11.6
-94C2	K11.6
-94C3	K11.7

-F94B

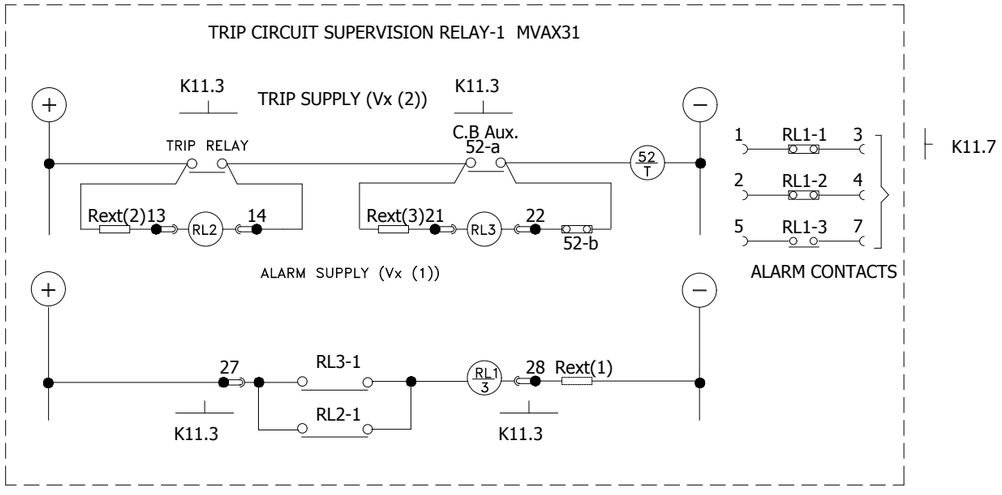

All information contained in this document is the exclusive property of GE GRID SOLUTIONS and shall not be used, copied or communicated to third parties without its prior authorization.

REV.	DESCRIPTION	DATE	DRAWER
0	AS BUILT	18.08.2018	MSC

Manufacturer: EPESOL, 71-B Garden Block, New Garden Town, Lahore, Pakistan

Contractor: Grid Solutions, A GE and Alstom joint venture

Client: NATIONAL TRANSMISSION & DISPATCH COMPANY LIMITED (NTDC-WAPDA)

Project: 220kV/132kV GIS SUBSTATION GHAZI ROAD, LAHORE

Title: 132kV BUS COUPLER RELAY PANEL (=E11+RP1) COMPONENT DIAGRAM

Drawing no. P60194-E-EBR-SC-001

Project no.	Sheet type	Sheet no.
P-60194	Z4	21