Lecture#06

Chapter 03

3. Wind Generators and Modeling

3.1 Introduction

3.2 Reference Frame Transformation

3.2.1 *abc/dq* Reference Frame Transformation

3.2.2 *abc/αβ* Reference Frame Transformation

3.3 Induction Generator Models

3.3.1 Construction

3.3.2 Space Vector Model

3.3.3 *dq* Reference Frame Model

3.3.4 Simulation Model

3.3.5 Induction Generator Transient Characteristics

3.3.6 Steady-state Equivalent Circuit

3.4 Synchronous Generators

3.4.1 Construction

3.4.2 Dynamic Model of SG

3.4.3 Steady-State Equivalent Circuits

What we can extract from this chapter?

- Construction & operating principle of induction & synchronous generators .
- Case studies to illustrate important concepts & performance of generators.
- Wind dynamic & steady-state generator models with derivation of equations.
- Numericals

Lecture#06(Contents)

3.1 Introduction

3.2 Reference Frame Transformation

3.2.1 *abc/dq* Reference Frame Transformation

3.2.2 *abc/αβ* Reference Frame Transformation

3.3 Induction Generator Models

3.3.1 Construction

3.3.2 Space Vector Model

3.1 Introduction

Due to the fastest growth of wind power conversion technology.

- we have a variety of electric generators.

Most common electric generators in large Wind Energy Conversion Systems (WECS):

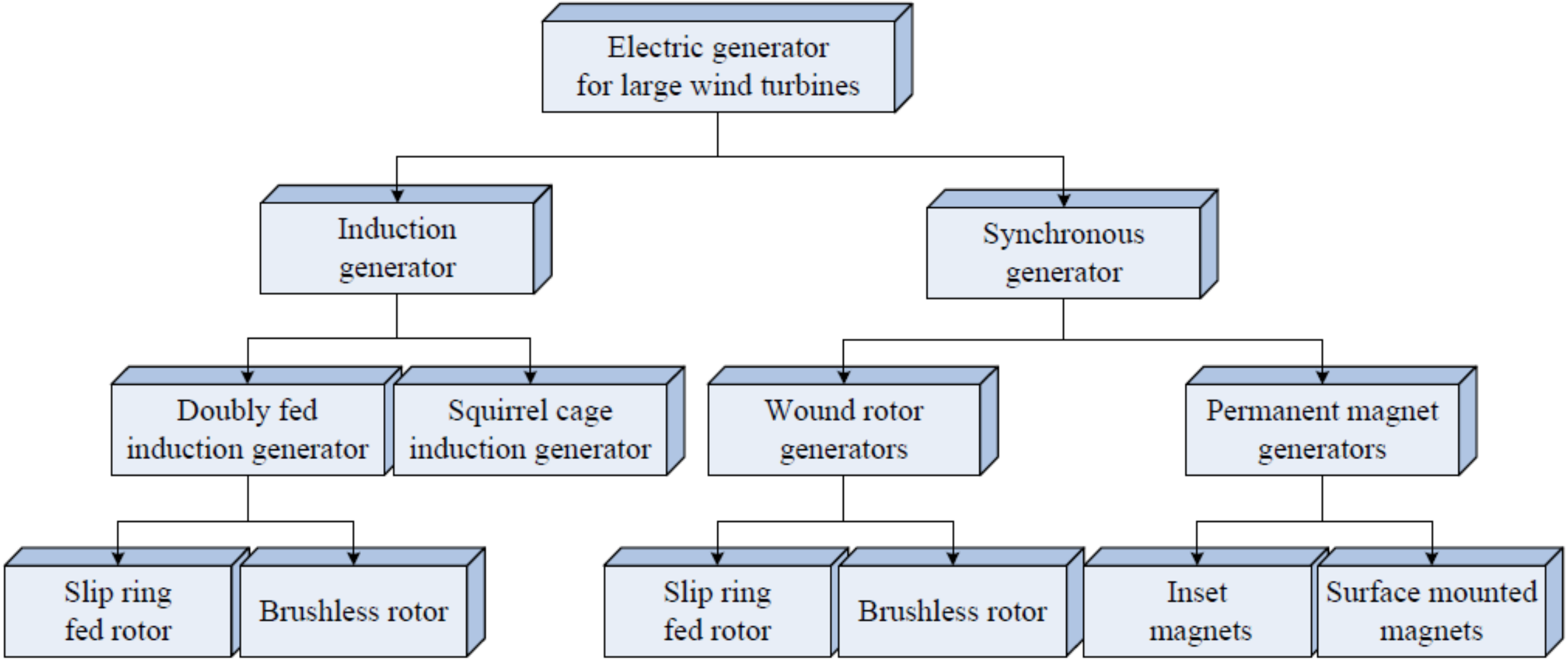

Construction & operating principle, divide wind generators into 02 main groups: Induction Generator (IG) & Synchronous Generator (SG).

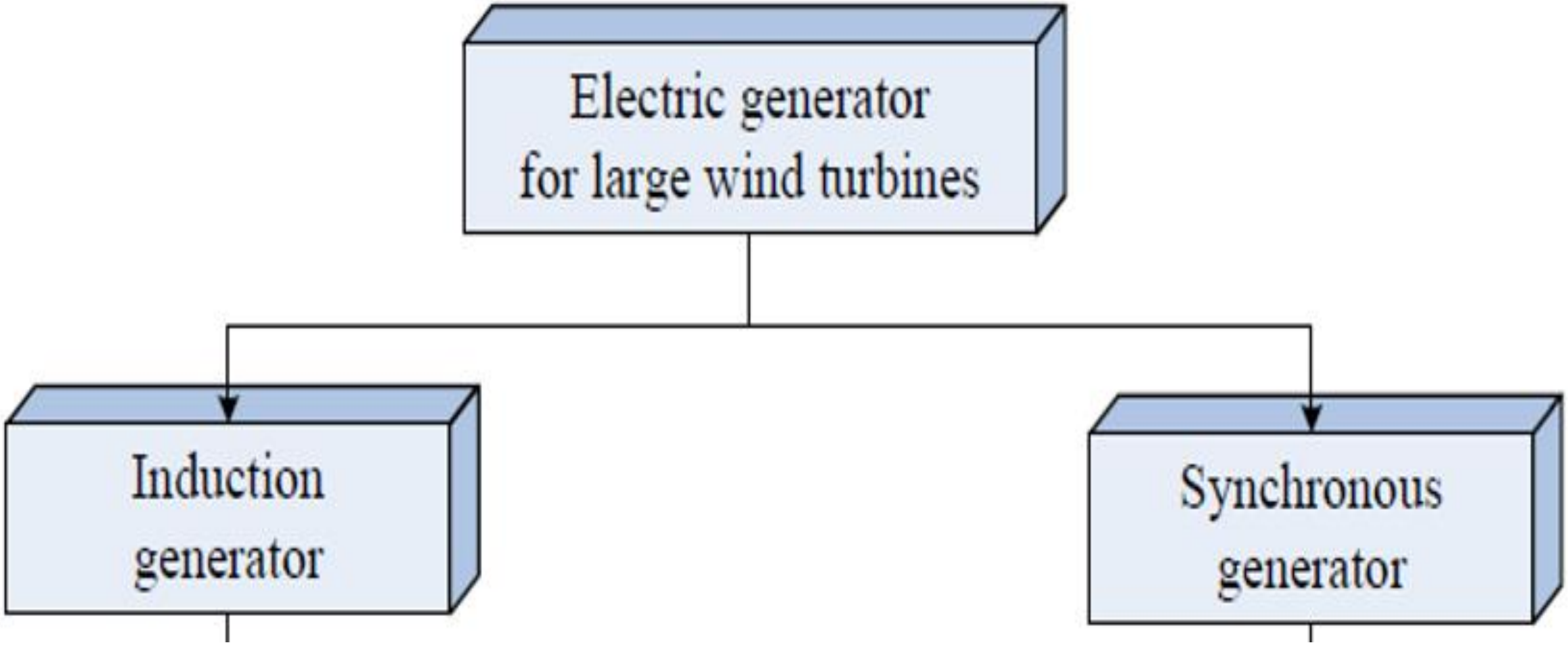

Doubly-Fed Induction Generator (DFIG) **is the most commonly used generators** in wind energy industry

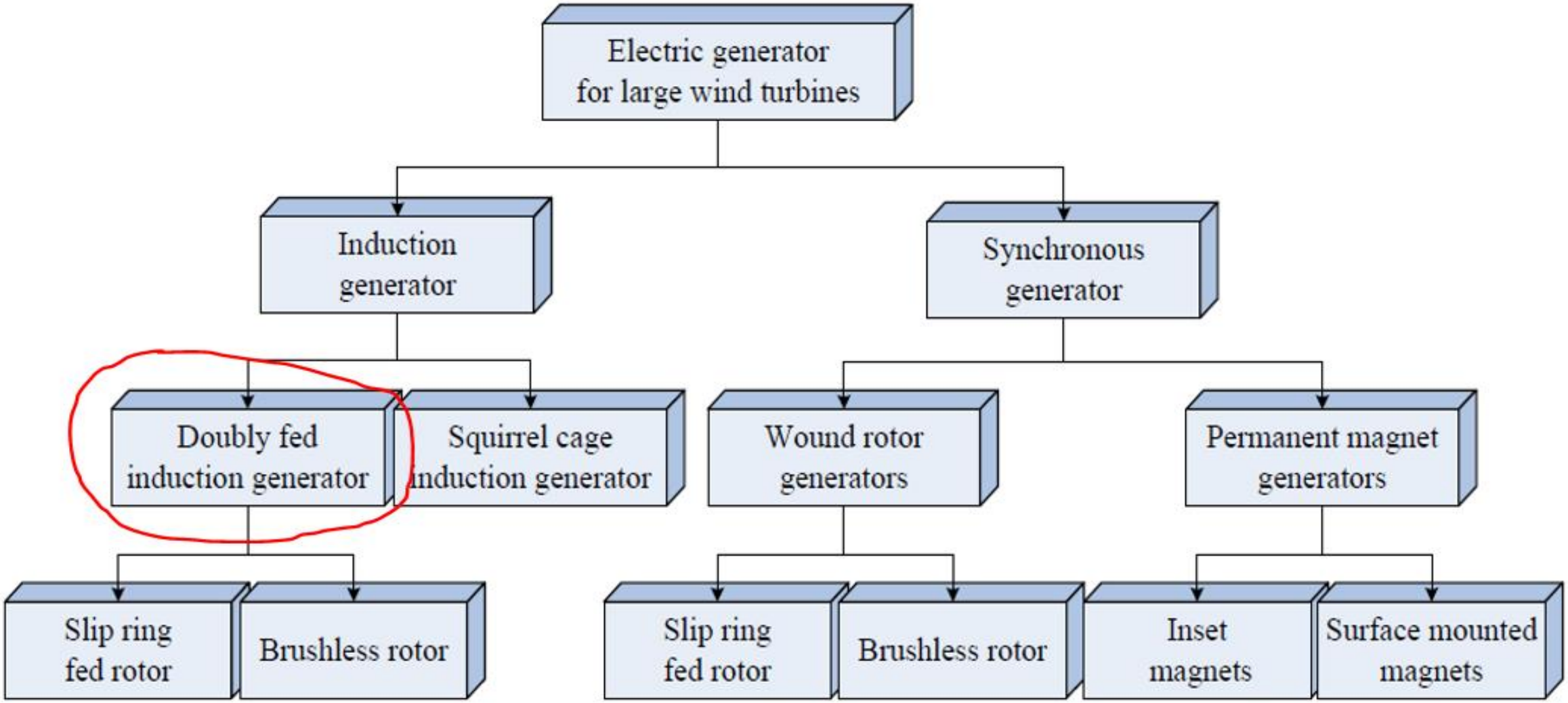

Other name of Doubly-Fed Induction Generator (DFIG)?

- Other name of Doubly-Fed Induction Generator (DFIG) is **the wound rotor induction generator**

Rotor of a large 3-blade wind turbine operates in a speed range _____rpm?

Wound Rotor Synchronous Generator (WRSG) is also found in practical WECS **with high number of poles(72) operating at low rotor speeds(6-21.5rpm)**.

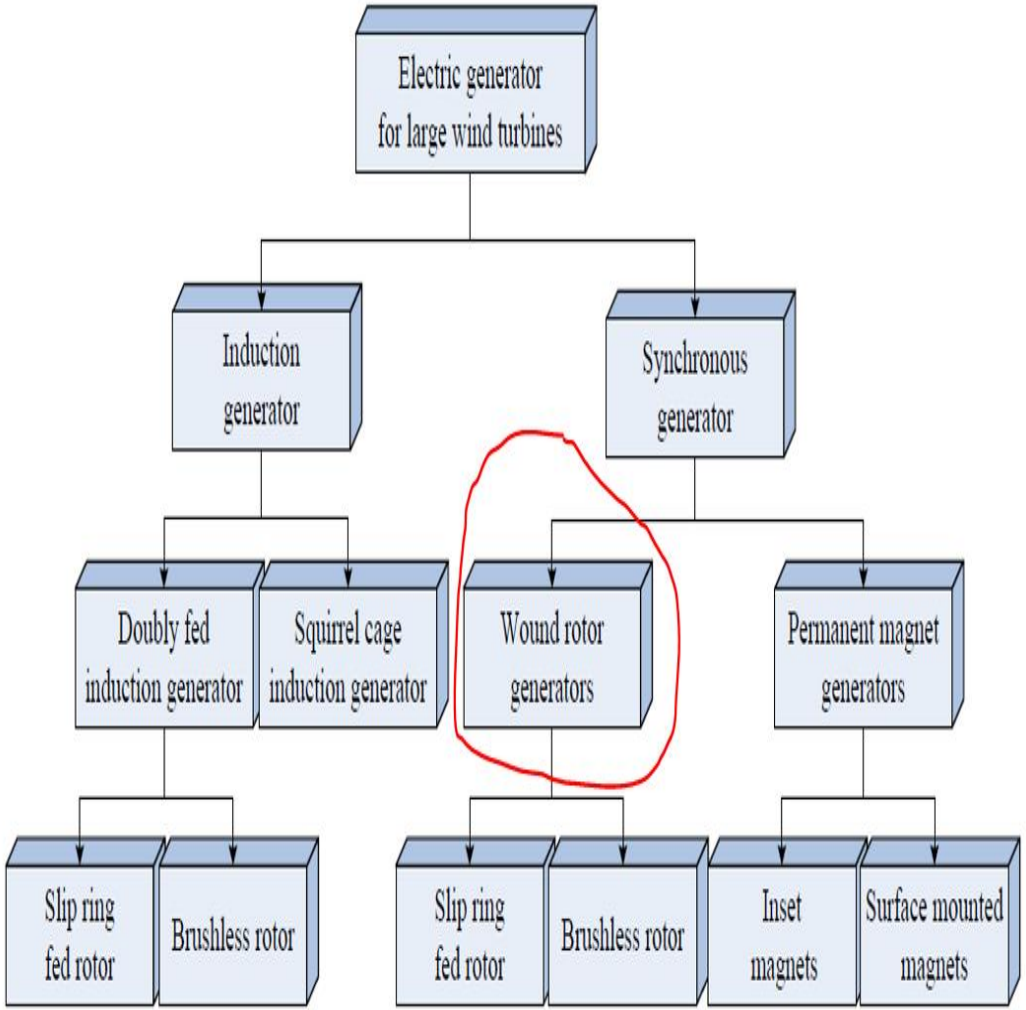

Generator Type	Doubly Fed Induction Generator (DFIG)	Squirrel Cage Induction Generator (SCIG)	Wound Rotor Synchronous Generator (WRSG)	Permanent Magnet Synchronous Generator (PMSG)	
Rated Voltage (line-to-line)	690V	690V	400V	700V	3000V
Rated Power	2MW	2.3MW	2.3MW	2.75MW	5.32MW
Rated Stator Frequency	50Hz	50Hz	na	na	19.6Hz
Speed Range	900 – 1900rpm	600 – 1600rpm	6 – 21.5rpm	6 – 18rpm	58.6 – 146.9rpm
Number of Poles	4	4	72	120	28
Brand/Model	Gamesa G90	Siemens SWT-2.3-101	Enercon E-70	Avantis AV928	Multibrid M5000

Squirrel Cage Induction Generator (SCIG) is also widely employed in wind energy systems.

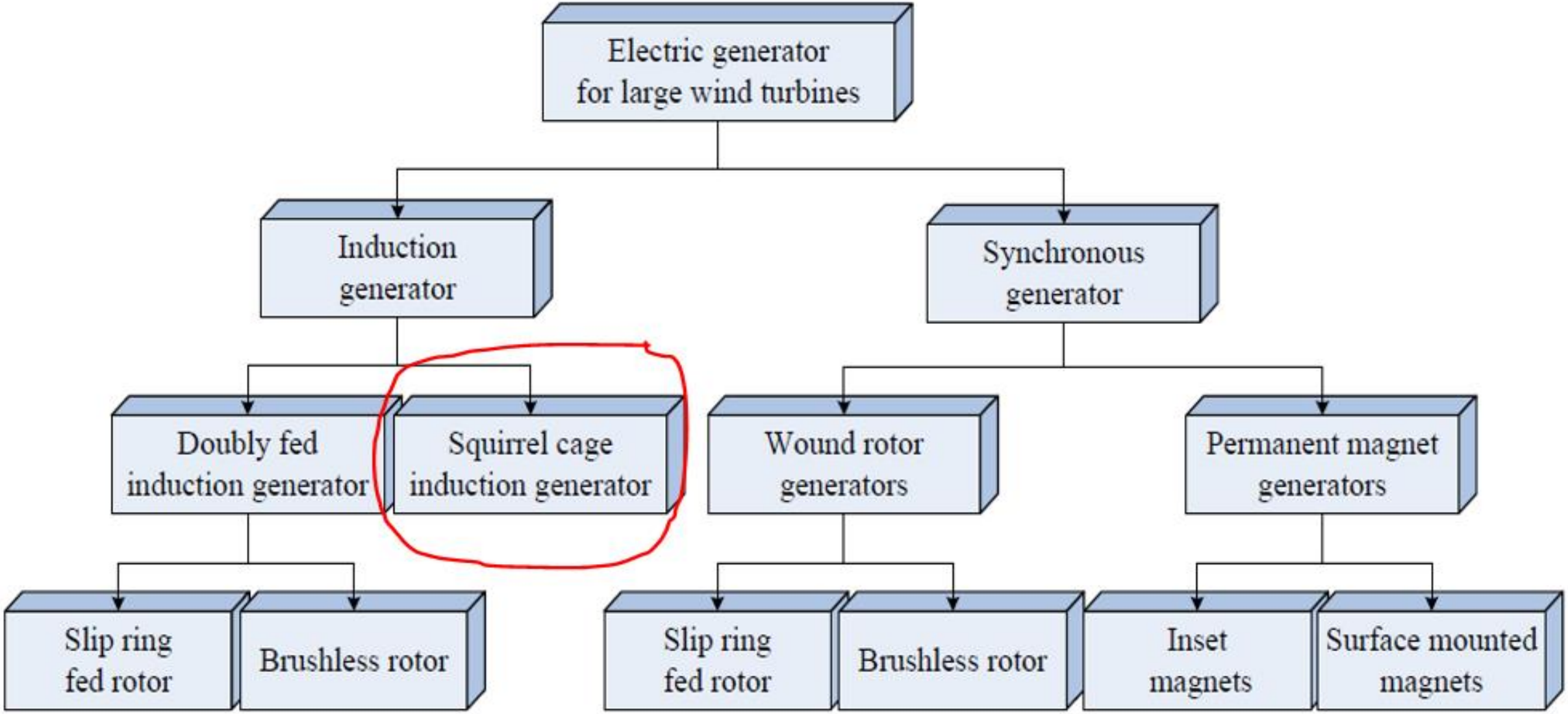

Rotor circuits (rotor bars) are **shorted internally**

Steady-state equivalent circuit of SCIG

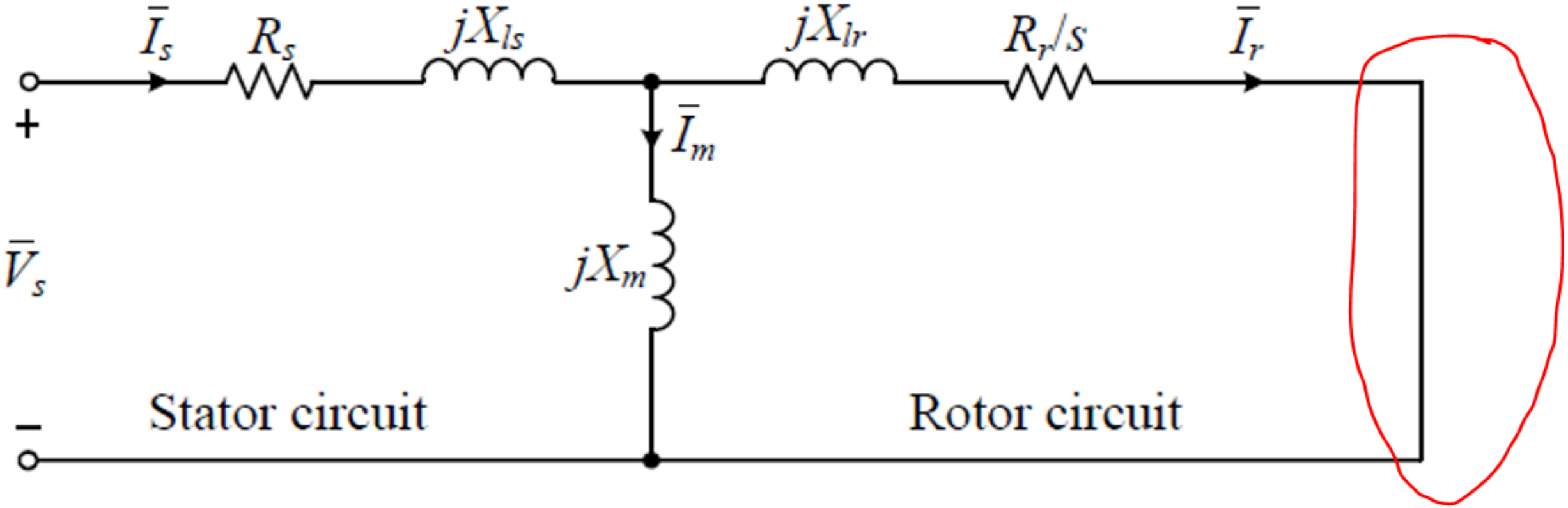

In Permanent Magnet Synchronous Generators (PMSG), rotor magnetic flux is generated by permanent magnets.

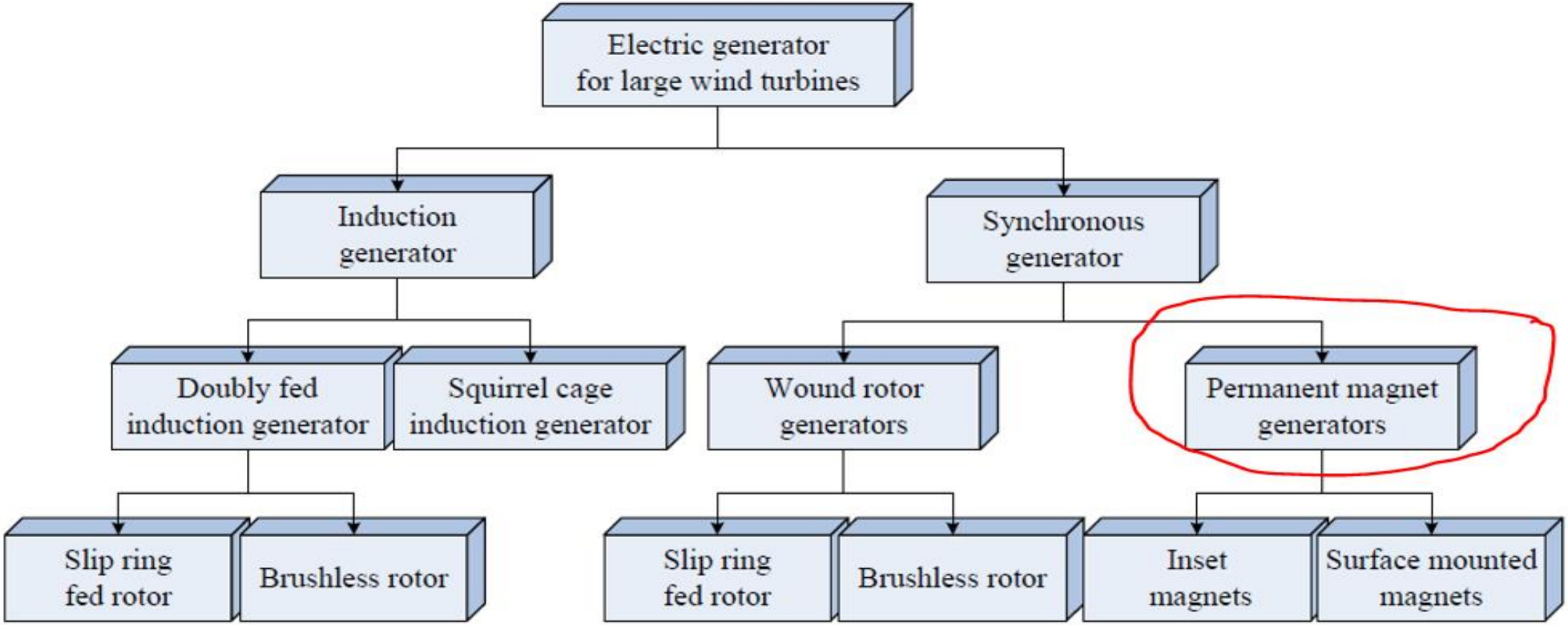

Examples of generators used in practical wind turbines

Generator Type	Doubly Fed Induction Generator (DFIG)	Squirrel Cage Induction Generator (SCIG)	Wound Rotor Synchronous Generator (WRSG)	Permanent Magnet Synchronous Generator (PMSG)	
Rated Voltage (line-to-line)	690V	690V	400V	700V	3000V
Rated Power	2MW	2.3MW	2.3MW	2.75MW	5.32MW
Rated Stator Frequency	50Hz	50Hz	na	na	19.6Hz
Speed Range	900 – 1900rpm	600 – 1600rpm	6 – 21.5rpm	6 – 18rpm	58.6 – 146.9rpm
Number of Poles	4	4	72	120	28
Brand/Model	Gamesa G90	Siemens SWT-2.3-101	Enercon E-70	Avantis AV928	Multibrid M5000

3.2 Reference Frame Transformation(RFT)

$$\begin{bmatrix} x_a \\ x_b \\ x_c \end{bmatrix} = \begin{bmatrix} \cos\theta & -\sin\theta \\ \cos(\theta - 2\pi/3) & -\sin(\theta - 2\pi/3) \\ \cos(\theta - 4\pi/3) & -\sin(\theta - 4\pi/3) \end{bmatrix} \cdot \begin{bmatrix} x_d \\ x_q \end{bmatrix}$$

$$\begin{bmatrix} x_\alpha \\ x_\beta \end{bmatrix} = \frac{2}{3} \begin{bmatrix} 1 & -1/2 & -1/2 \\ 0 & \sqrt{3}/2 & -\sqrt{3}/2 \end{bmatrix} \cdot \begin{bmatrix} x_a \\ x_b \\ x_c \end{bmatrix}$$

Most commonly used Reference Frame Transformation(RFT)?

Most commonly used Reference Frame Transformation?

1. Three-phase stationary frame (*abc* frame)

2. Two-phase stationary frame (αβ frame)

3. Synchronous frame (*dq* rotating frame)

3.2.1 *abc/dq* Reference Frame Transformation

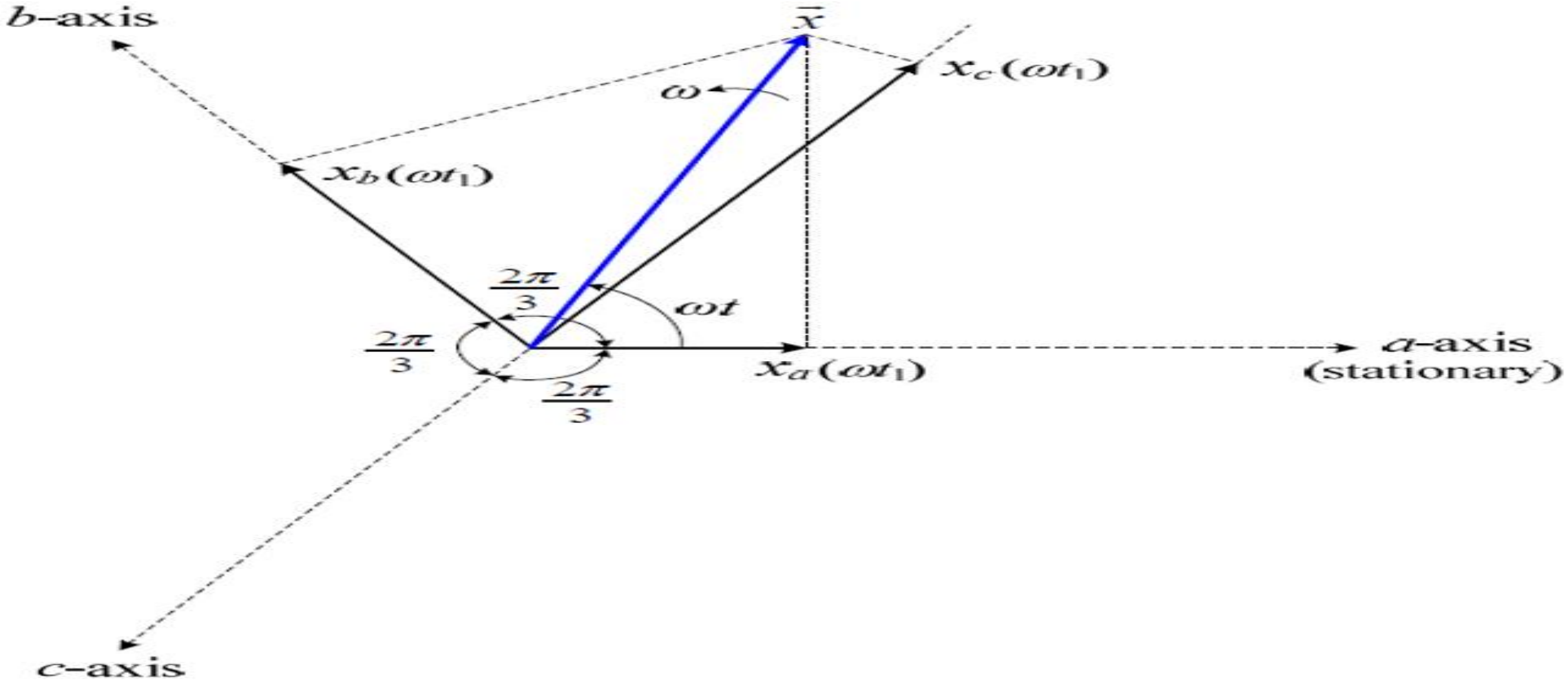

Consider 3-phase electrical variables, x_a, x_b & x_c, which can represent either: **voltage, current or flux linkage.**

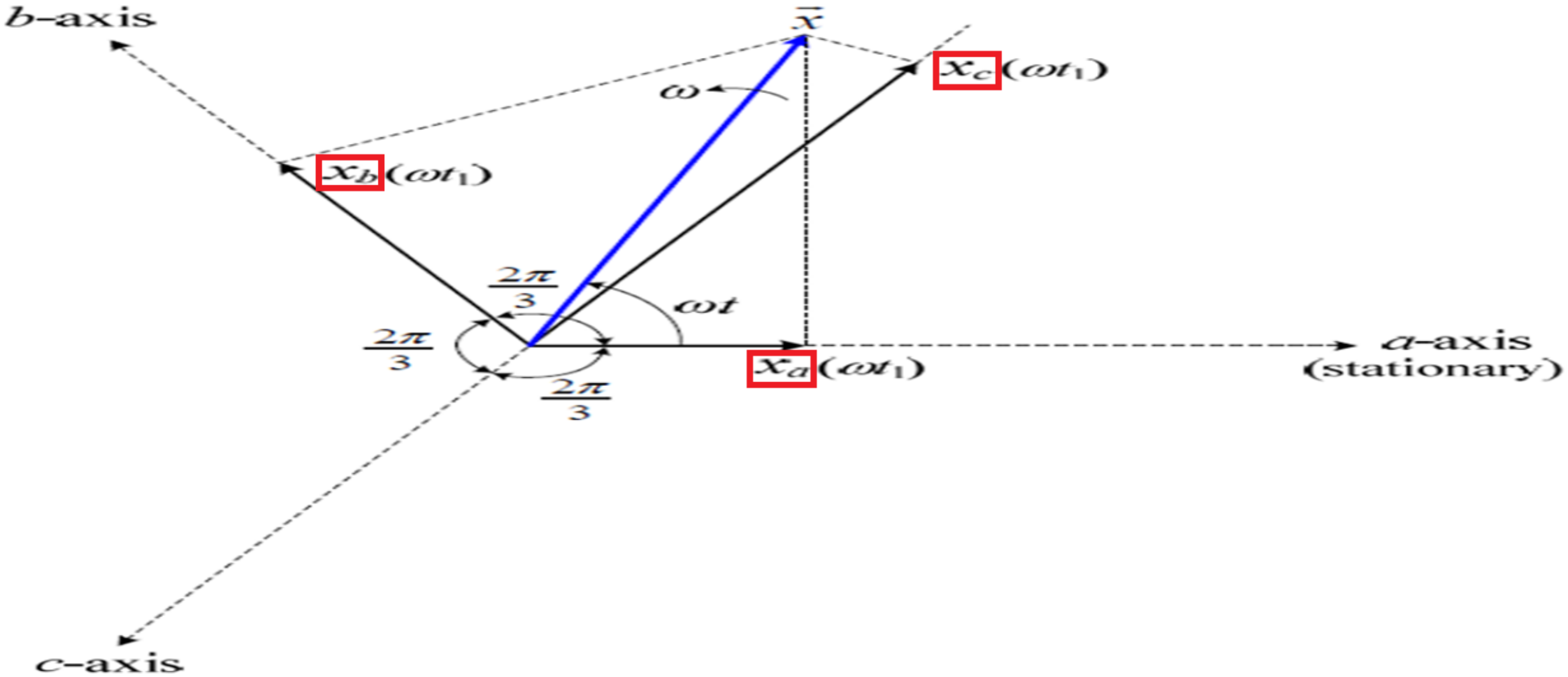

3-phase variables x_a, x_b & x_c can be represented by a space vector $\vec{x}$ in a 3-phase (abc) stationary reference frame (coordinate system).

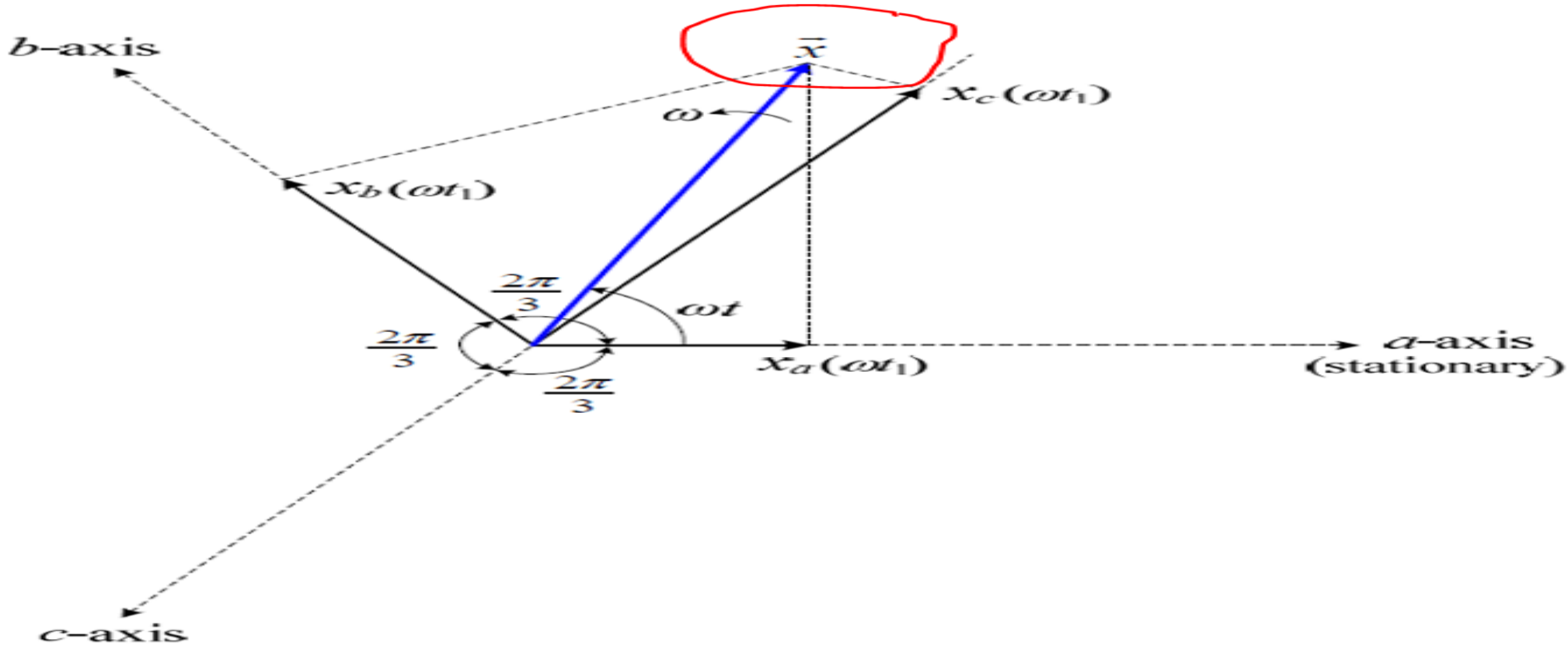

Space vector $\vec{x}$ **rotates at an arbitrary speed ω** with respect to *abc* stationary frame.

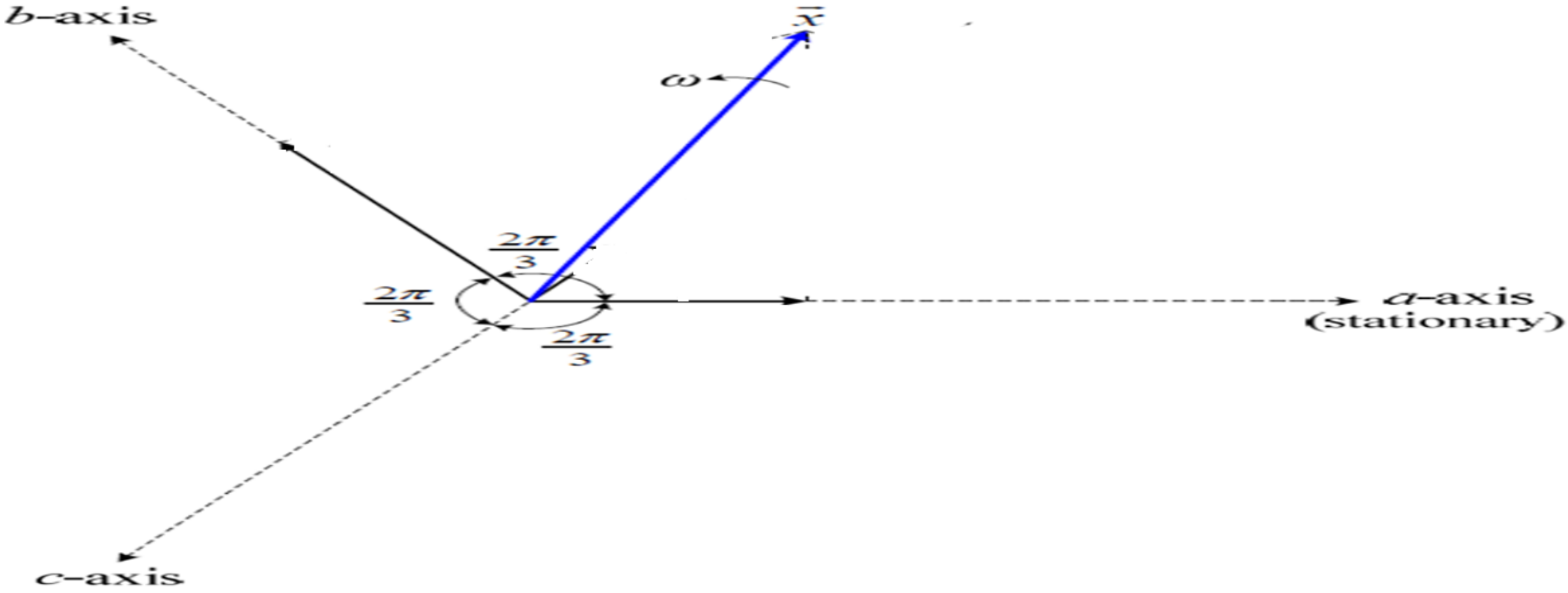

a-, b- & c- axes are $2\pi/3$ apart in space

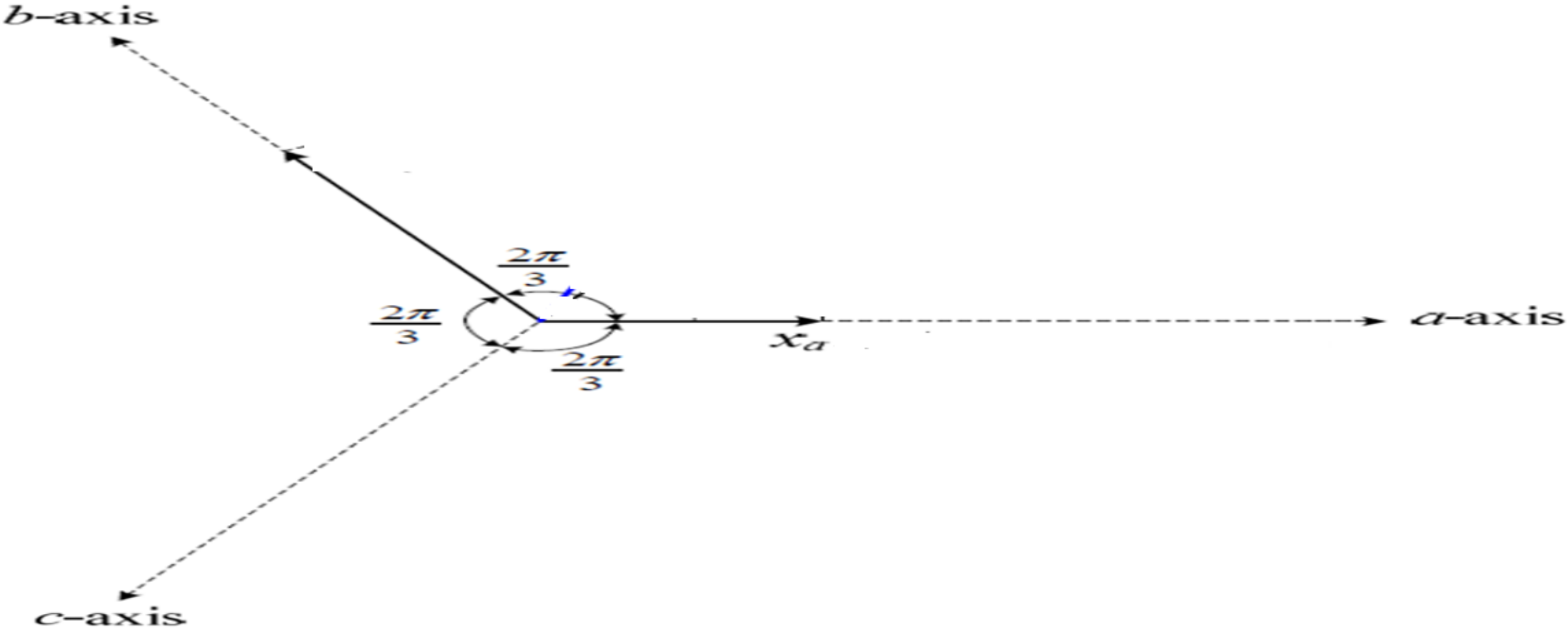

Phase values, x_a, x_b & x_c, can be obtained by projecting to corresponding *a*-, *b*-, & *c*- axes

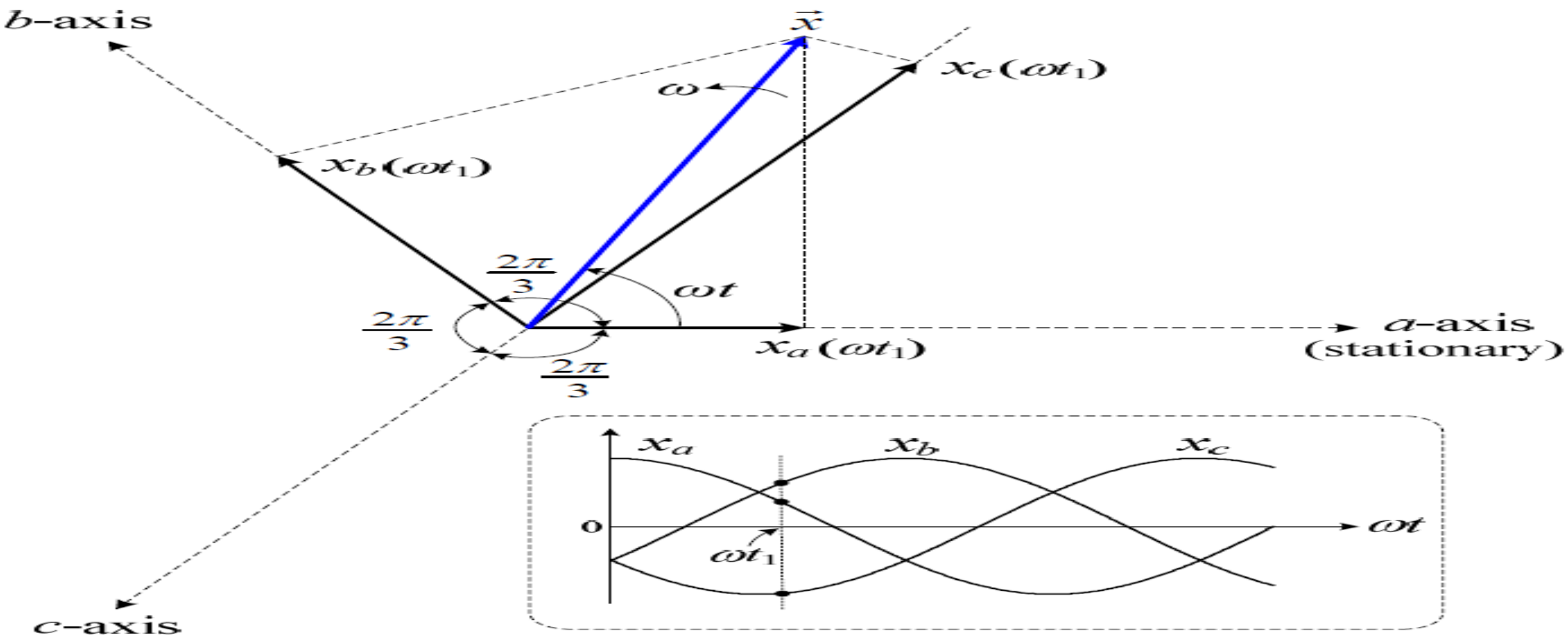

Assumptions: 1.Length (magnitude) & rotating speed (ω) of space vector $\vec{x}$ are constant

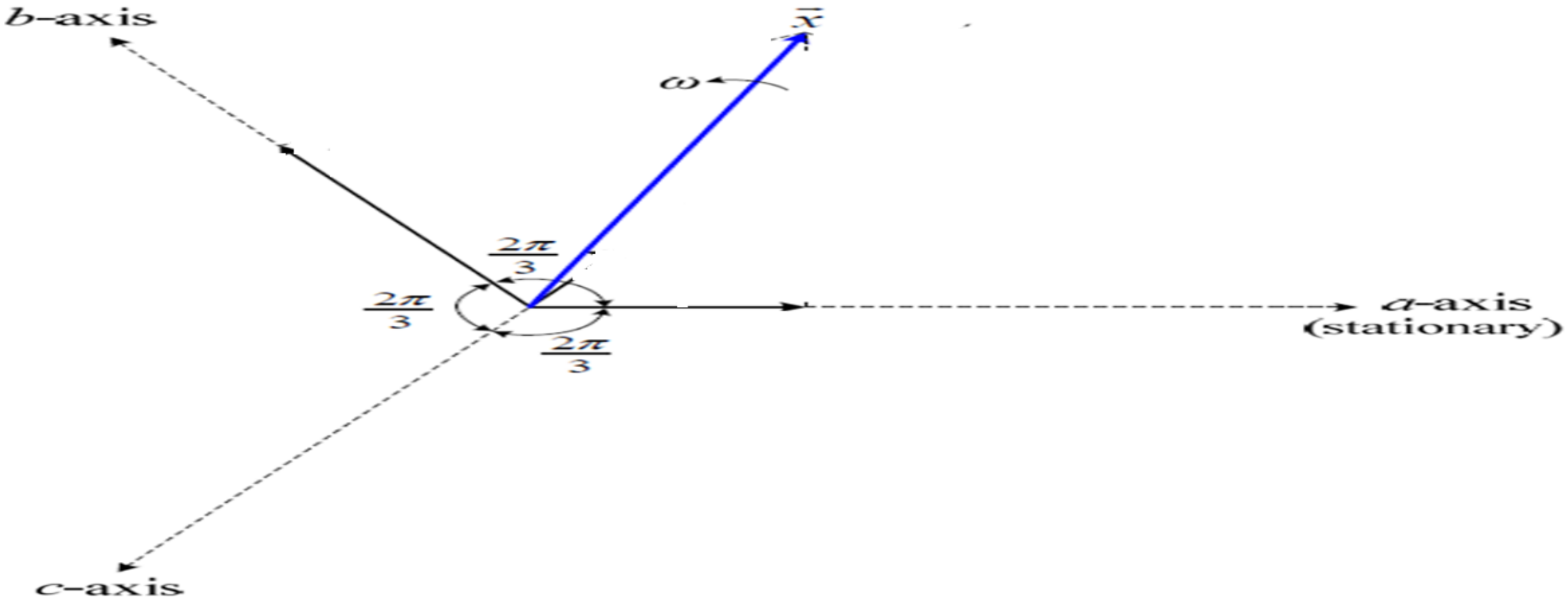

2. Waveforms of *xa*, *xb* & *xc* are sinusoidal

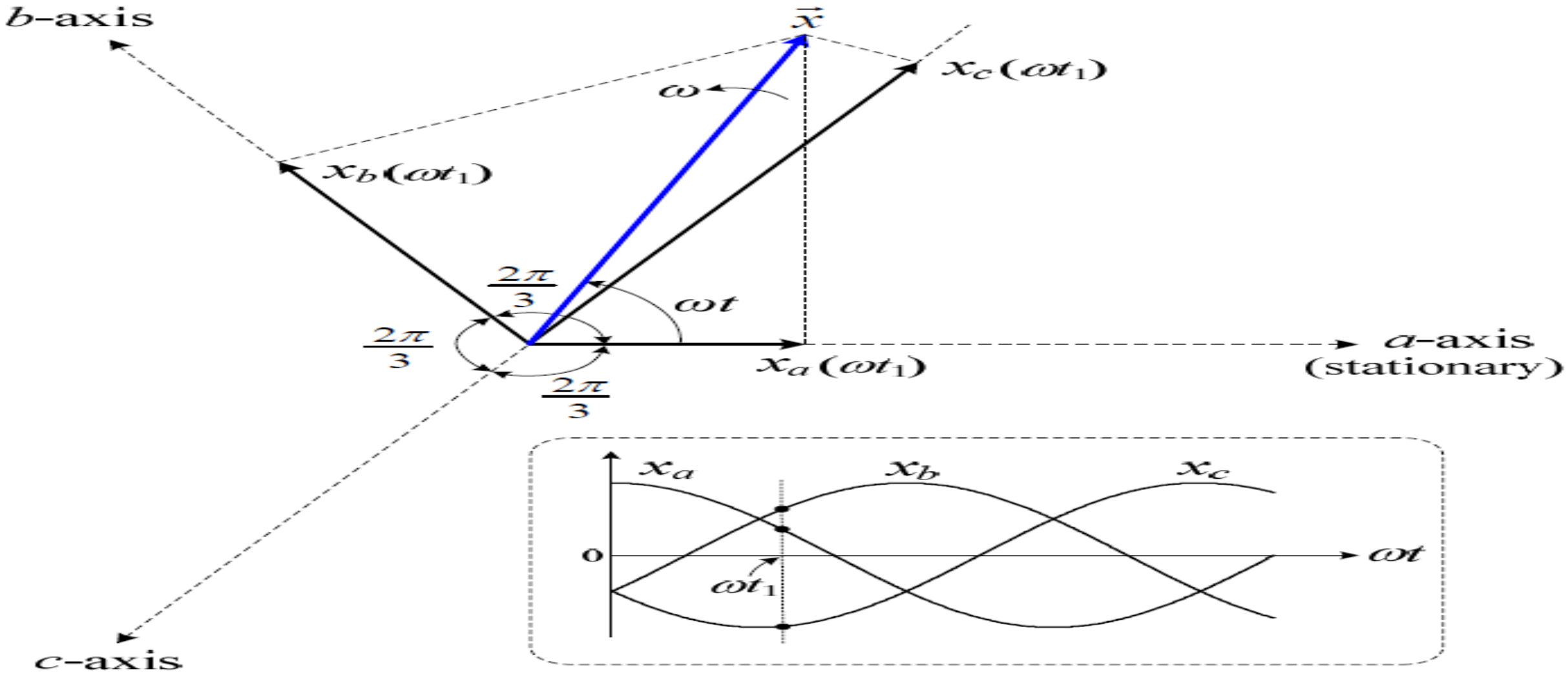

3. Phase displacement of 2π / 3 =120º between any 2 waveforms.

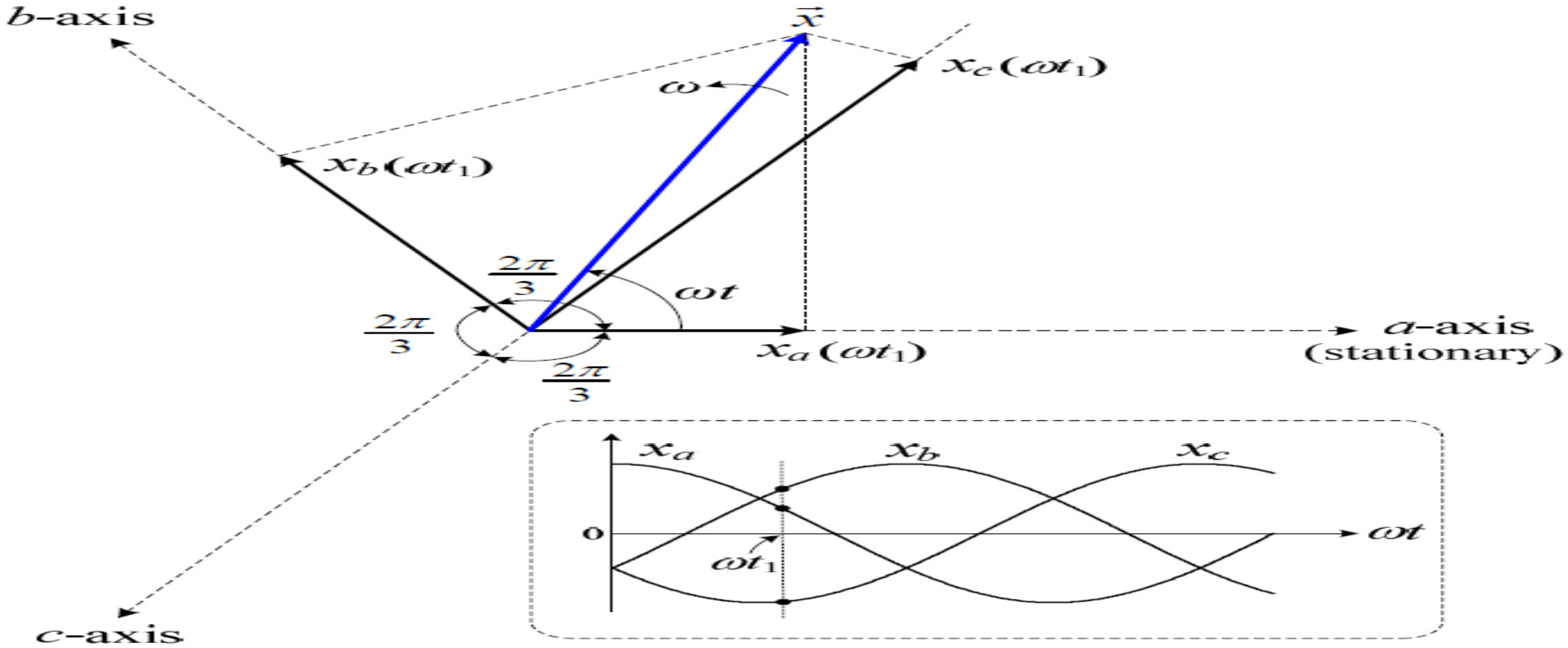

At instant of ωt_1, $\boldsymbol{xb>xa}$, & xc is -ve

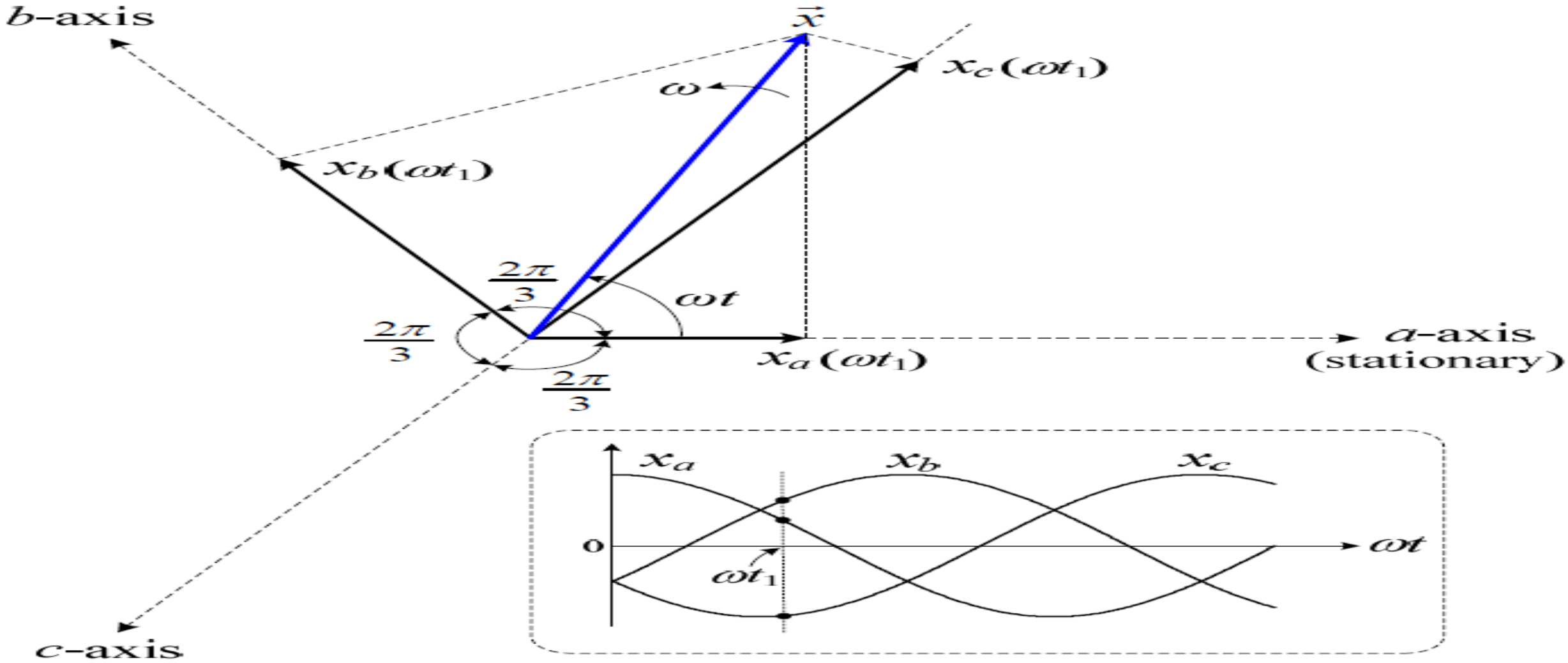

Transformation of variables in 3-phase (*abc*) stationary frame to 2-phase (*dq*) arbitrary frame.

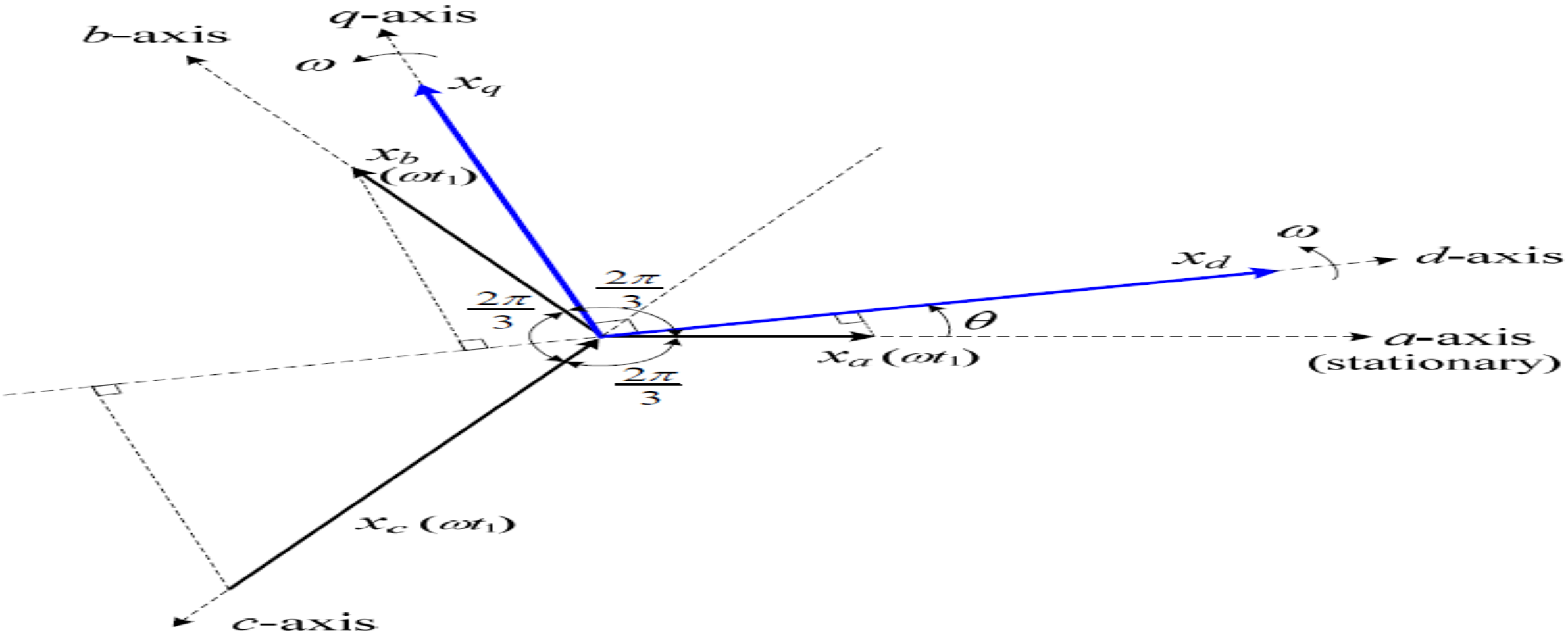

3-phase variables in *abc* stationary frame *xa*, *xb* & *xc*

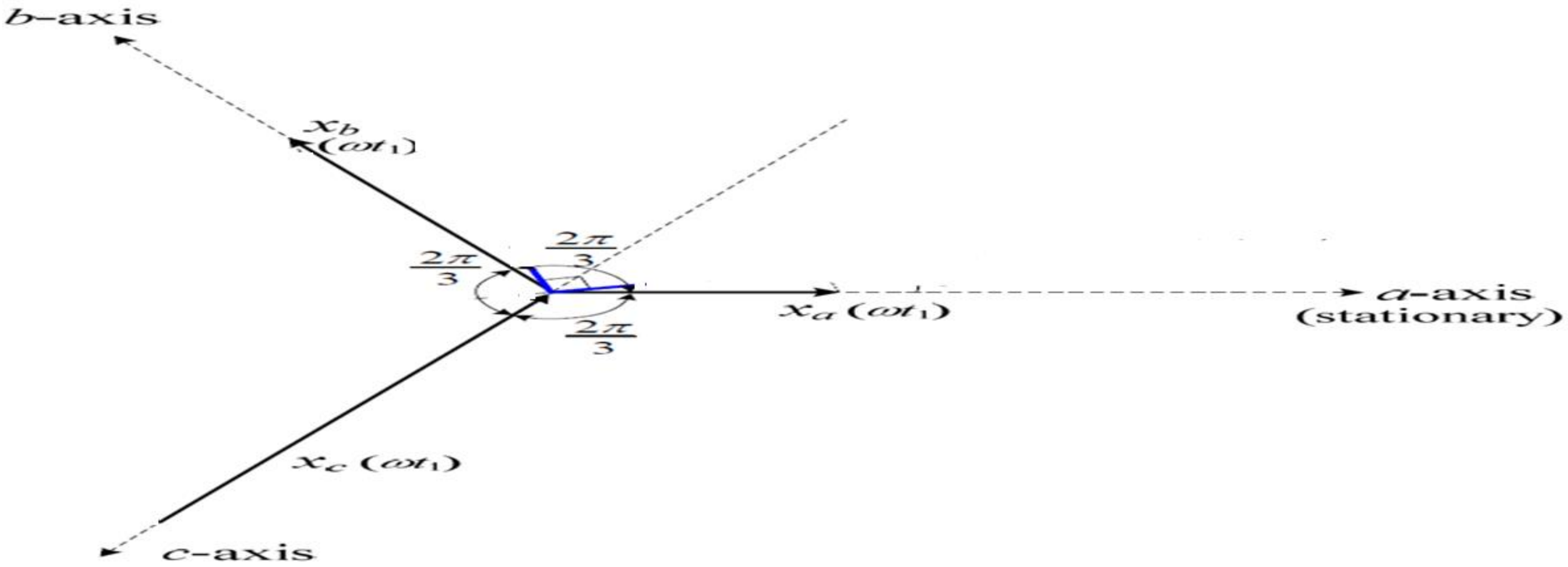

d (direct) & *q* (quadrature) axes are perpendicular to each other.

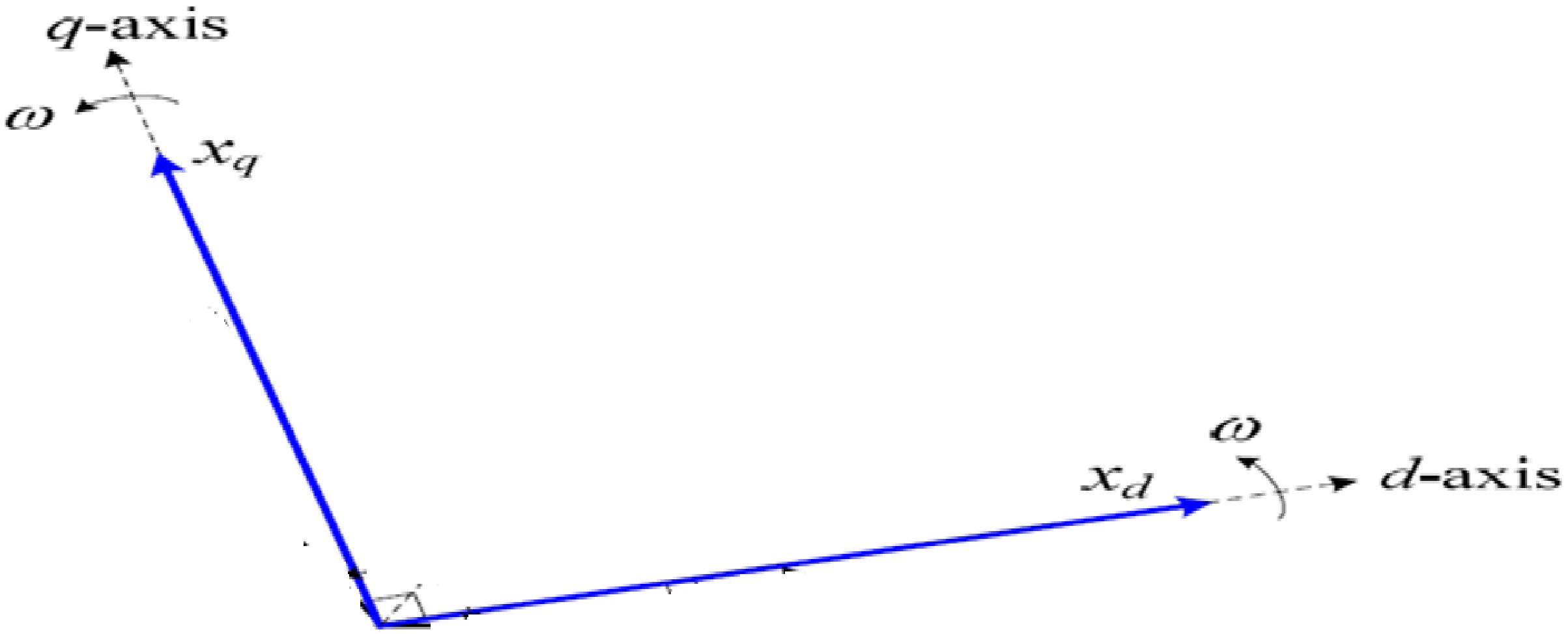

Lets fit these frames with each other

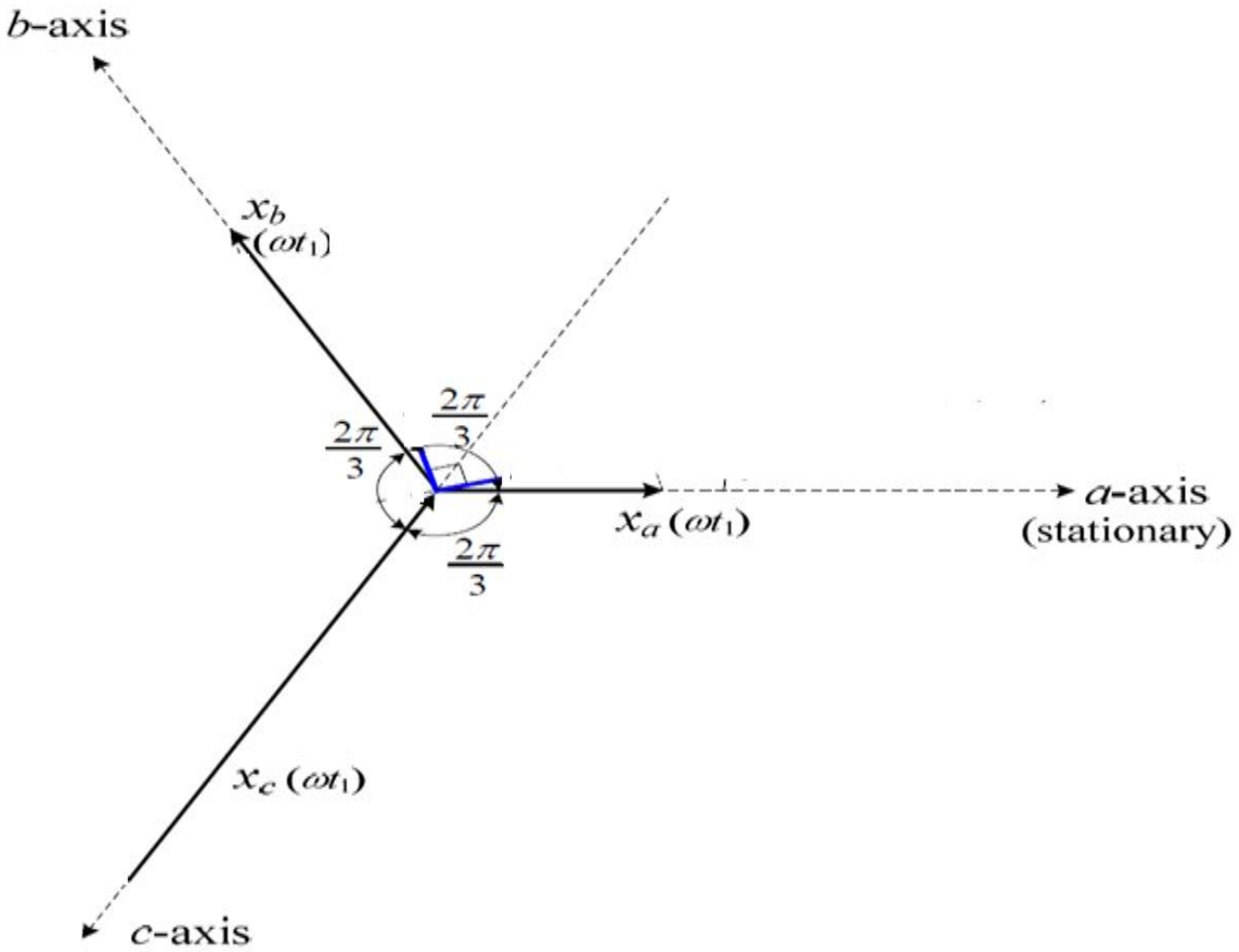

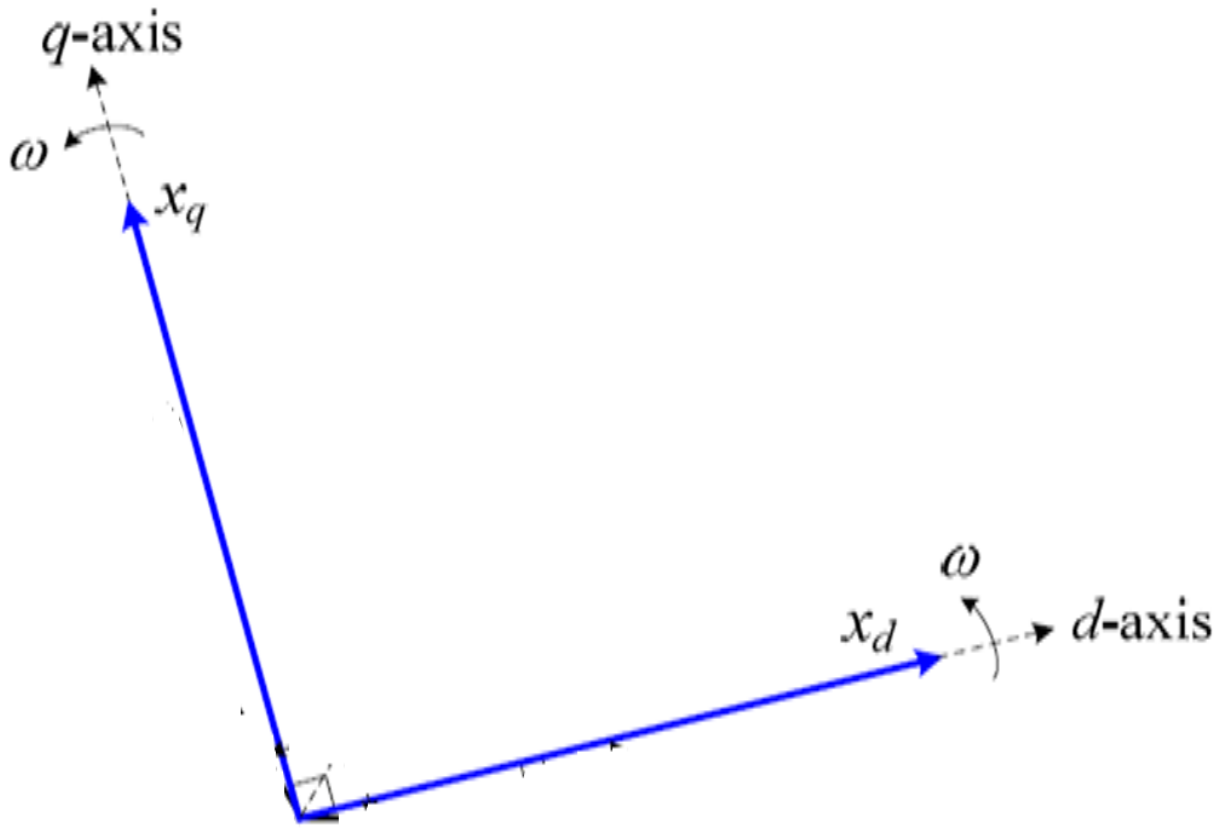

3-phase variables in *abc* stationary frame *xa*, *xb* & *xc* can be transformed into 2-phase variables in a reference frame defined by *d* (direct) & *q* (quadrature) axes that are perpendicular to each other.

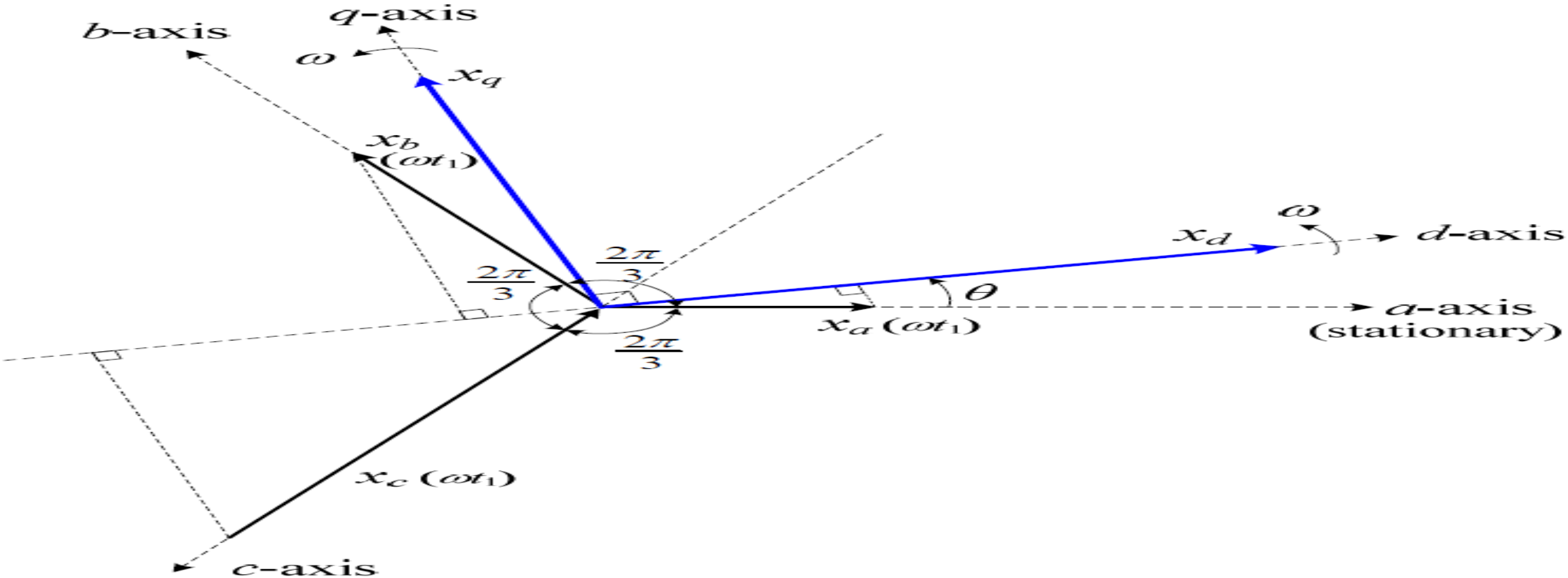

Angle θ is between *a*-axis(stationary) & *d*-axis (direct).

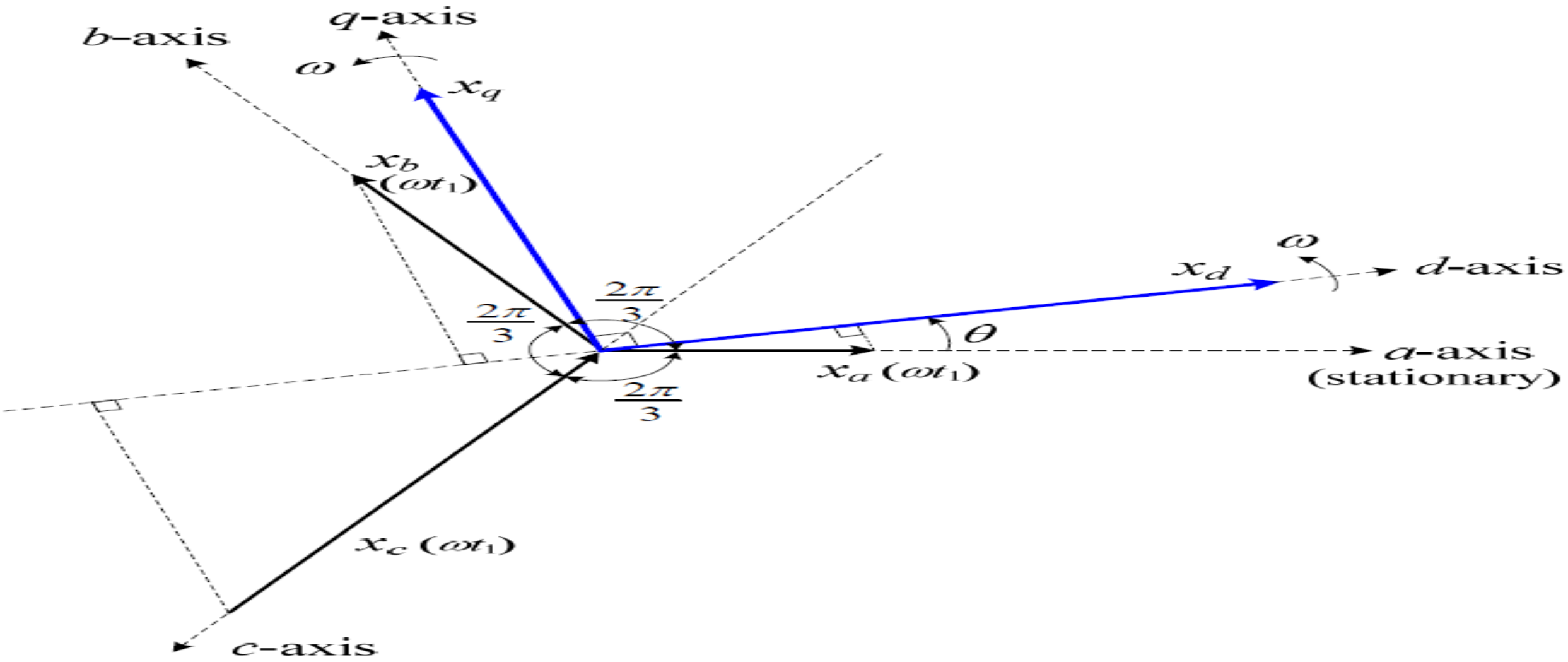

In order to obtain dq-axis rotation we take derivative of angle θ given by: **ω = *dθ/dt*.**

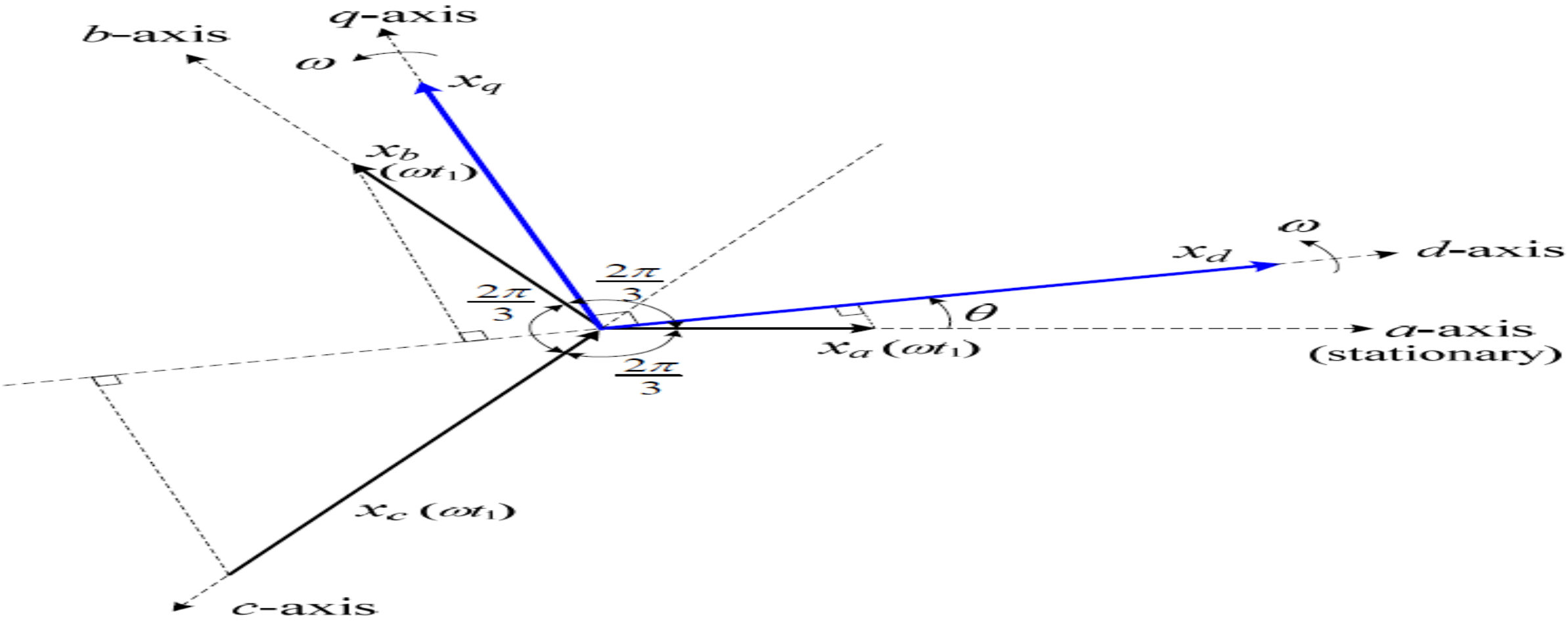

We apply trigonometric functions to transform variables in *abc* stationary frame to *dq* rotating frame

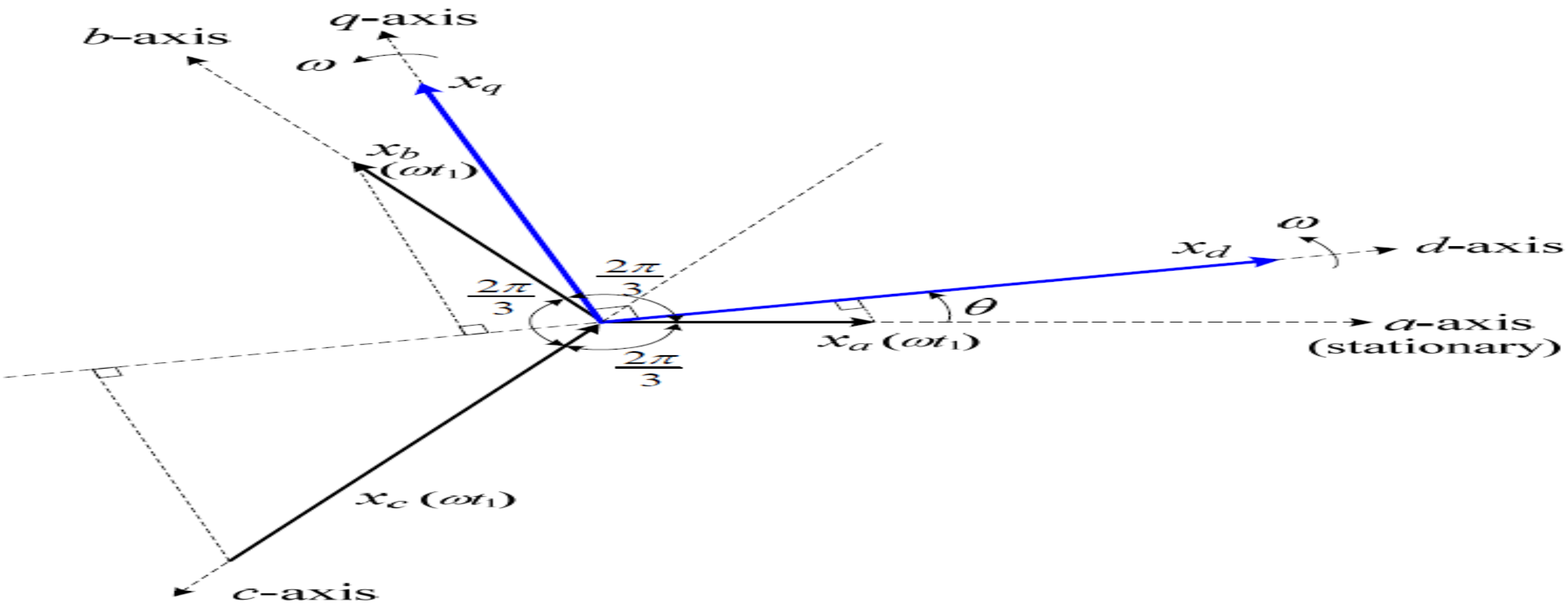

Take orthogonal projection of *xa*, *xb* & *xc* variables to *dq*-axis (For simplicity only projections to *d*-axis are shown)

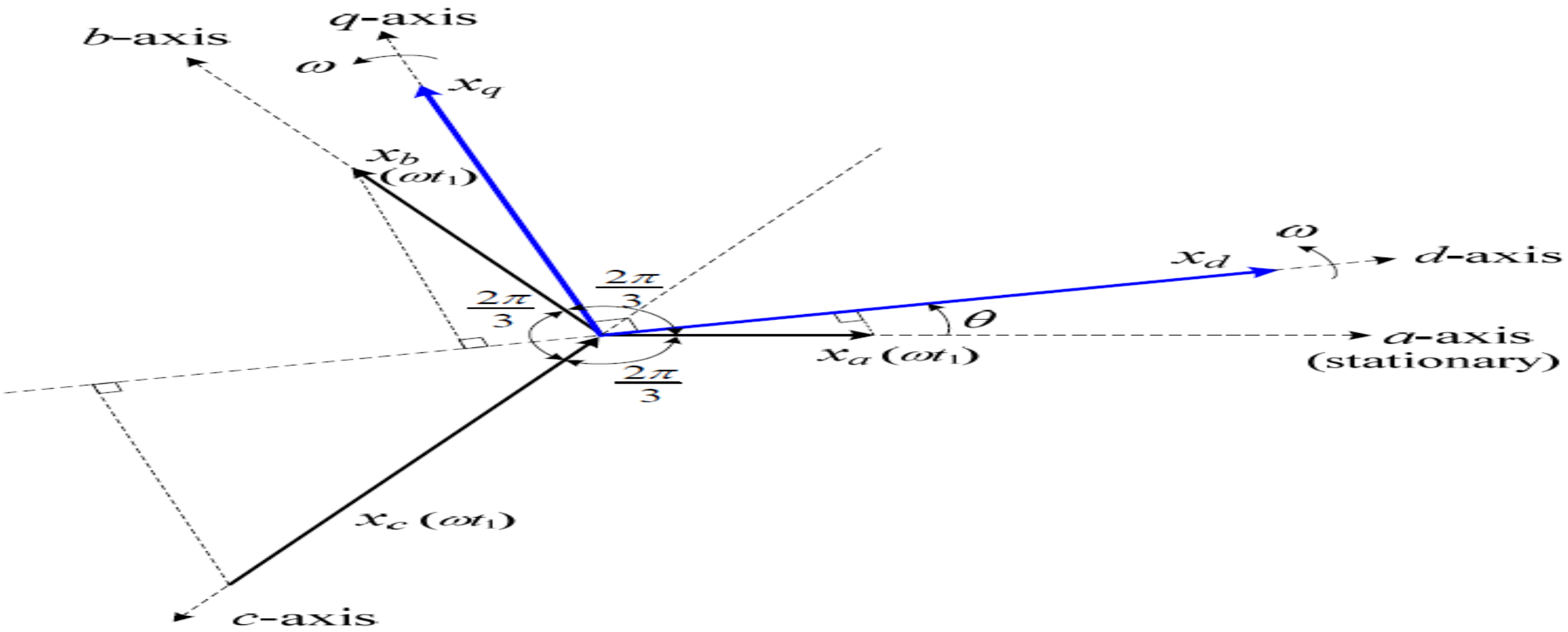

Sum of all projections of *xa*, *xb* & *xc* variables **on *d*-axis corresponds to transformed *xd*?**

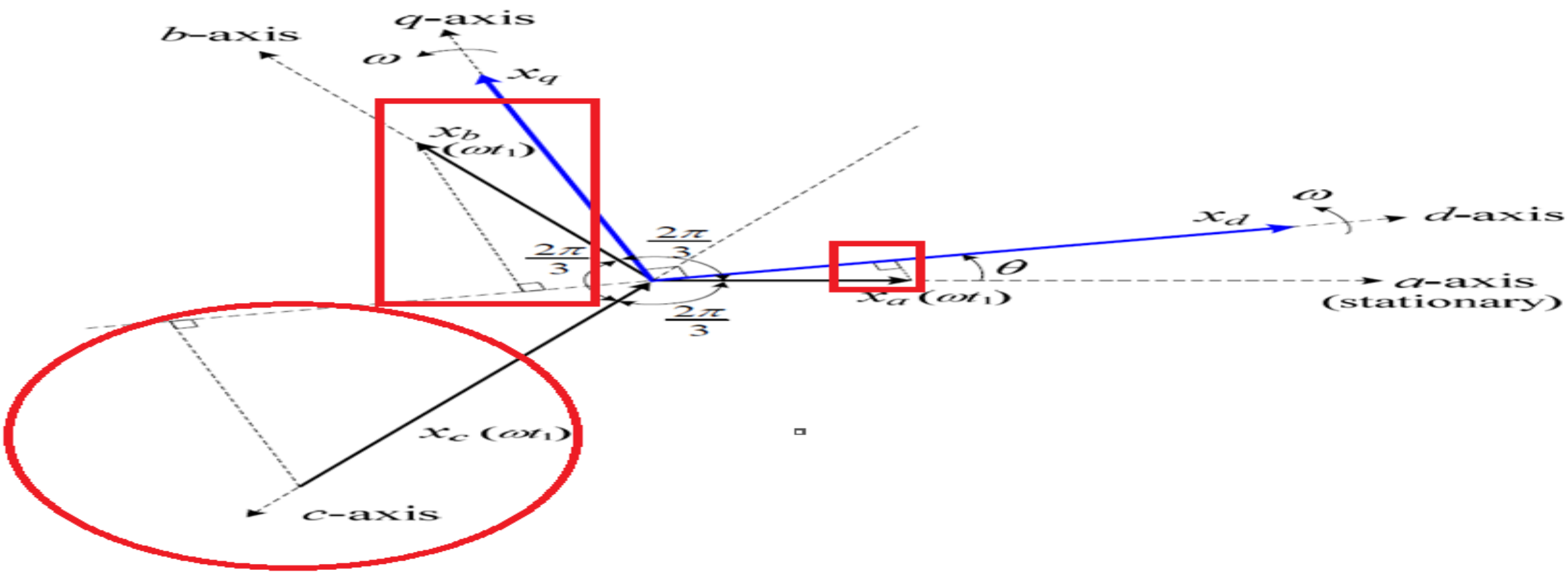

Hint:

- 1st calculate angles of x_a, x_b & x_c variables with respect to x_d:

Angles of x_a, x_b & x_c variables with respect to x_d?

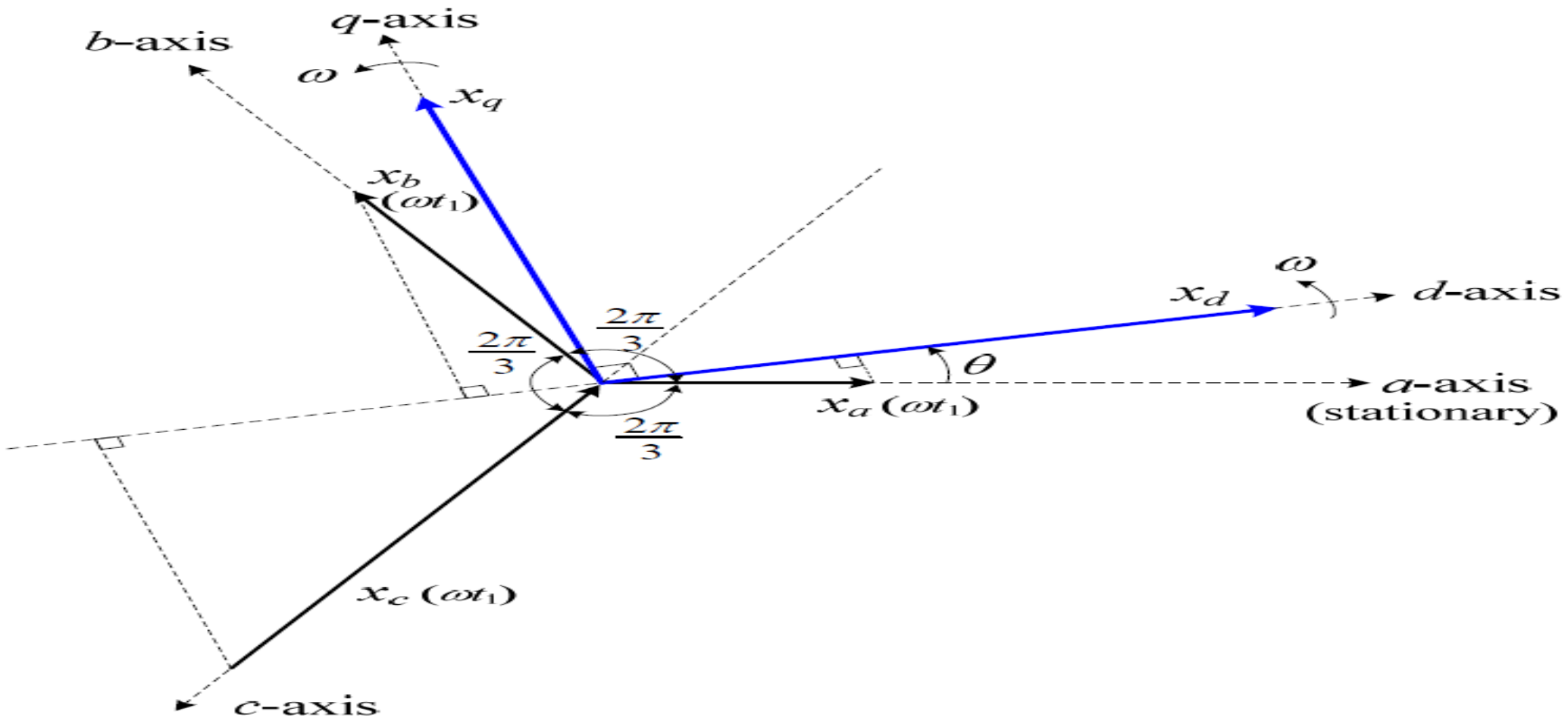

What is the angle of x_a variable with x_d?

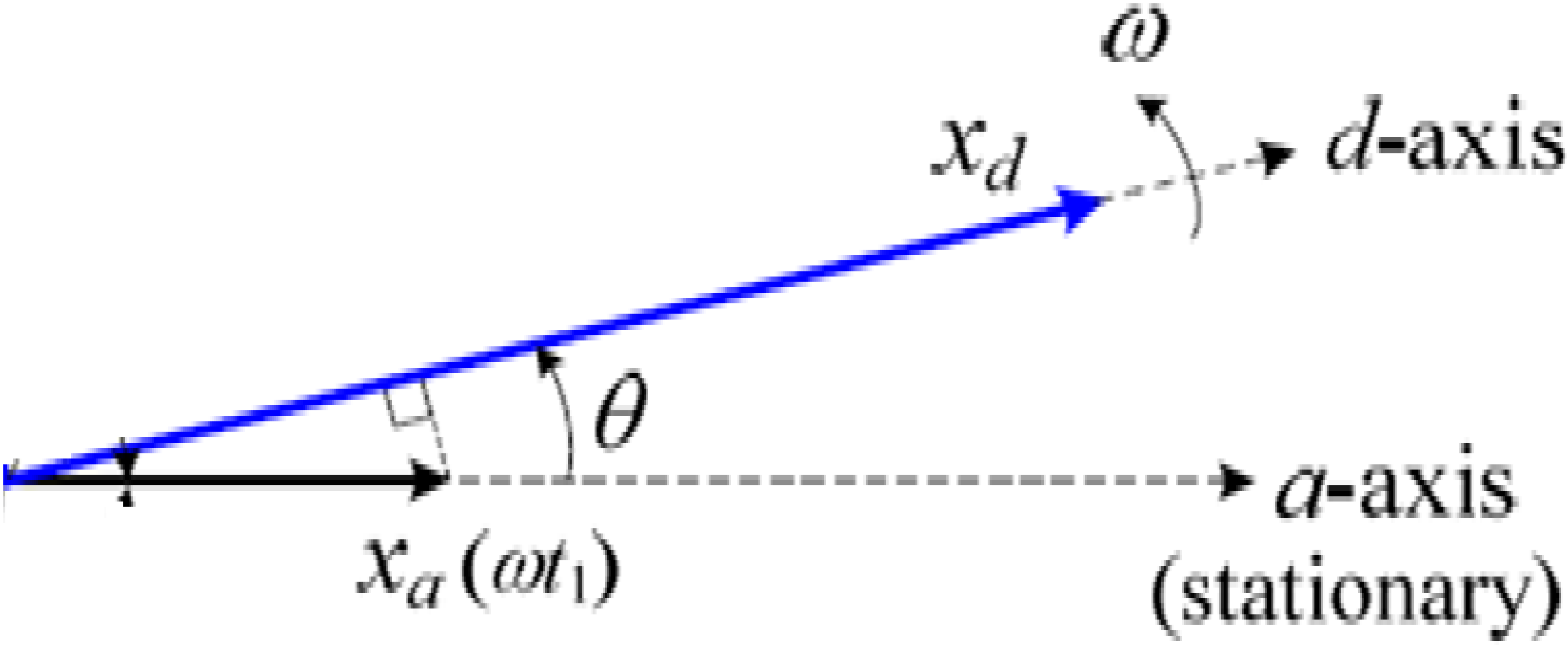

Angle of x_a variable with x_d is θ

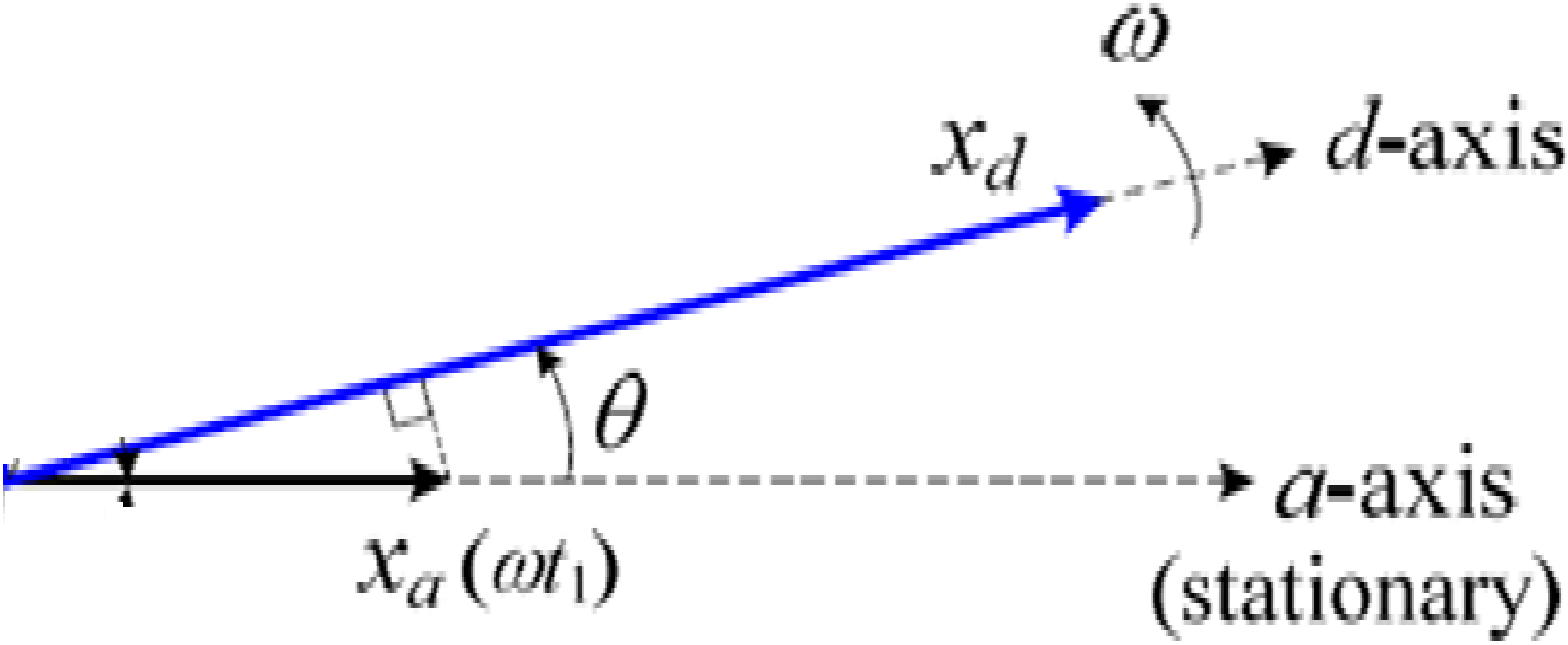

What is the angle of x_b variable with x_d?

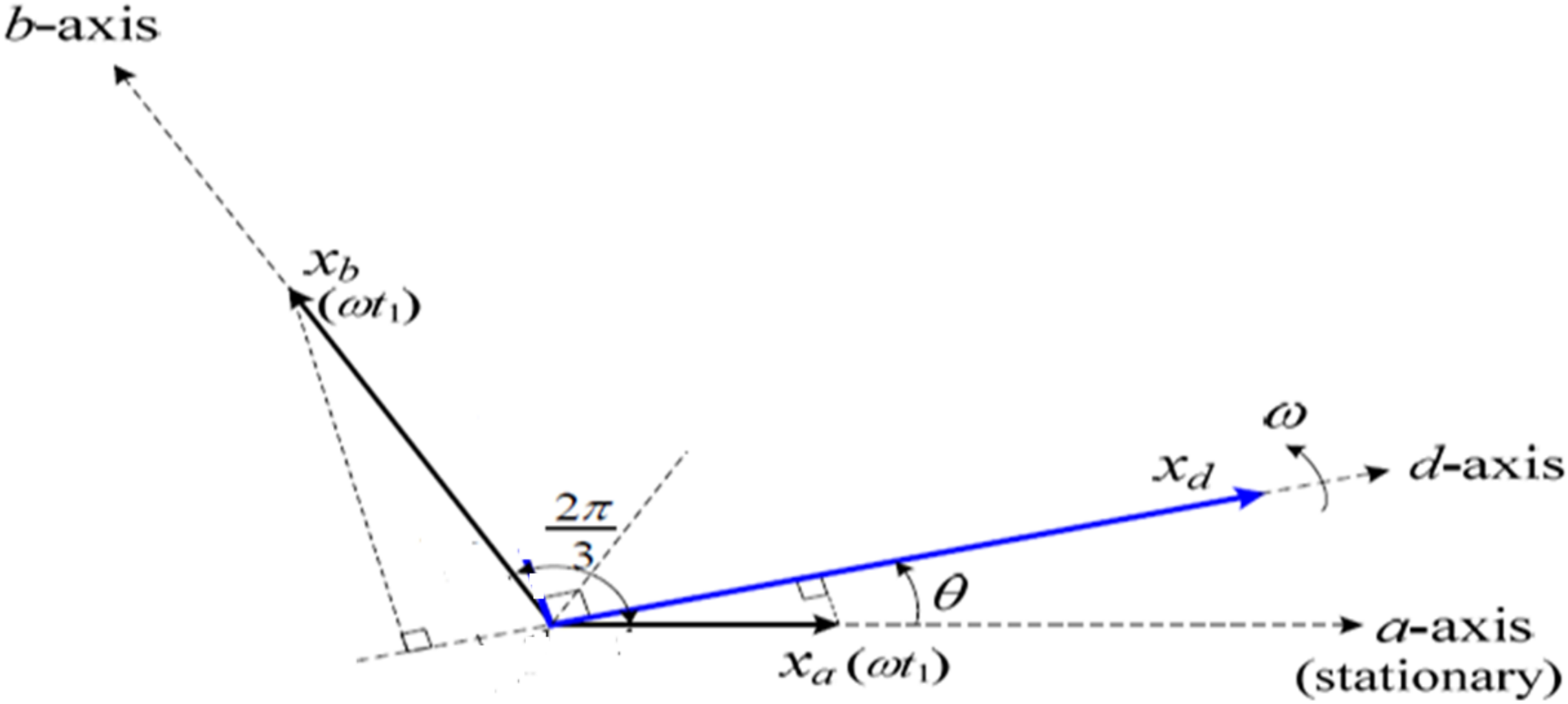

Angle x_b variable with x_d is $(2\pi / 3 - \theta)$

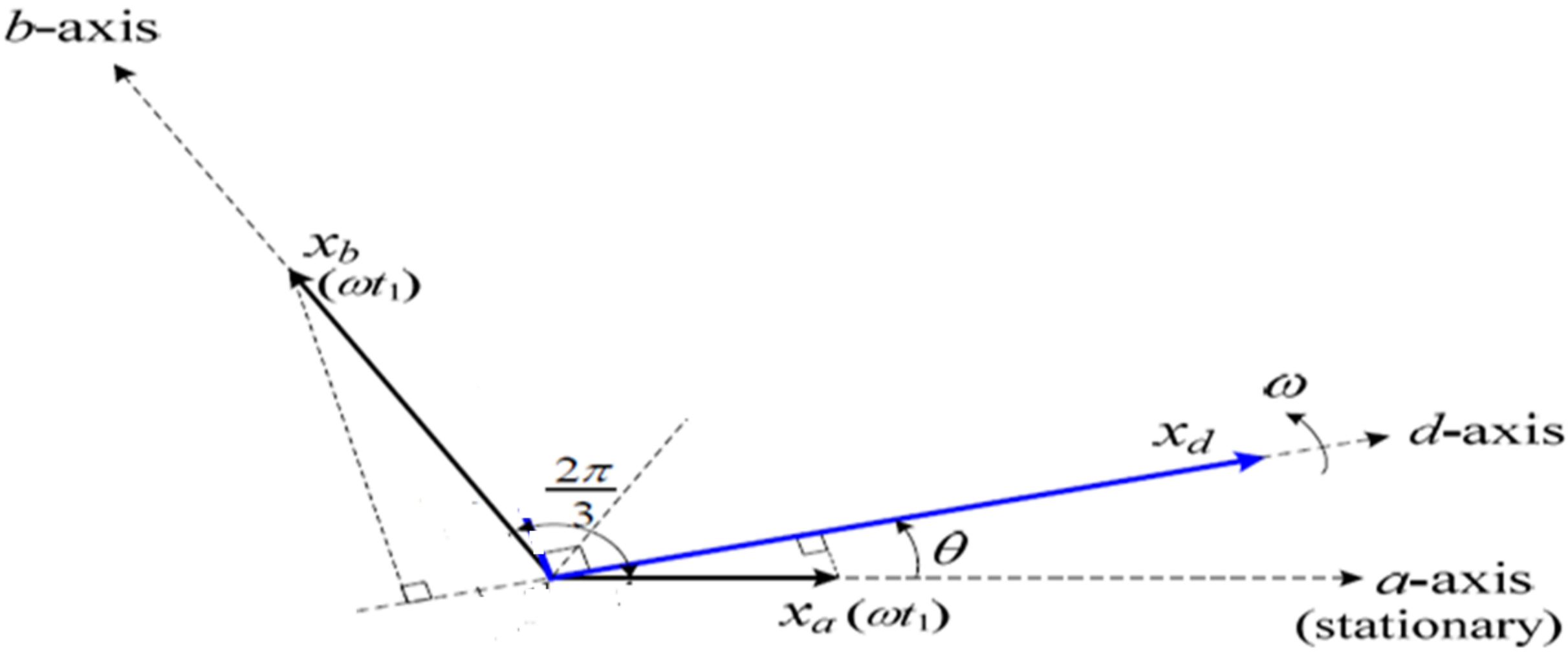

What is the angle of x_c variable with x_d?

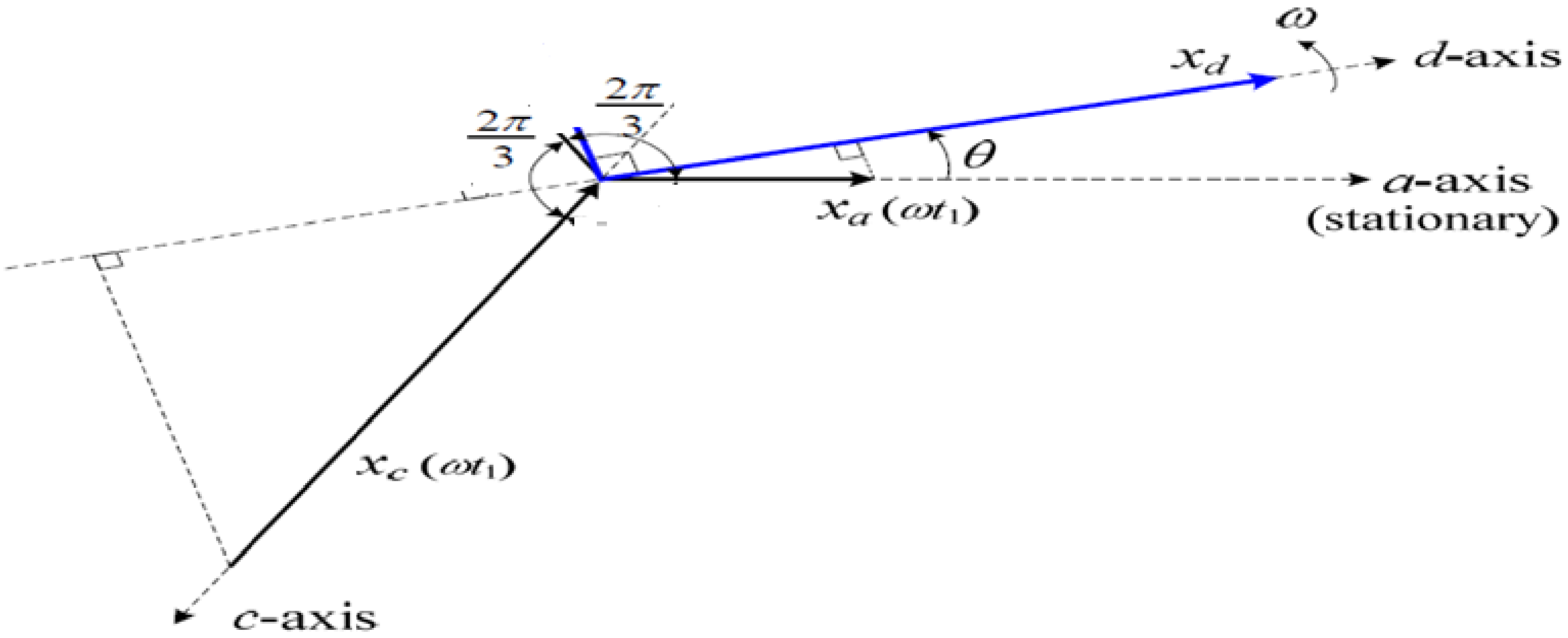

Angle of x_c with x_d is $(4\pi / 3 - \theta)$

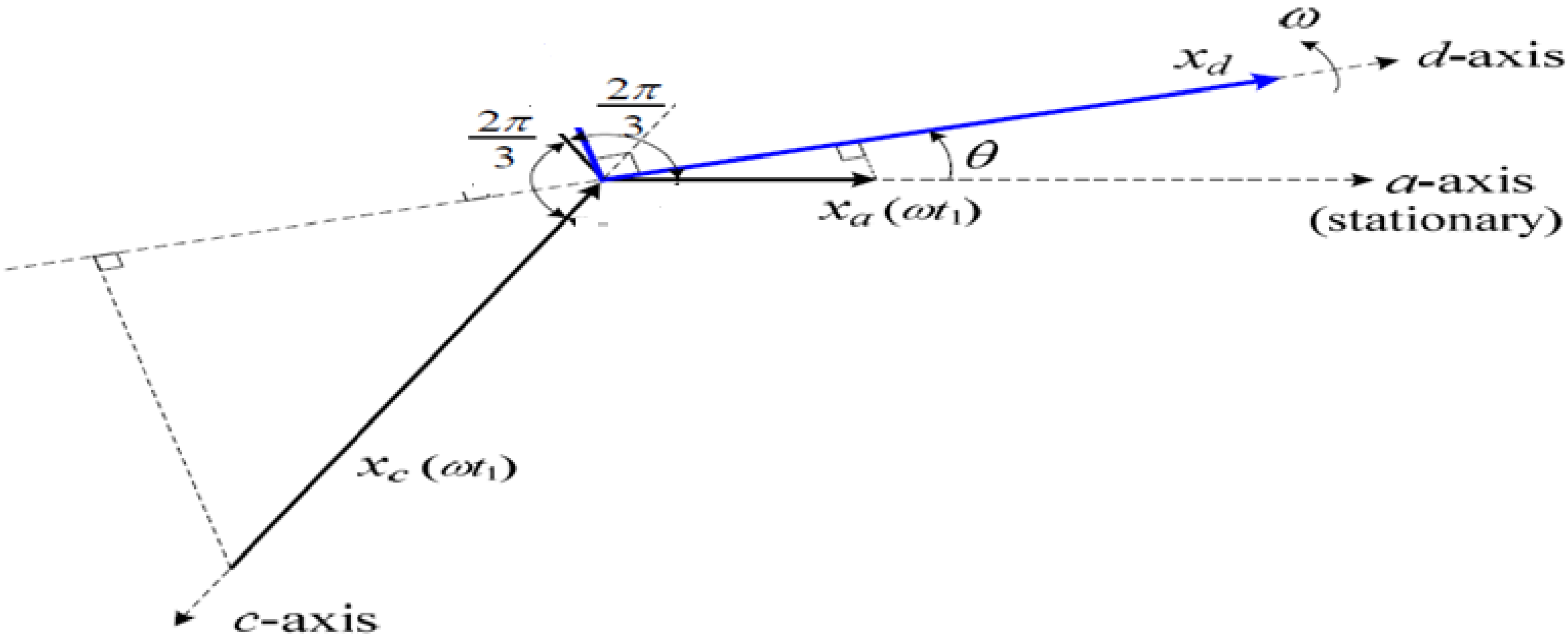

Sum of all projections on *d*-axis corresponds to transformed x_d

$x_d = x_a\cos\theta + x_b\cos(2\pi / 3 - \theta) + x_c\cos(4\pi / 3 - \theta)$, which can be rewritten as $x_d = x_a\cos\theta + x_b\cos(\theta - 2\pi / 3) + x_c\cos(\theta - 4\pi / 3)$.

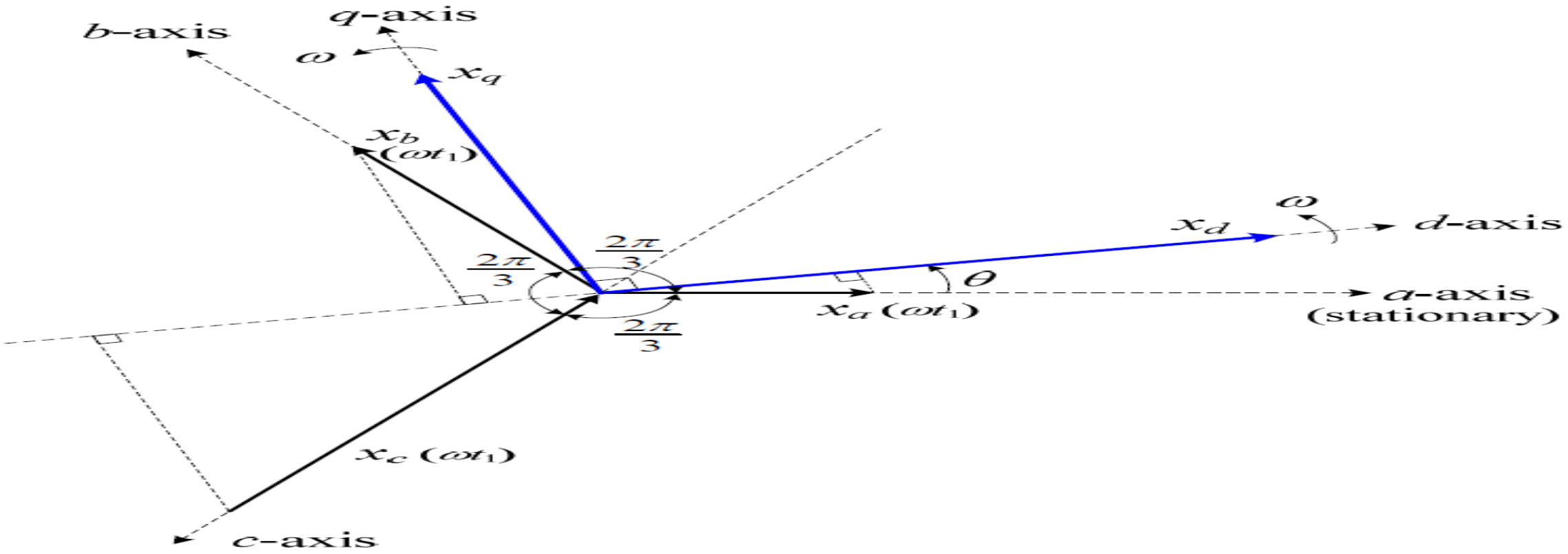

Similarly, the transformation of the *abc* variables into the *q*-axis can be performed.

- $xq = -xa\sin\theta - xb\sin(\theta - 2\pi / 3) - xc\sin(\theta - 4\pi / 3)$

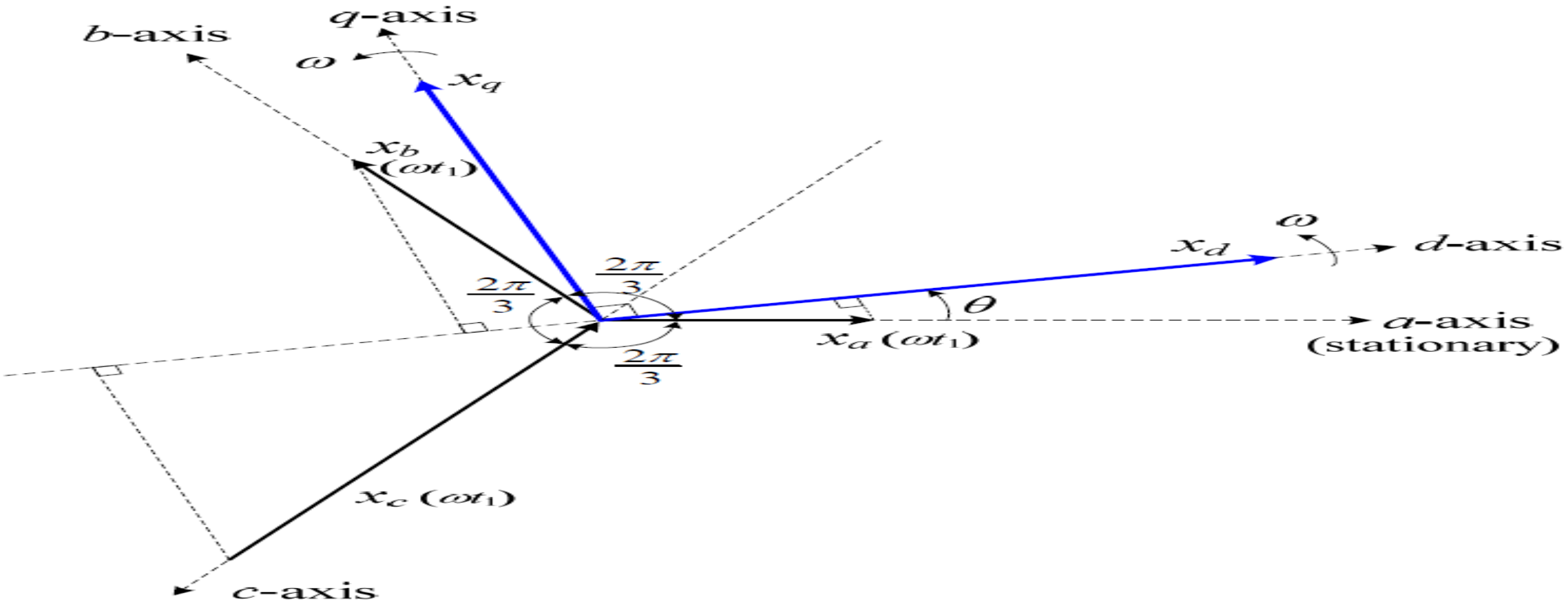

Try to express transformation of *abc* variables to *dq* frames, referred to as *abc*/*dq* transformation, in a matrix form?

- $xd = xa\cos\theta + xb\cos(\theta - 2\pi / 3) + xc\cos(\theta - 4\pi / 3)$
- $xq = -xa\sin\theta - xb\sin(\theta - 2\pi / 3) - xc\sin(\theta - 4\pi / 3)$

Matrix form:

- $xd = xa\cos\theta + xb\cos(\theta - 2\pi / 3) + xc\cos(\theta - 4\pi / 3)$
- $xq = -xa\sin\theta - xb\sin(\theta - 2\pi / 3) - xc\sin(\theta - 4\pi / 3)$

$$\begin{bmatrix} x_d \\ x_q \end{bmatrix} = \frac{2}{3}\begin{bmatrix} \cos\theta & \cos(\theta - 2\pi/3) & \cos(\theta - 4\pi/3) \\ -\sin\theta & -\sin(\theta - 2\pi/3) & -\sin(\theta - 4\pi/3) \end{bmatrix} \cdot \begin{bmatrix} x_a \\ x_b \\ x_c \end{bmatrix}$$

Significance of 2/3 coefficient in the *abc*/*dq* transformation?

- $x_d = x_a\cos\theta + x_b\cos(\theta - 2\pi/3) + x_c\cos(\theta - 4\pi/3)$
- $x_q = -x_a\sin\theta - x_b\sin(\theta - 2\pi/3) - x_c\sin(\theta - 4\pi/3)$

$$\begin{bmatrix} x_d \\ x_q \end{bmatrix} = \frac{2}{3}\begin{bmatrix} \cos\theta & \cos(\theta - 2\pi/3) & \cos(\theta - 4\pi/3) \\ -\sin\theta & -\sin(\theta - 2\pi/3) & -\sin(\theta - 4\pi/3) \end{bmatrix} \cdot \begin{bmatrix} x_a \\ x_b \\ x_c \end{bmatrix}$$

Significance of 2/3 coefficient in the *abc*/*dq* transformation

$$\begin{bmatrix} x_d \\ x_q \end{bmatrix} = \frac{2}{3}\begin{bmatrix} \cos\theta & \cos(\theta - 2\pi/3) & \cos(\theta - 4\pi/3) \\ -\sin\theta & -\sin(\theta - 2\pi/3) & -\sin(\theta - 4\pi/3) \end{bmatrix} \cdot \begin{bmatrix} x_a \\ x_b \\ x_c \end{bmatrix}$$

- Coefficient of 2/3 is arbitrarily added to equation.
- Main advantage of using 2/3 is that magnitude of 2-phase voltages is equal to that of 3-phase voltages after transformation.

dq variables in rotating frame can be transformed back to *abc* variables in stationary frame through inverse matrix operation. Hence 3-phase ac variables can be represented by 2-phase dc variables.

$$\begin{bmatrix} x_d \\ x_q \end{bmatrix} = \frac{2}{3}\begin{bmatrix} \cos\theta & \cos(\theta - 2\pi/3) & \cos(\theta - 4\pi/3) \\ -\sin\theta & -\sin(\theta - 2\pi/3) & -\sin(\theta - 4\pi/3) \end{bmatrix} \cdot \begin{bmatrix} x_a \\ x_b \\ x_c \end{bmatrix}$$

$$\begin{bmatrix} x_a \\ x_b \\ x_c \end{bmatrix} = \begin{bmatrix} \cos\theta & -\sin\theta \\ \cos(\theta - 2\pi/3) & -\sin(\theta - 2\pi/3) \\ \cos(\theta - 4\pi/3) & -\sin(\theta - 4\pi/3) \end{bmatrix} \cdot \begin{bmatrix} x_d \\ x_q \end{bmatrix}$$

Decomposition of space vector $\vec{x}$ into dq rotating reference frame.

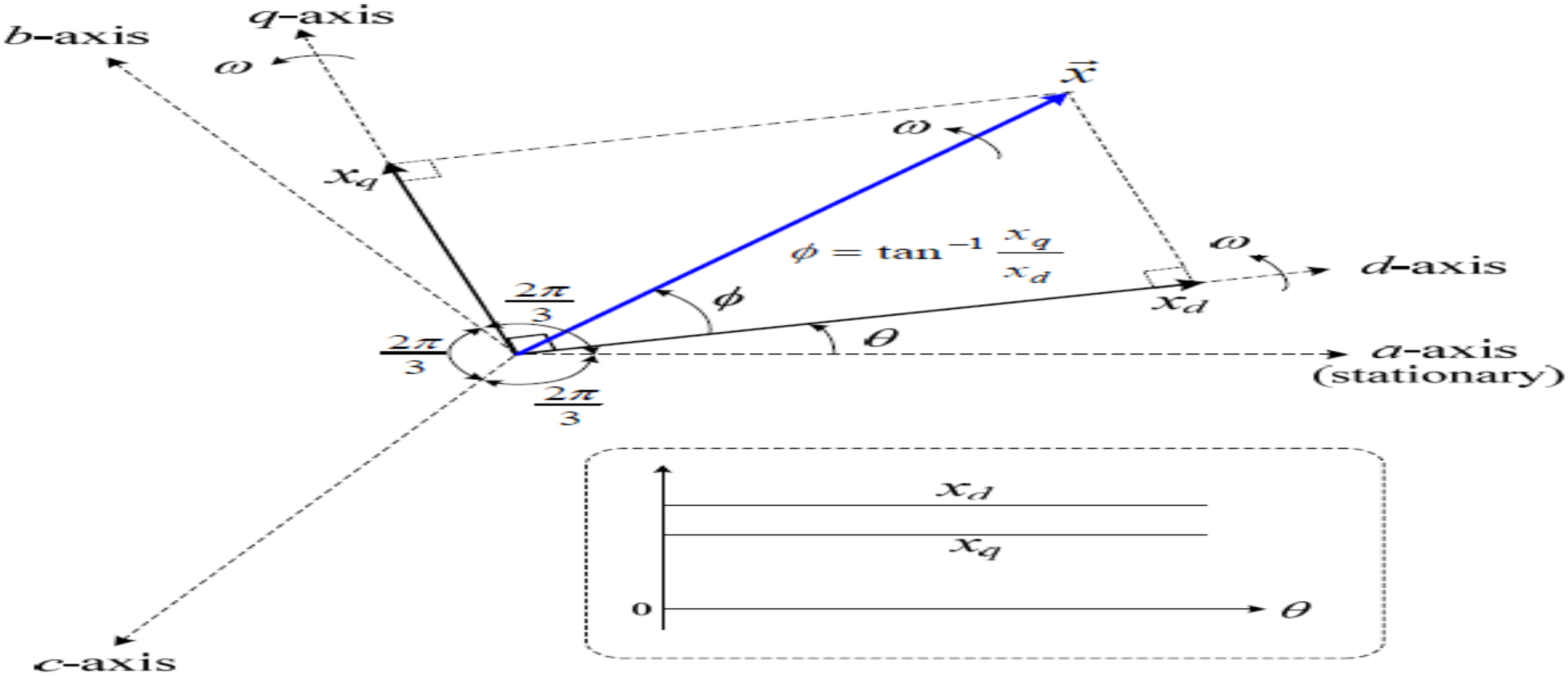

Assuming that $\vec{x}$ rotates at same speed as that of dq rotating reference frame.

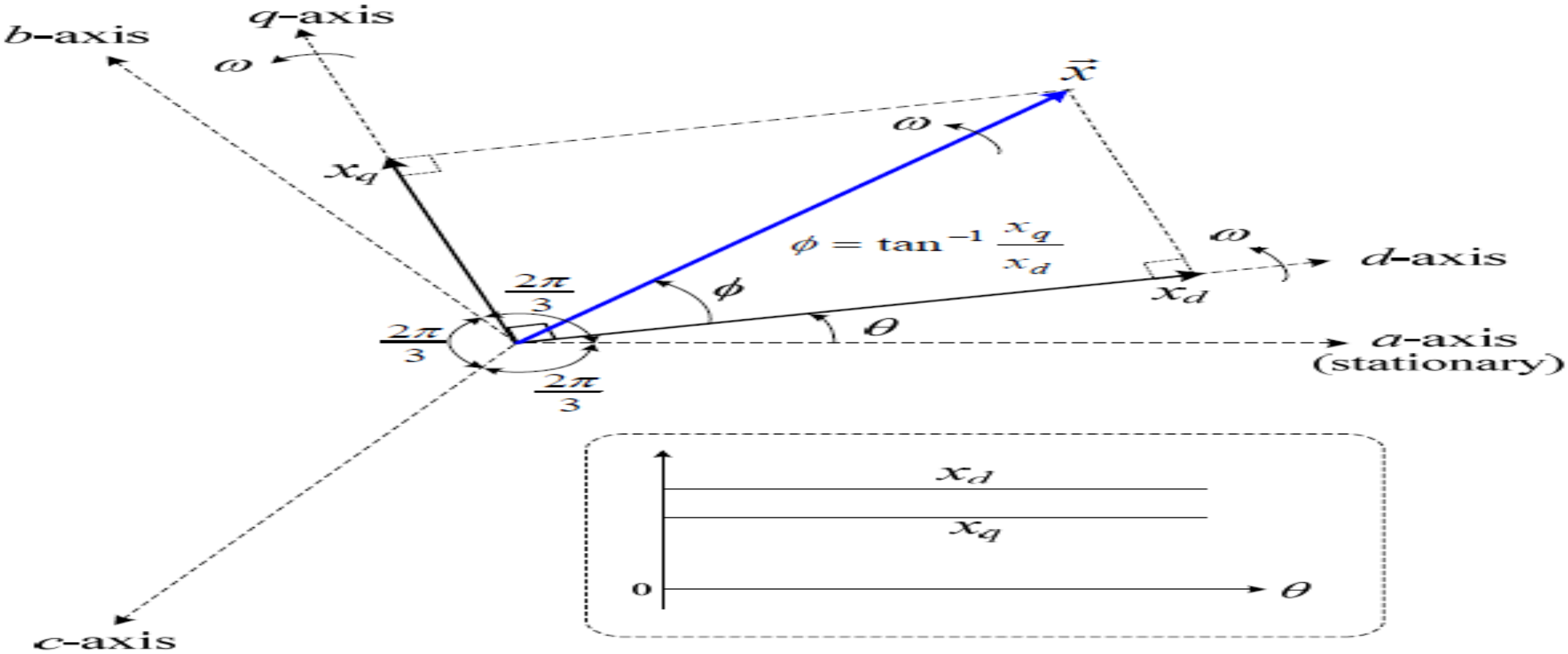

Vector angle ϕ between $\vec{x}$ & d-axis is constant.

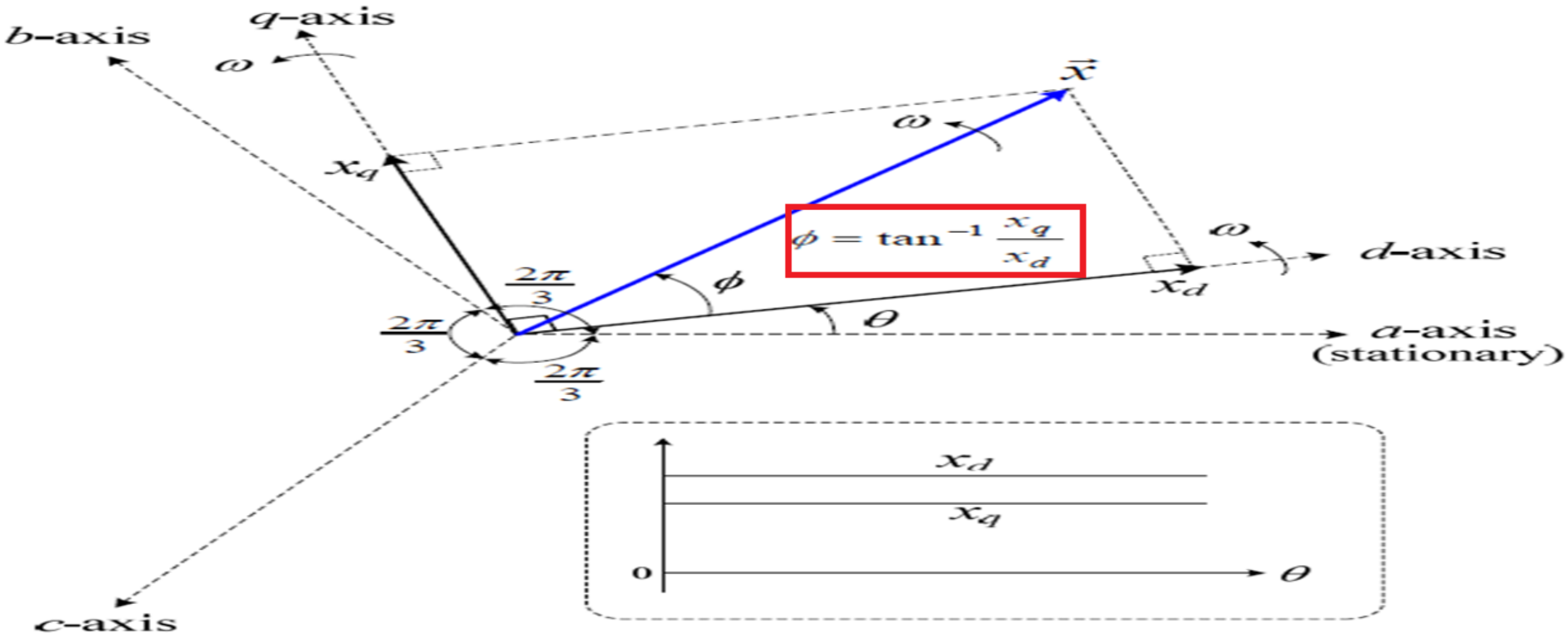

Resultant *dq*-axis components, x_d & x_q, are dc variables.

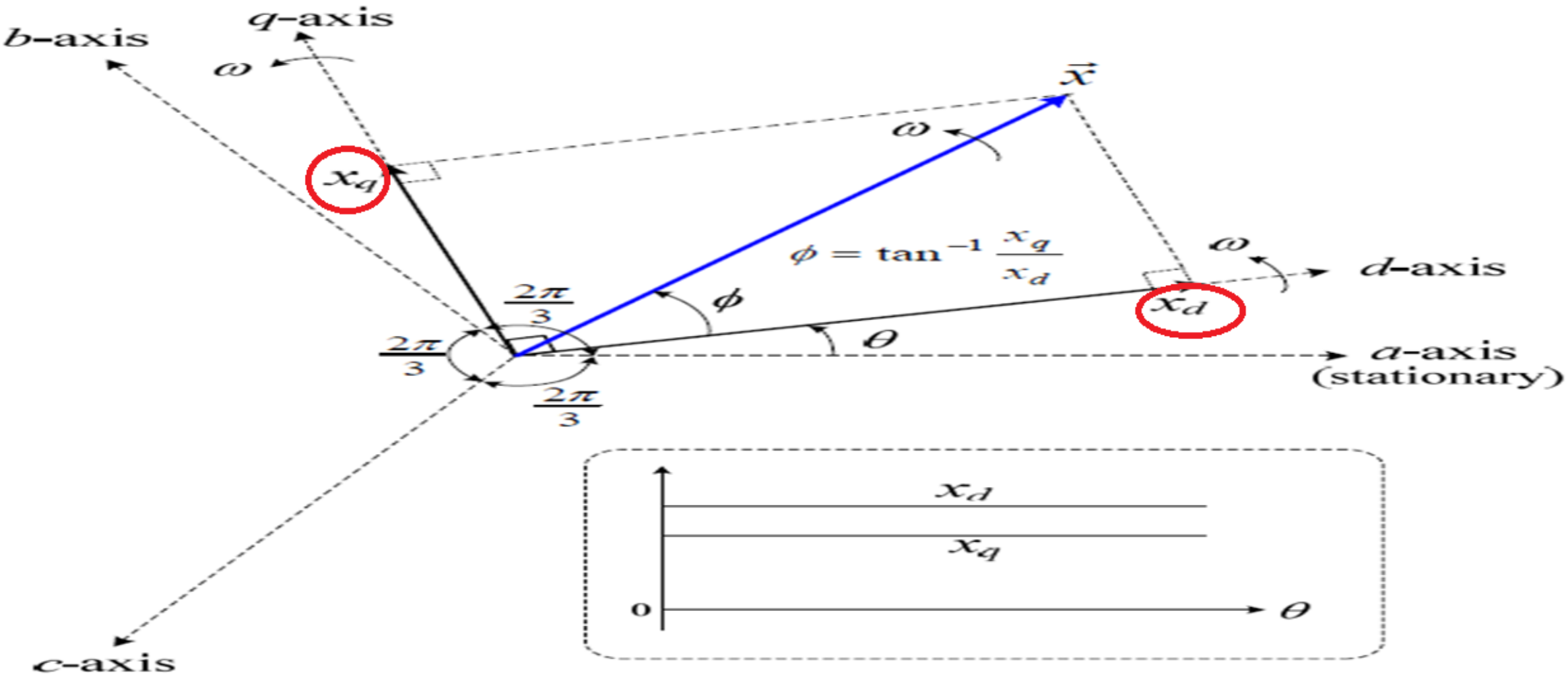

Hence 3-phase ac variables can be represented by 2-phase dc variables.

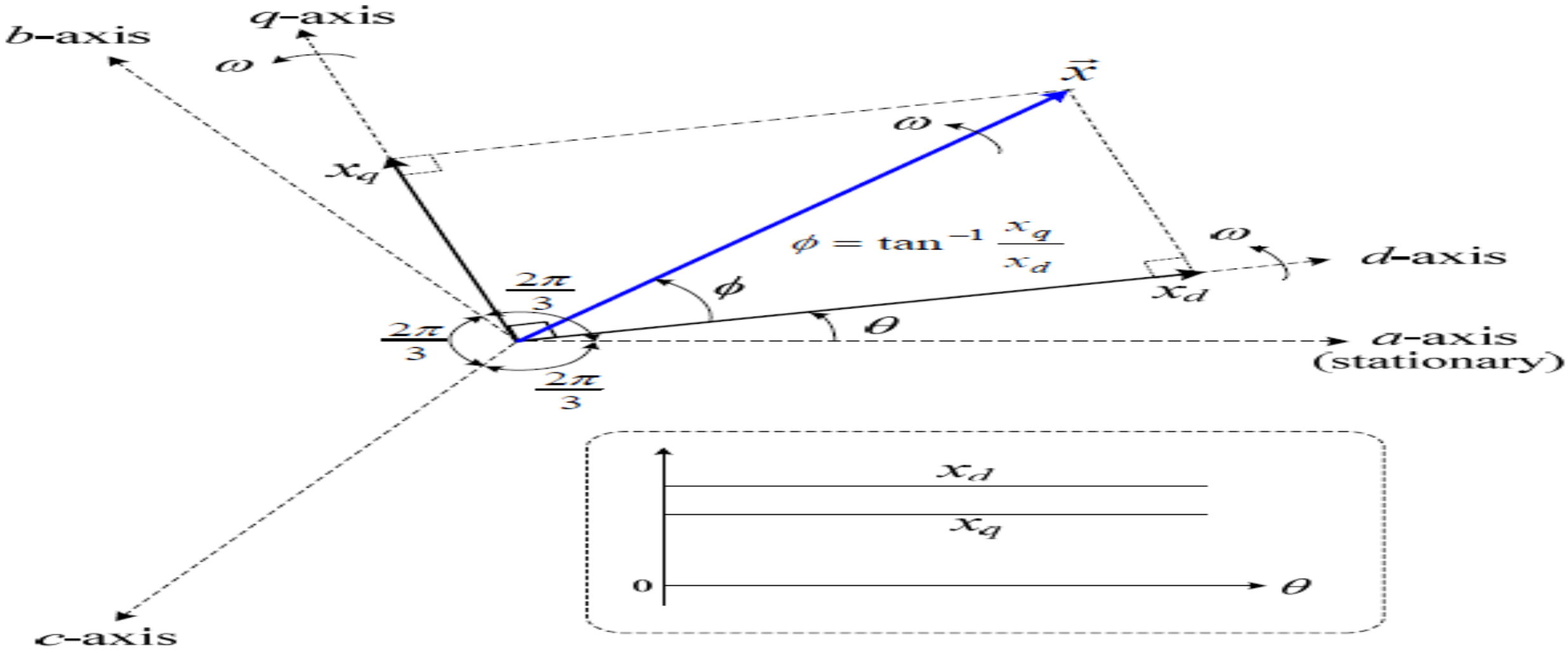

For control of wind energy systems, rotating speed of the arbitrary reference frame ω=ωs

- Synchronous speed ωs of an induction or synchronous generator, given by $\omega_s = 2\pi f_s$ & fs is stator frequency in [Hz].

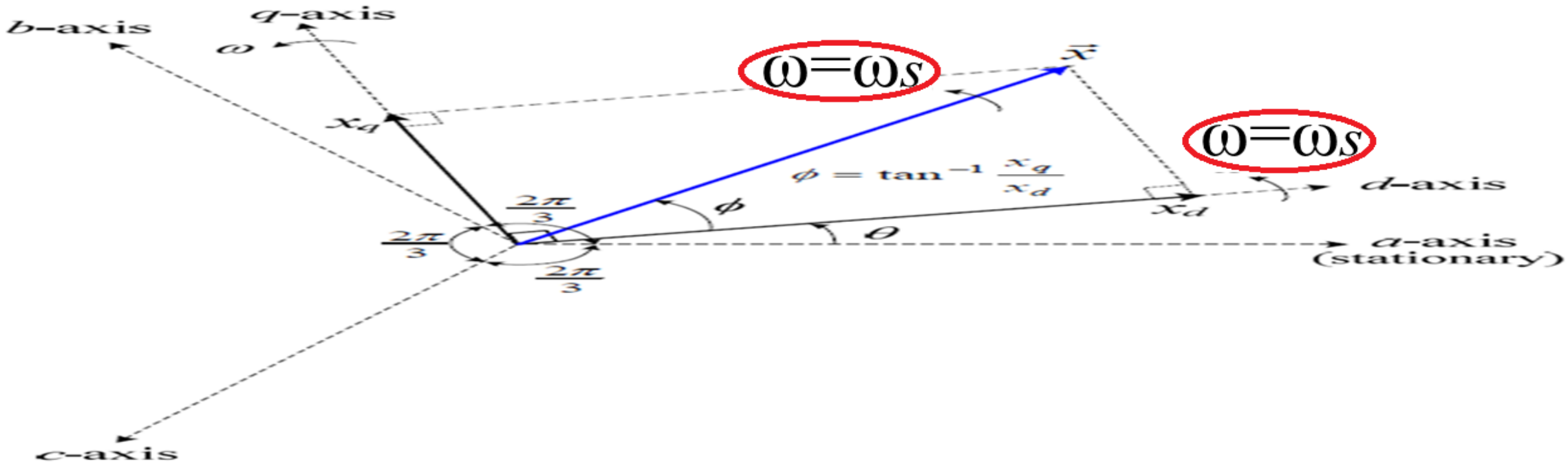

Angle θ can be found by integrating on both sides

$\omega = d\theta/dt$

$$\theta(t) = \int_0^t \omega_s(t)\,dt + \theta_0$$

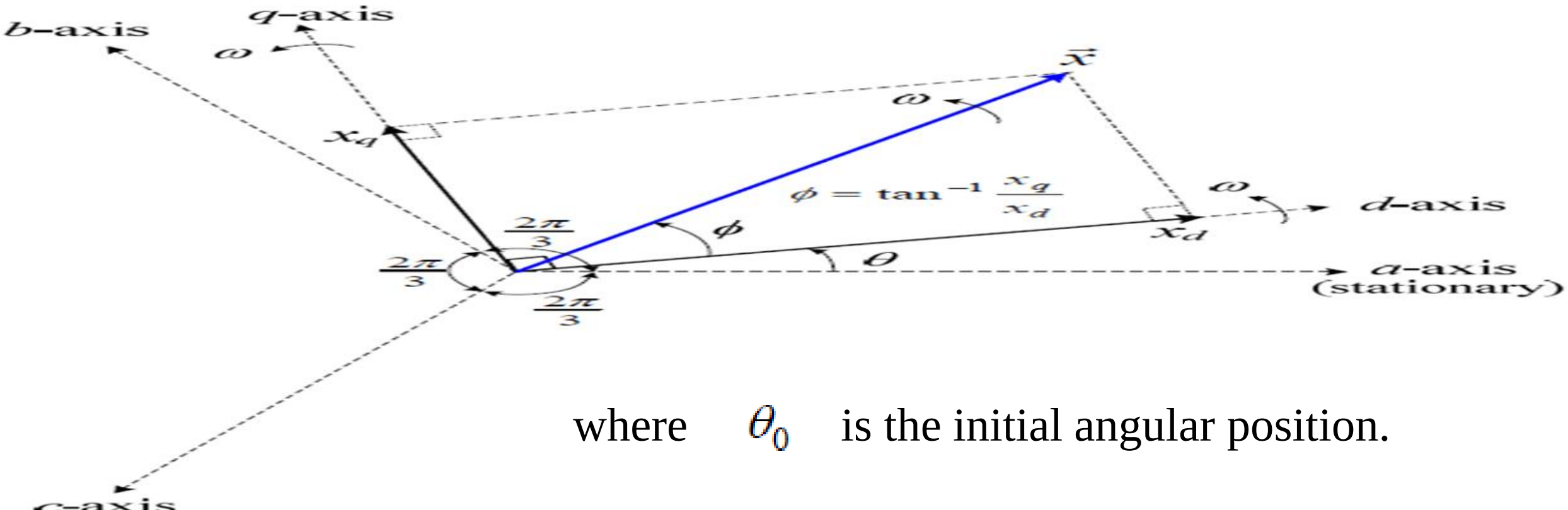

where θ_0 is the initial angular position.

3.2.2 *abc*/αβ Reference Frame Transformation

- Since αβ reference frame does not rotate in space, transformation can be obtained by setting $\theta = 0$,

$$\begin{bmatrix} x_d \\ x_q \end{bmatrix} = \frac{2}{3}\begin{bmatrix} \cos\theta & \cos(\theta - 2\pi/3) & \cos(\theta - 4\pi/3) \\ -\sin\theta & -\sin(\theta - 2\pi/3) & -\sin(\theta - 4\pi/3) \end{bmatrix} \cdot \begin{bmatrix} x_a \\ x_b \\ x_c \end{bmatrix}$$

from which

$$\begin{bmatrix} x_\alpha \\ x_\beta \end{bmatrix} = \frac{2}{3}\begin{bmatrix} 1 & -1/2 & -1/2 \\ 0 & \sqrt{3}/2 & -\sqrt{3}/2 \end{bmatrix} \cdot \begin{bmatrix} x_a \\ x_b \\ x_c \end{bmatrix}$$

αβ/*abc* transformation

Similarly, 2-phase to 3-phase transformation in stationary reference frame, known as αβ/*abc* transformation, can be performed by:

$$\begin{bmatrix} x_a \\ x_b \\ x_c \end{bmatrix} = \begin{bmatrix} 1 & 0 \\ -1/2 & \sqrt{3}/2 \\ -1/2 & -\sqrt{3}/2 \end{bmatrix} \cdot \begin{bmatrix} x_\alpha \\ x_\beta \end{bmatrix}$$

3.3 Induction Generator Models

3.3.1 Construction

There are **02 main types of induction generators** in wind energy industry:

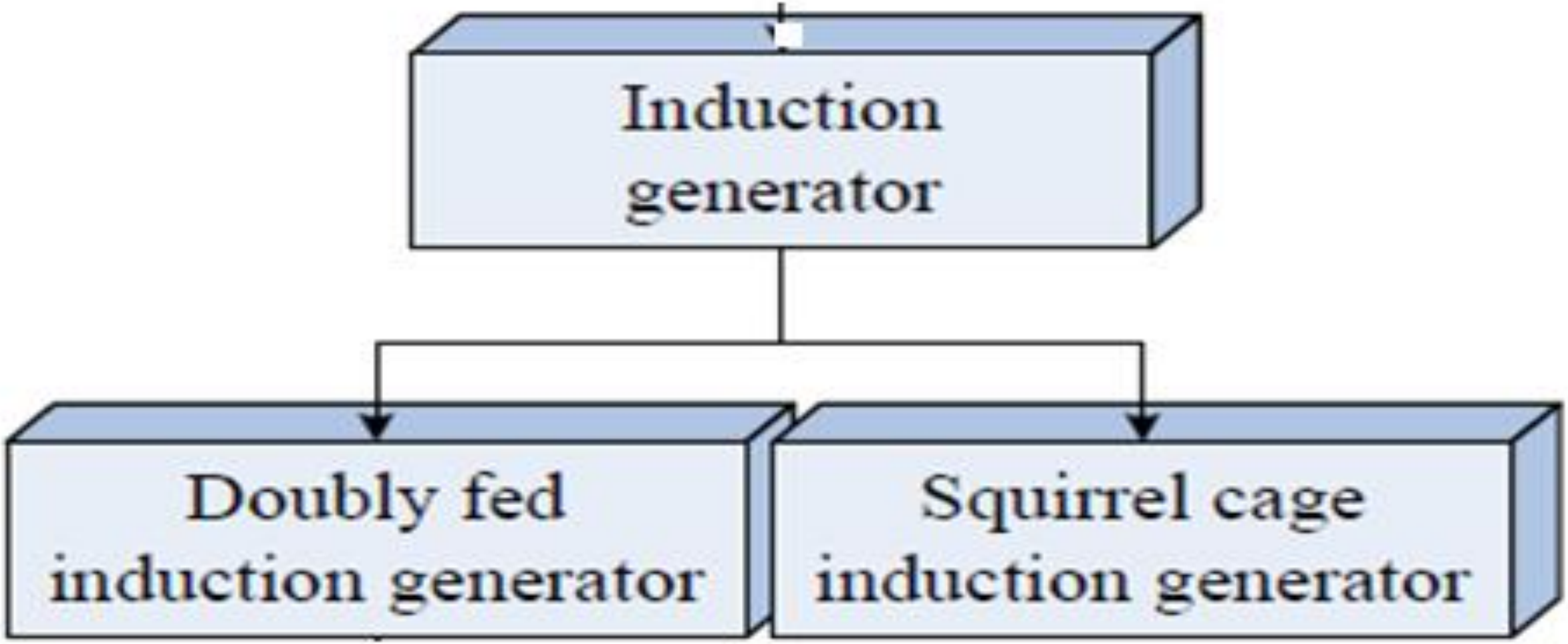

Doubly Fed Induction Generator (DFIG) & Squirrel Cage Induction Generator (SCIG) have same stator structure

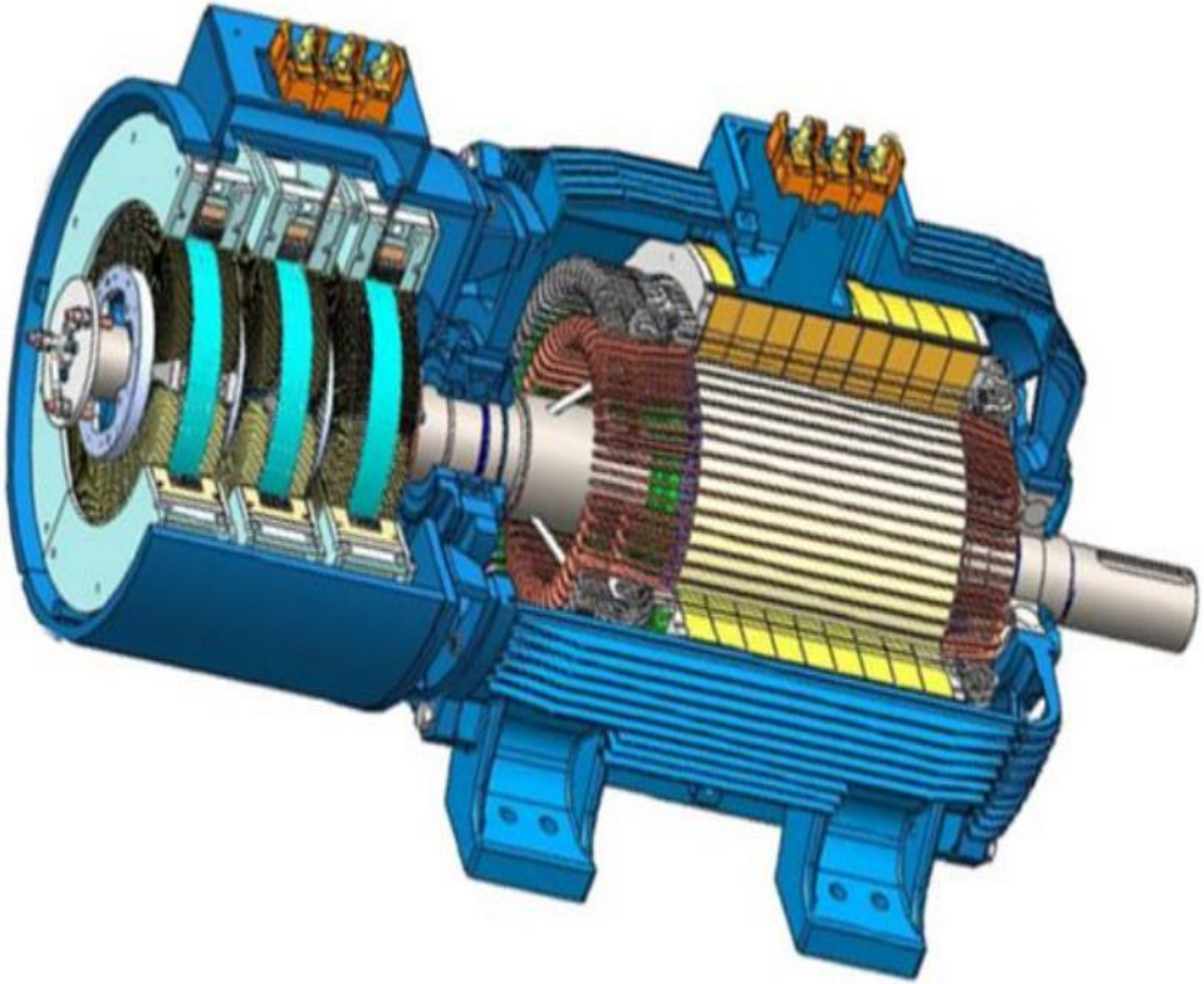

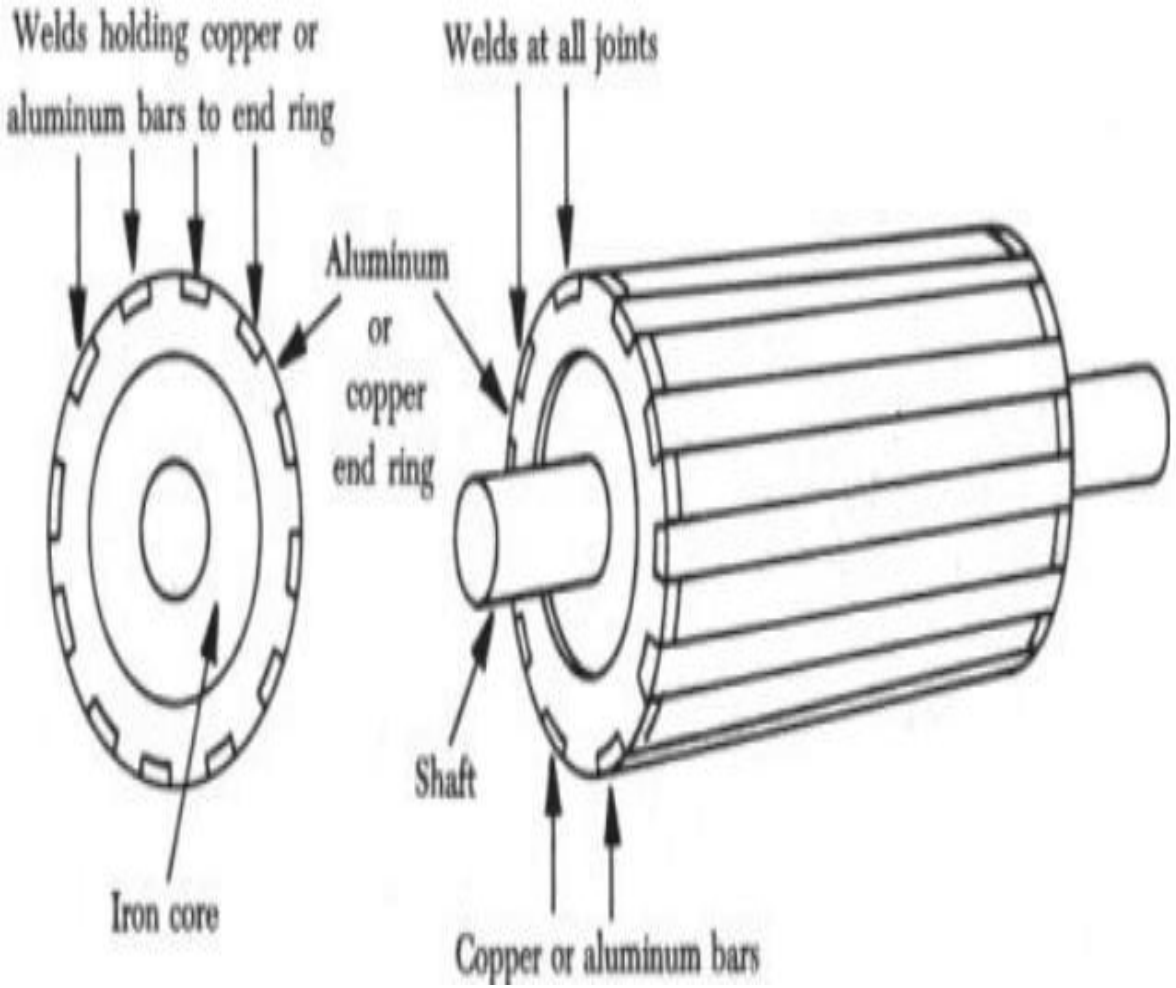

Doubly Fed Induction Generator (DFIG) & Squirrel Cage Induction Generator (SCIG) have same Rotor structure?

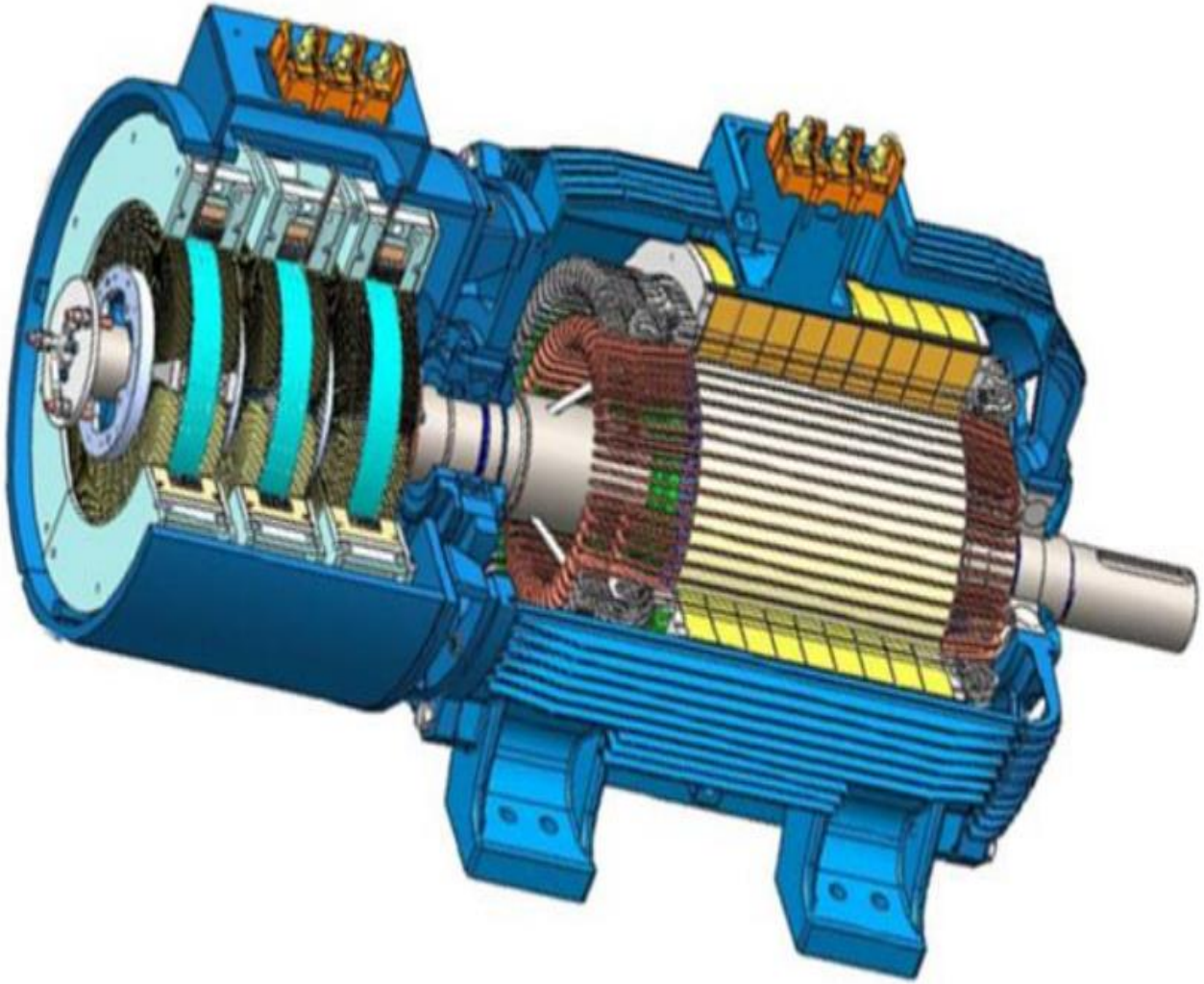

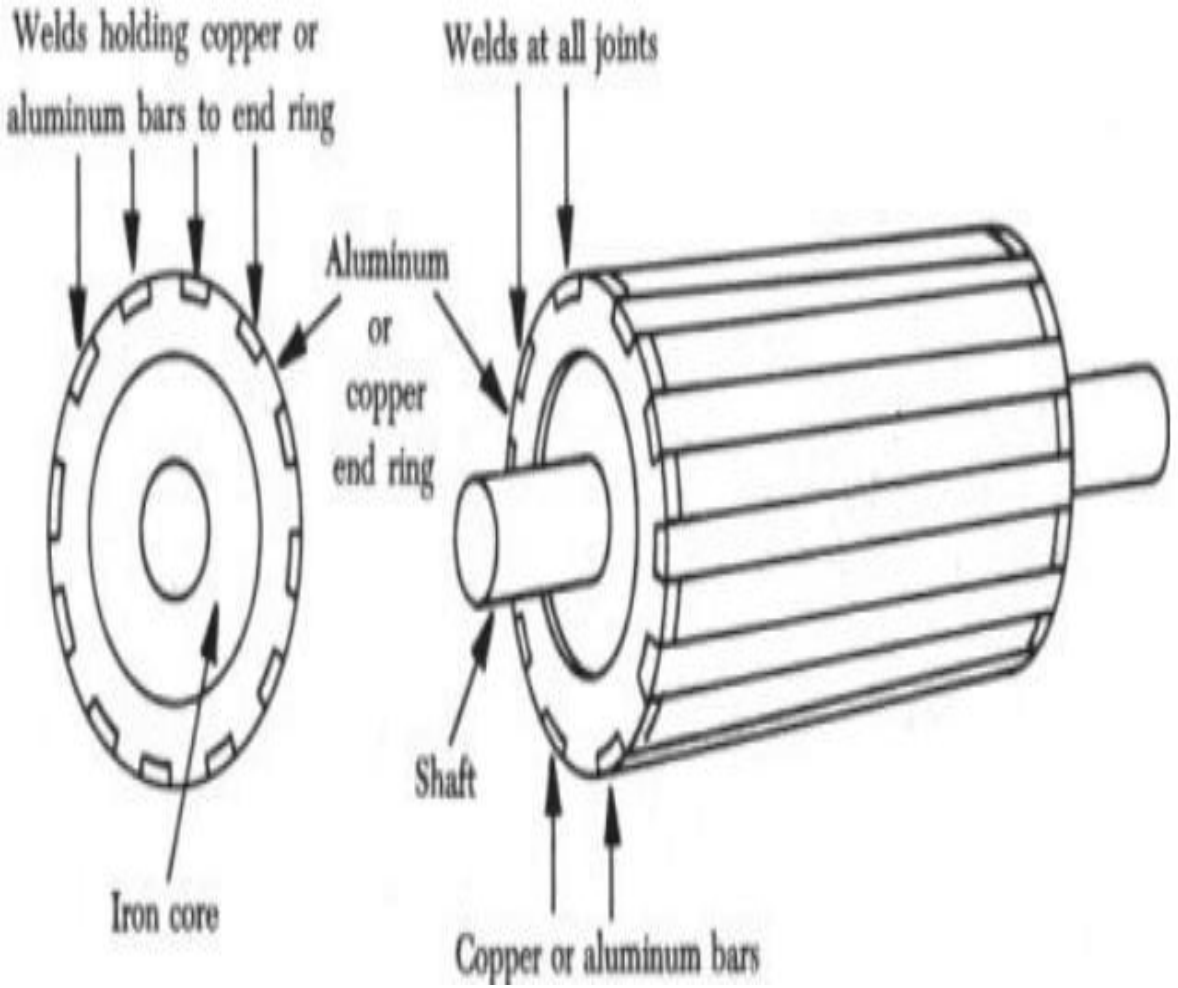

Doubly Fed Induction Generator (DFIG) & Squirrel Cage Induction Generator (SCIG) have difference in rotor structure.

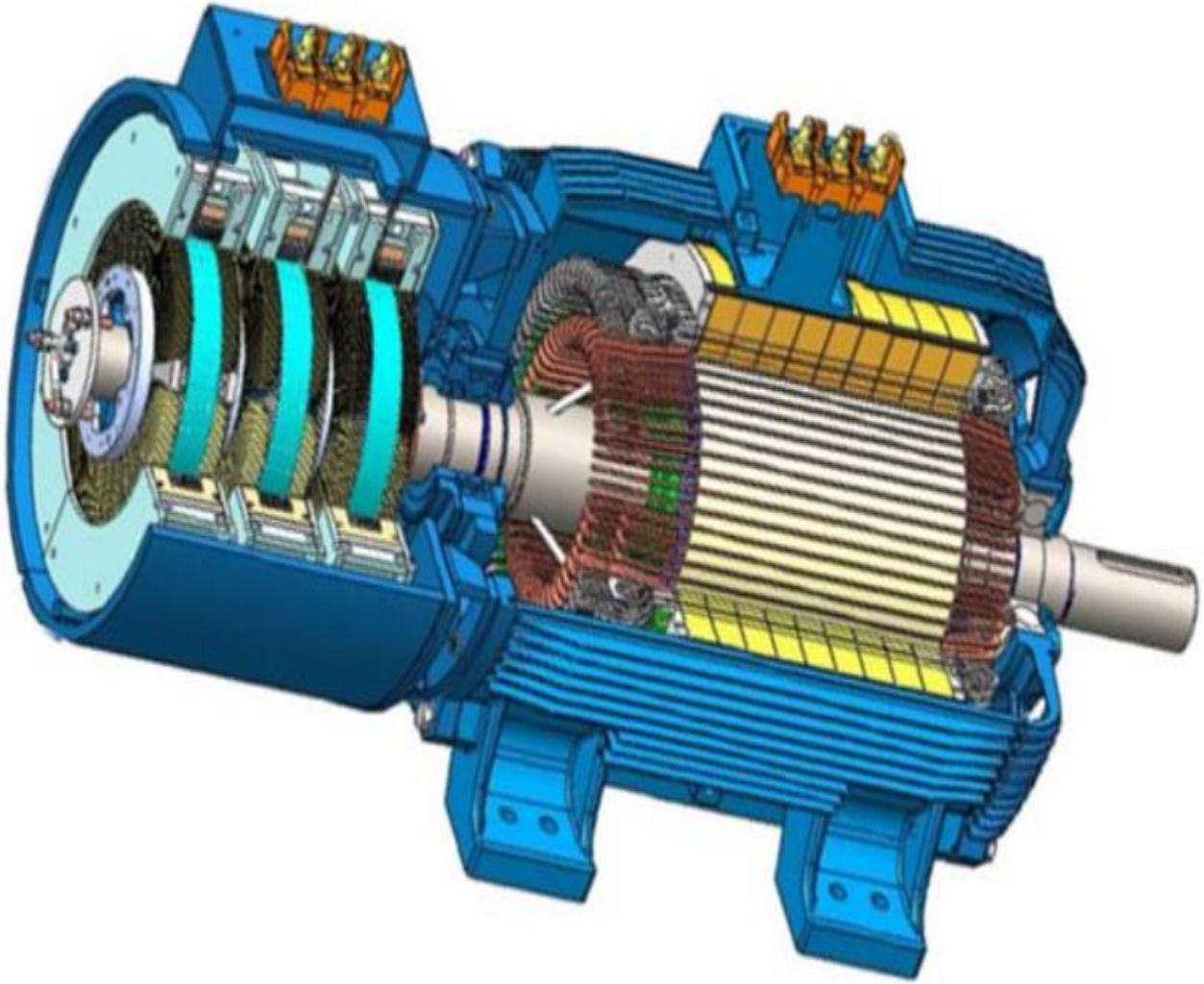

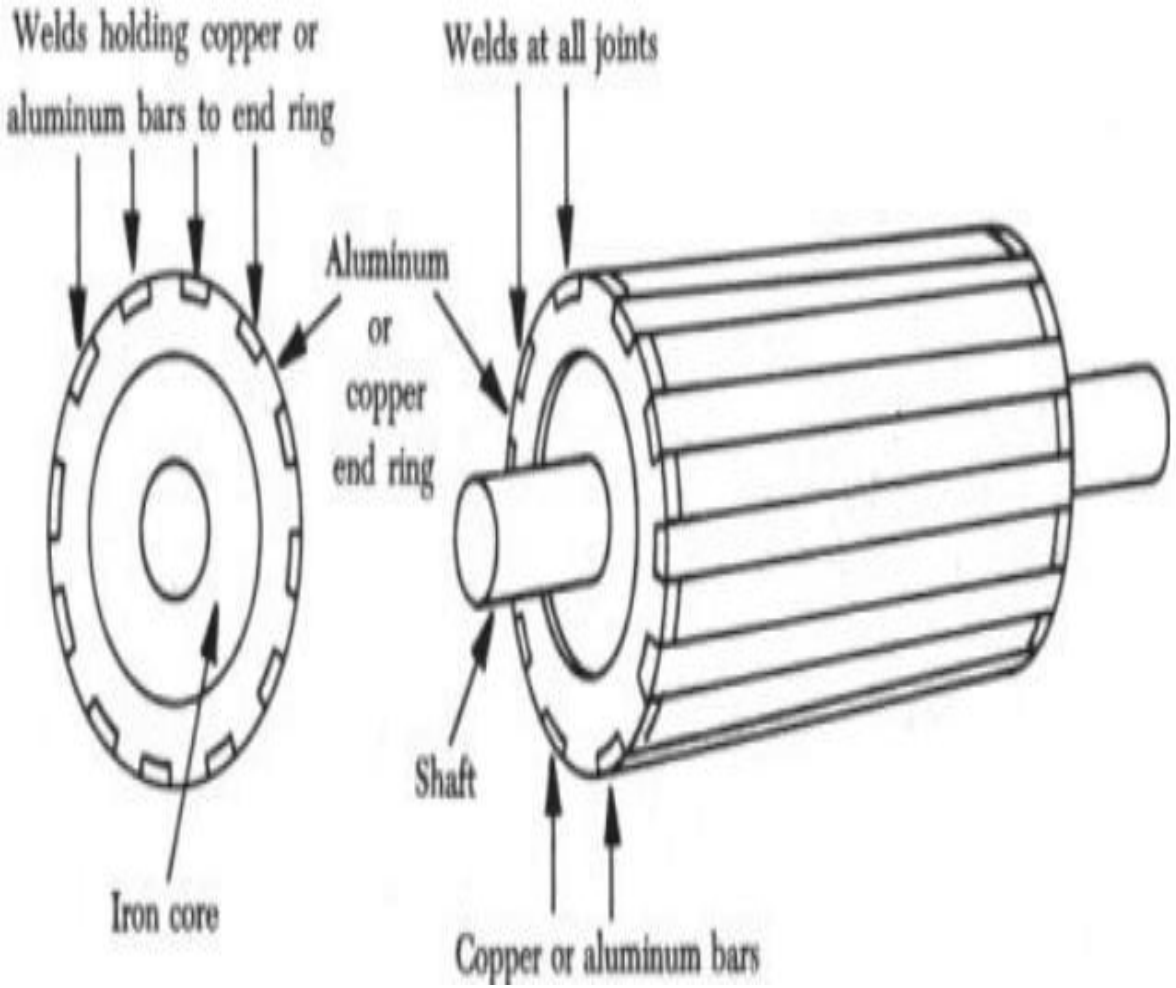

Stator is made of thin silicon steel laminations.

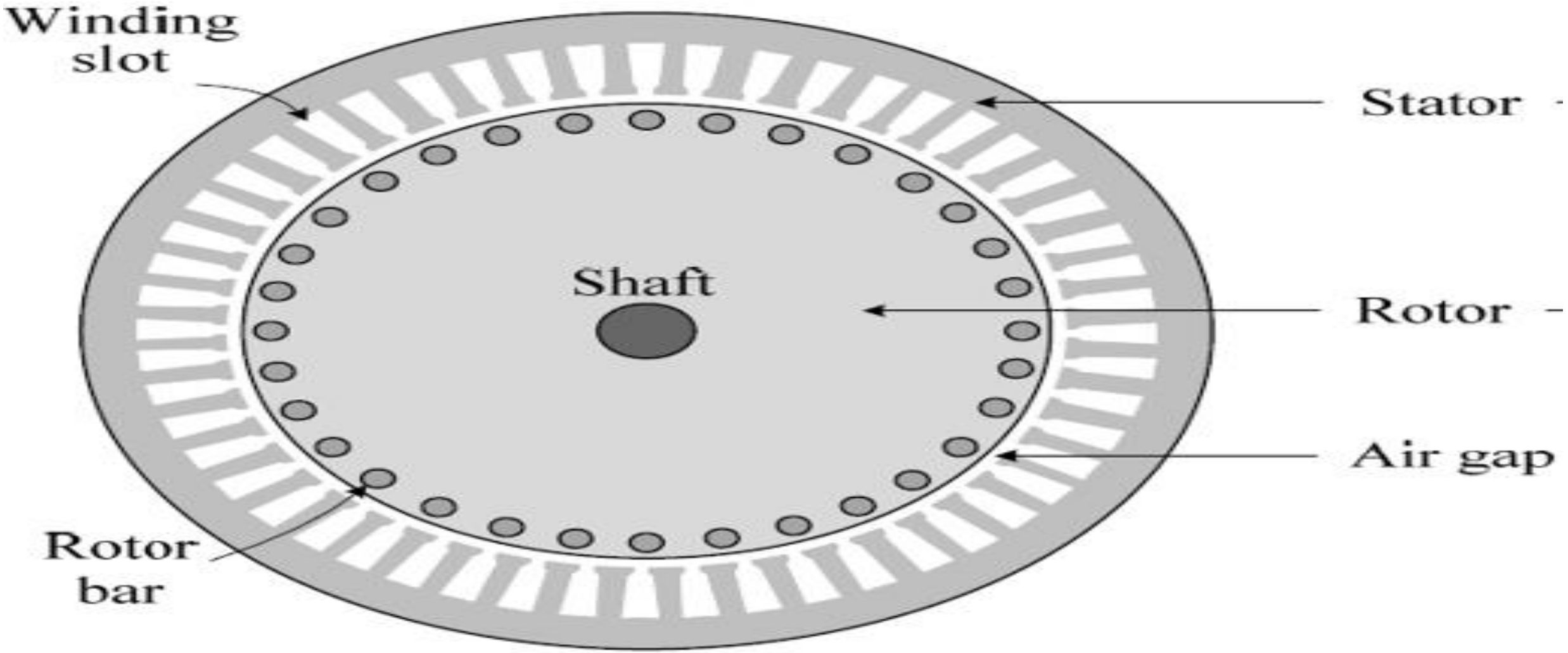

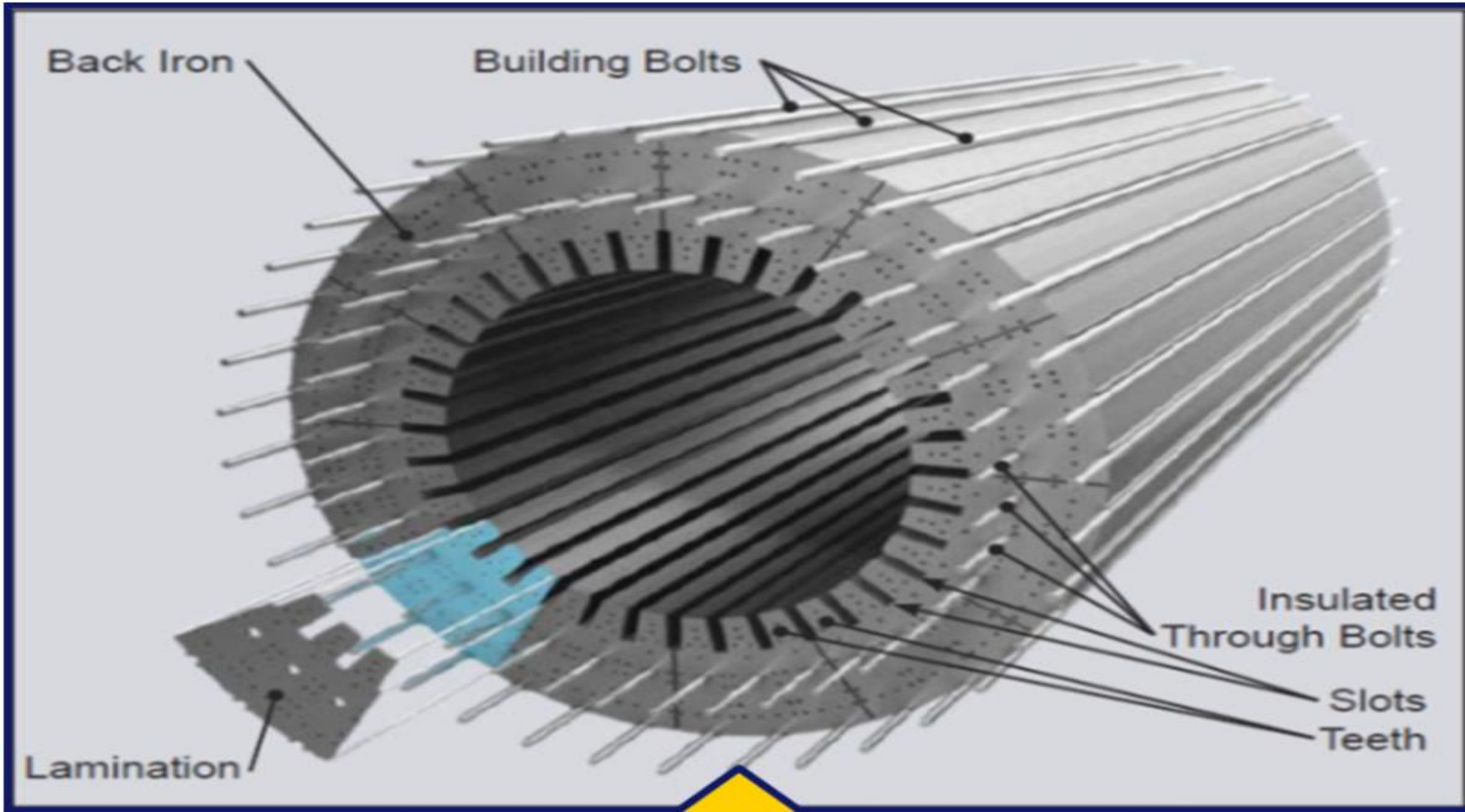
Back Iron
Building Bolts
Insulated
Through Bolts
Slots
Teeth
Lamination

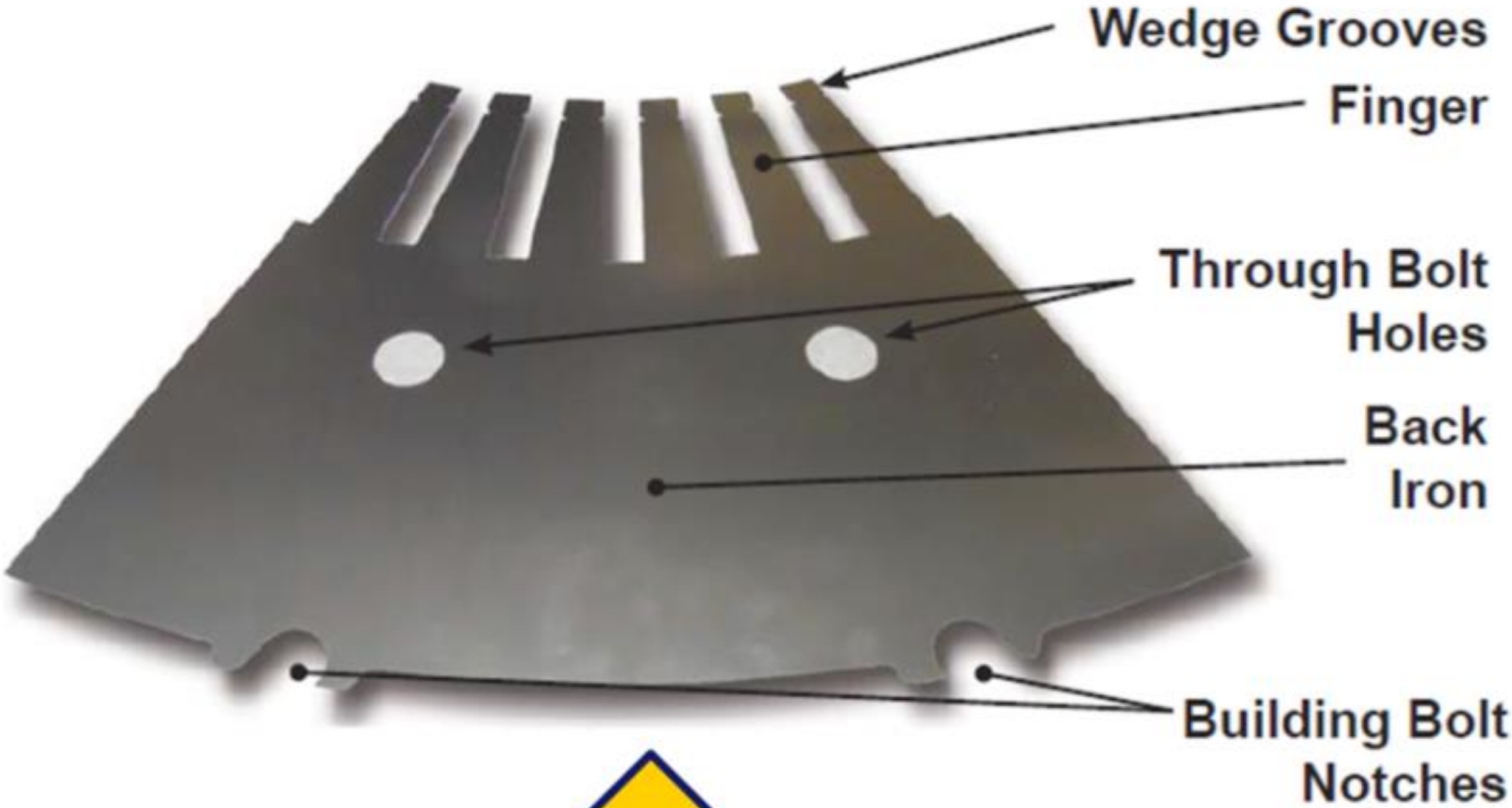
Wedge Grooves
Finger
Through Bolt Holes
Back Iron
Building Bolt Notches

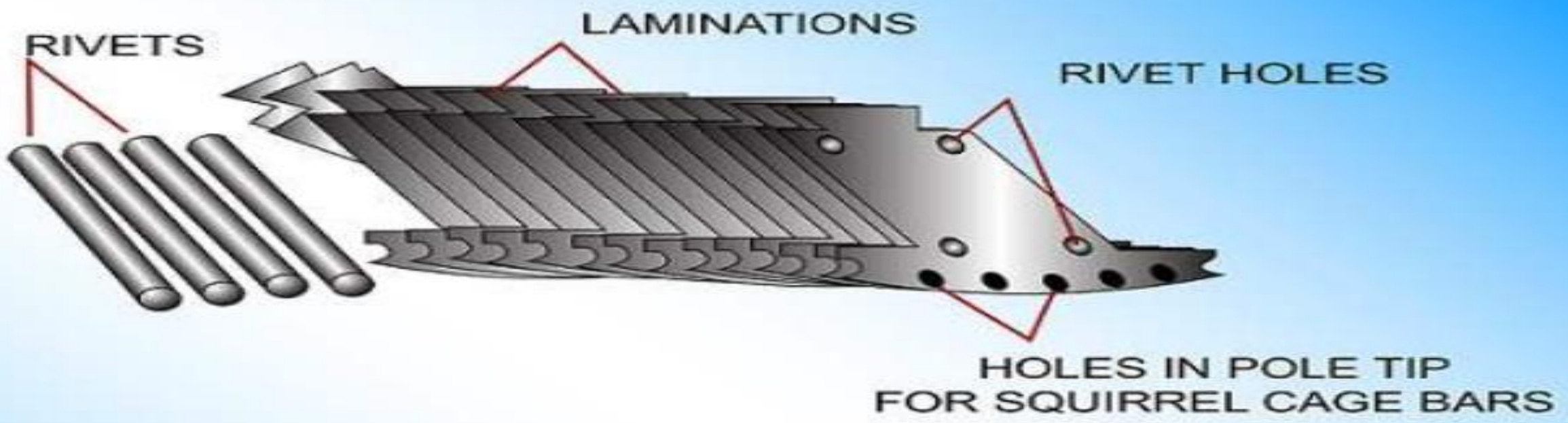
RIVETS
LAMINATIONS
RIVET HOLES
HOLES IN POLE TIP
FOR SQUIRREL CAGE BARS

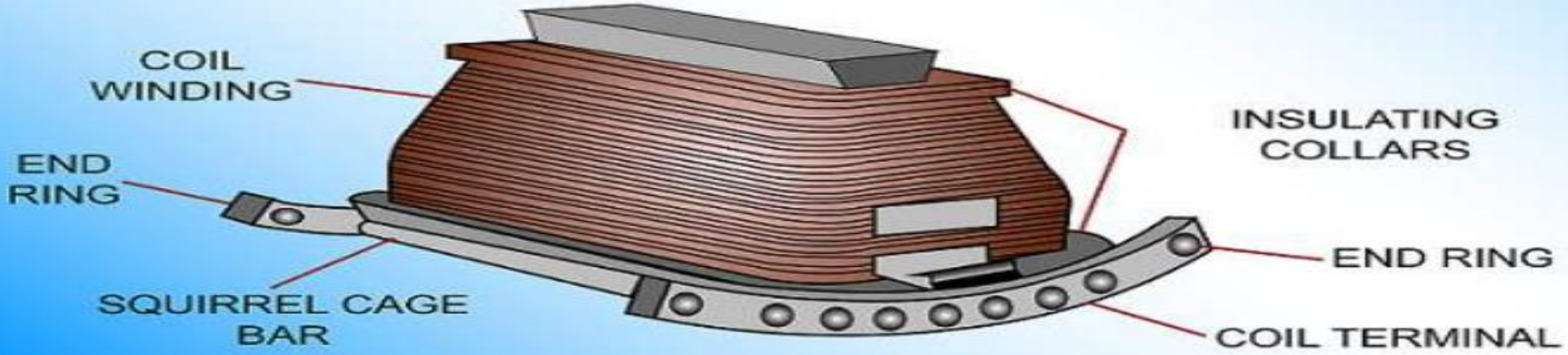
COIL
WINDING
END
RING
SQUIRREL CAGE
BAR
INSULATING
COLLARS
END RING
COIL TERMINAL

Laminations are insulated to minimize **iron losses** caused by induced eddy currents.

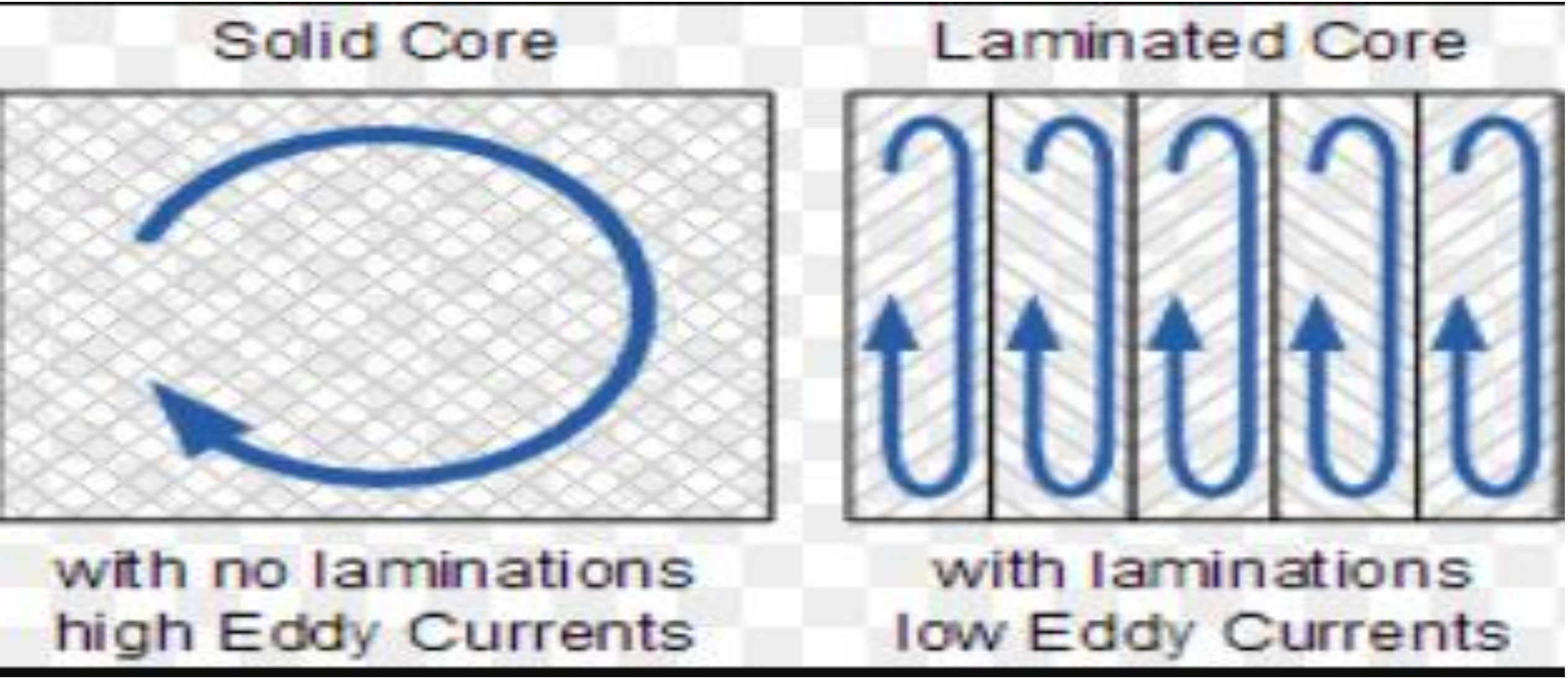

Laminations are basically flat rings with openings disposed along inner perimeter of ring.

When laminations are stacked together with openings aligned, a canal is formed, in which a 3-phase copper winding is placed.

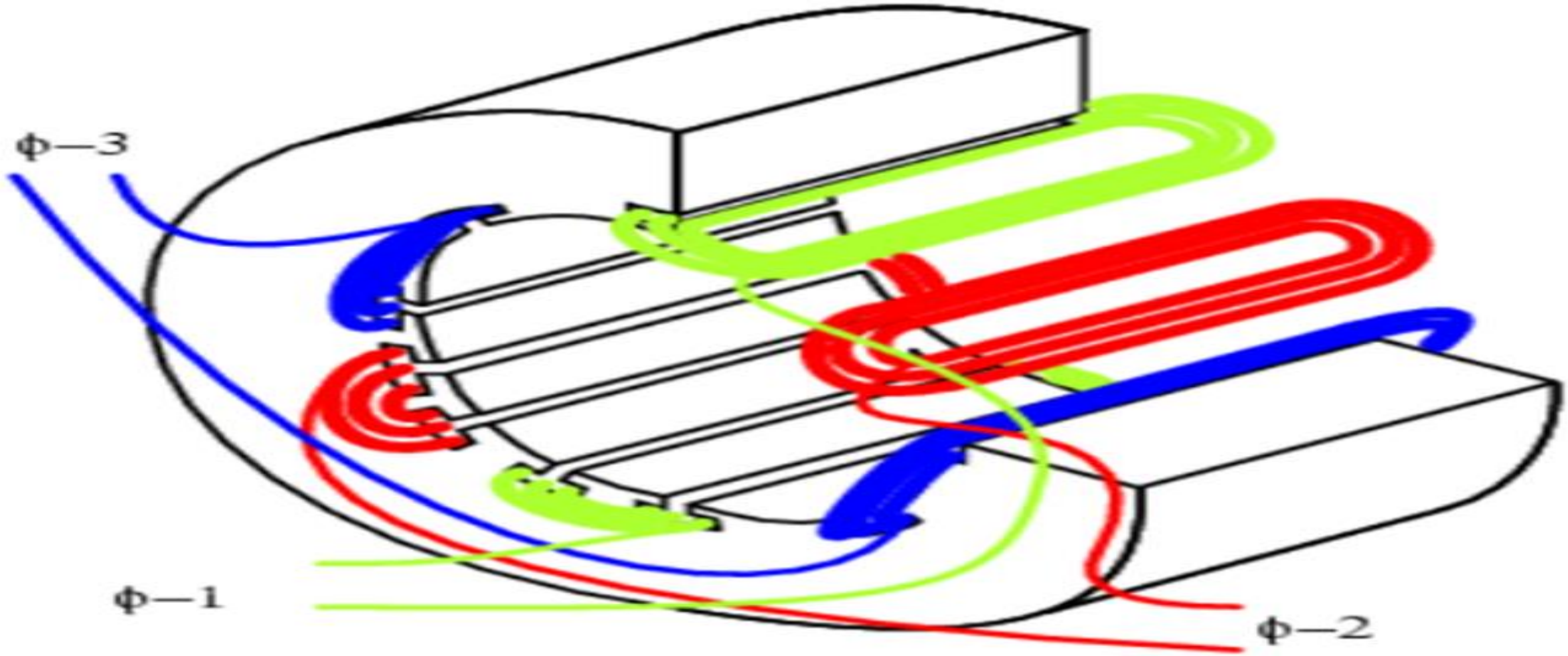

Rotor of SCIG is composed of laminated core & rotor bars.

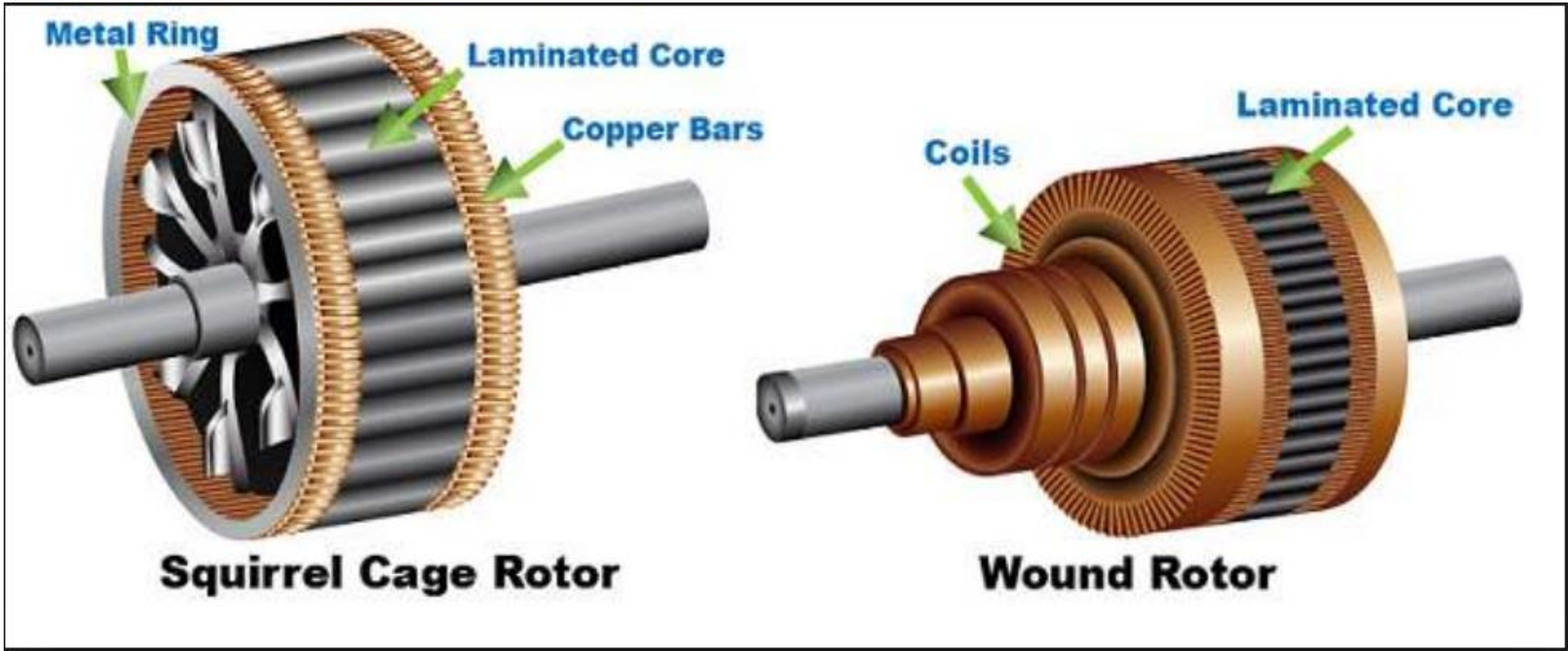

Rotor bars are embedded in slots inside rotor laminations & are shorted on both ends by end rings.

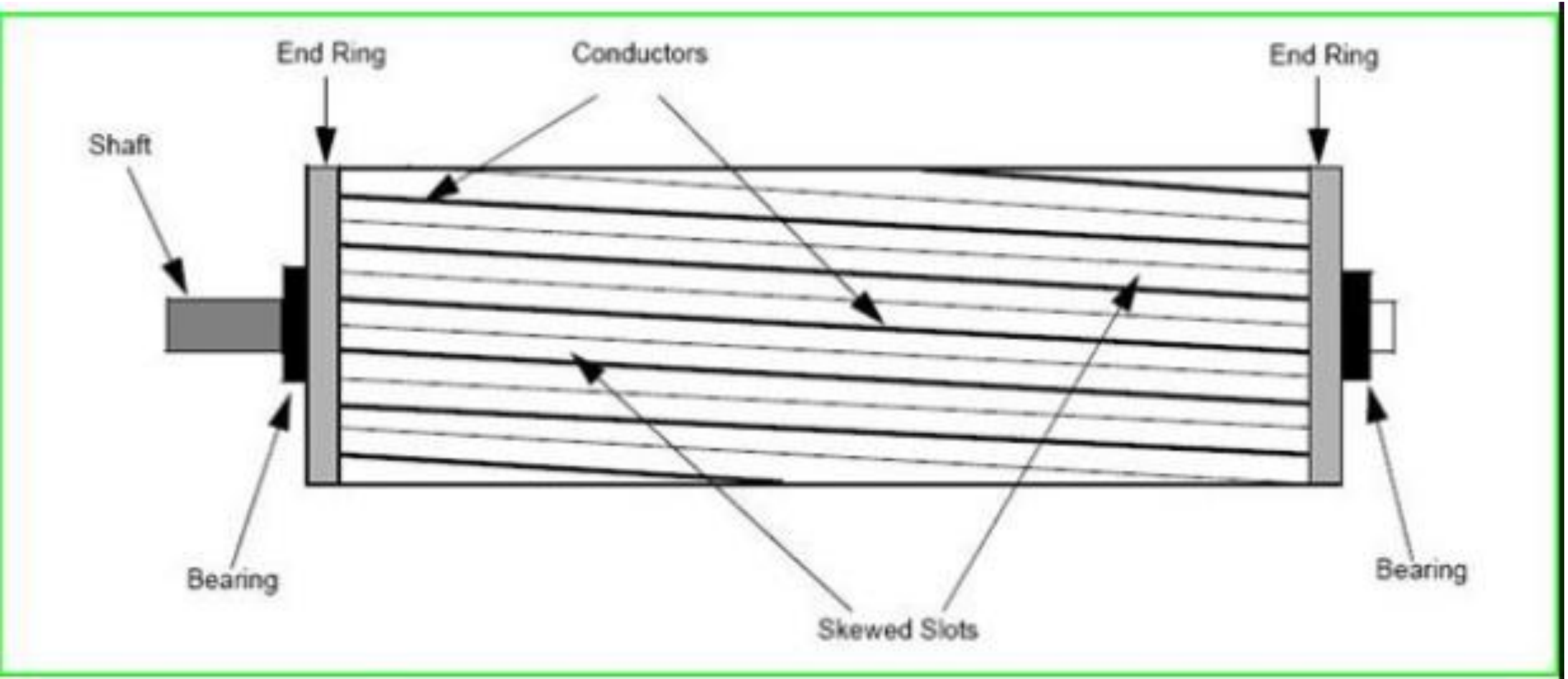

When stator winding is connected to a 3-phase supply, a rotating magnetic field is generated in air gap. Rotating field induces a 3-phase voltage in rotor bars.

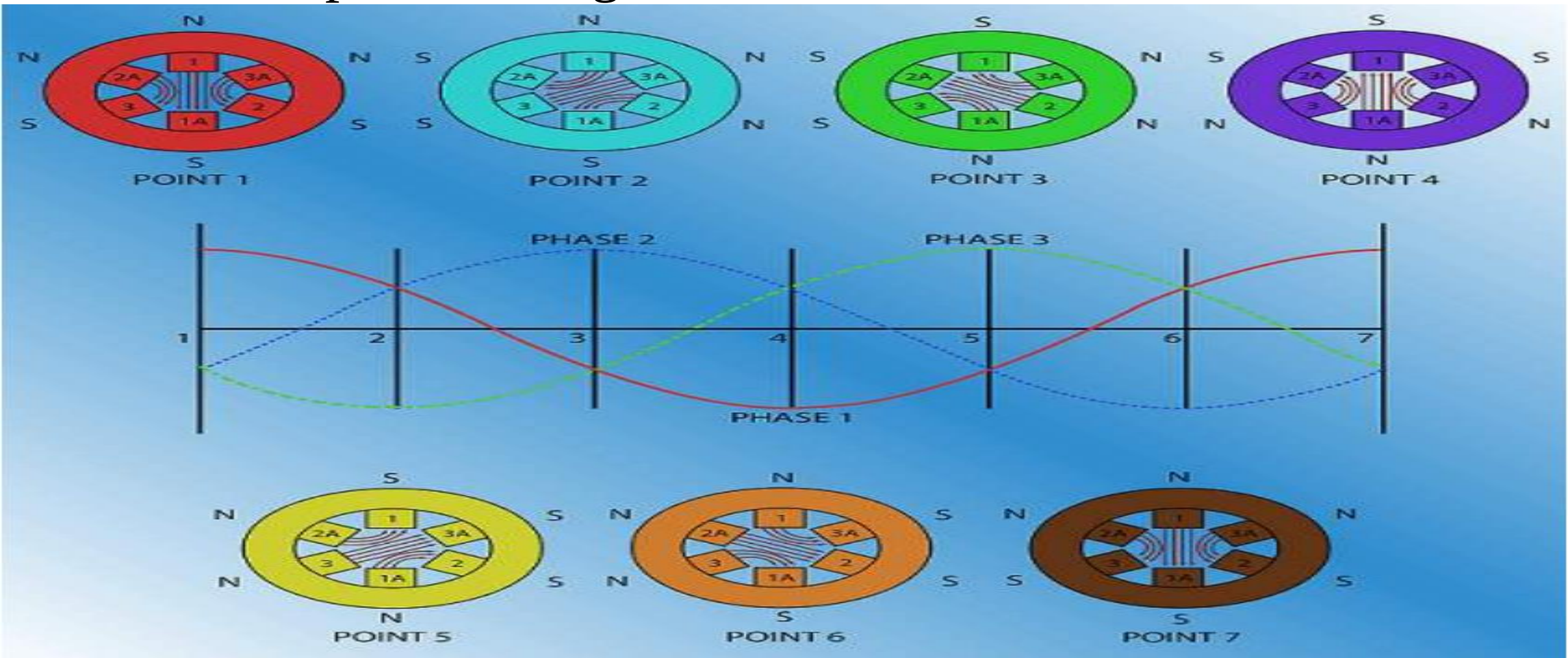

Since rotor bars are shorted, induced rotor voltage produces a rotor current, which interacts with rotating field to produce electromagnetic torque.

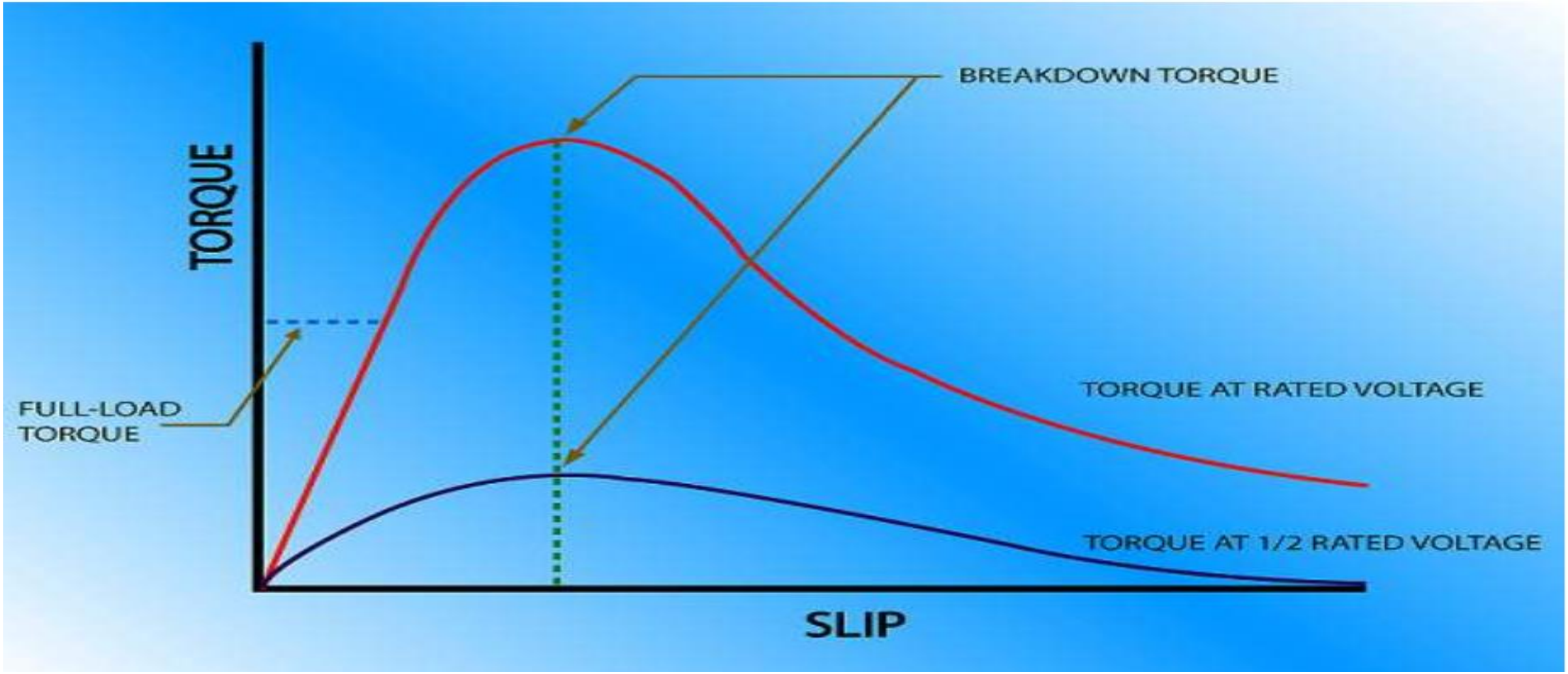

Rotor of DFIG has a 3-phase winding similar to stator winding.

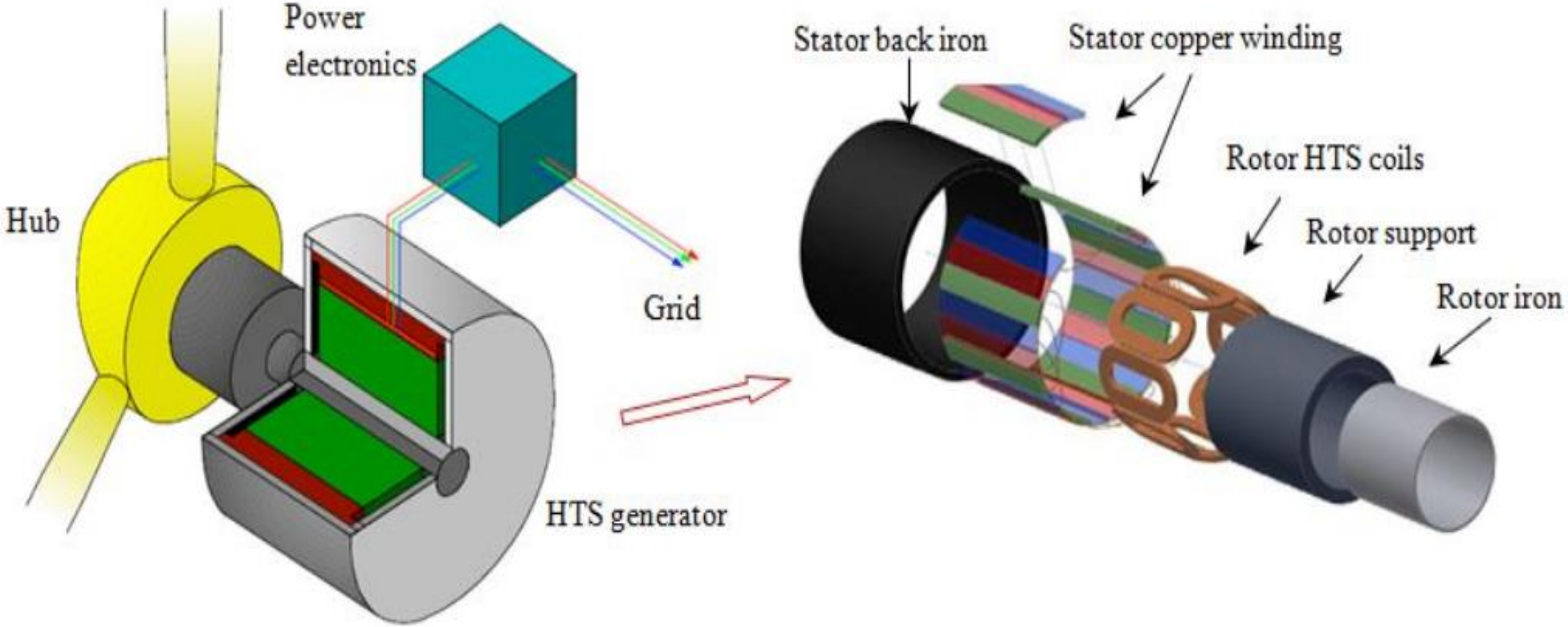

Rotor winding is embedded in rotor laminations but in exterior perimeter.

Rotor winding is fed through slip-rings mounted on rotor shaft.

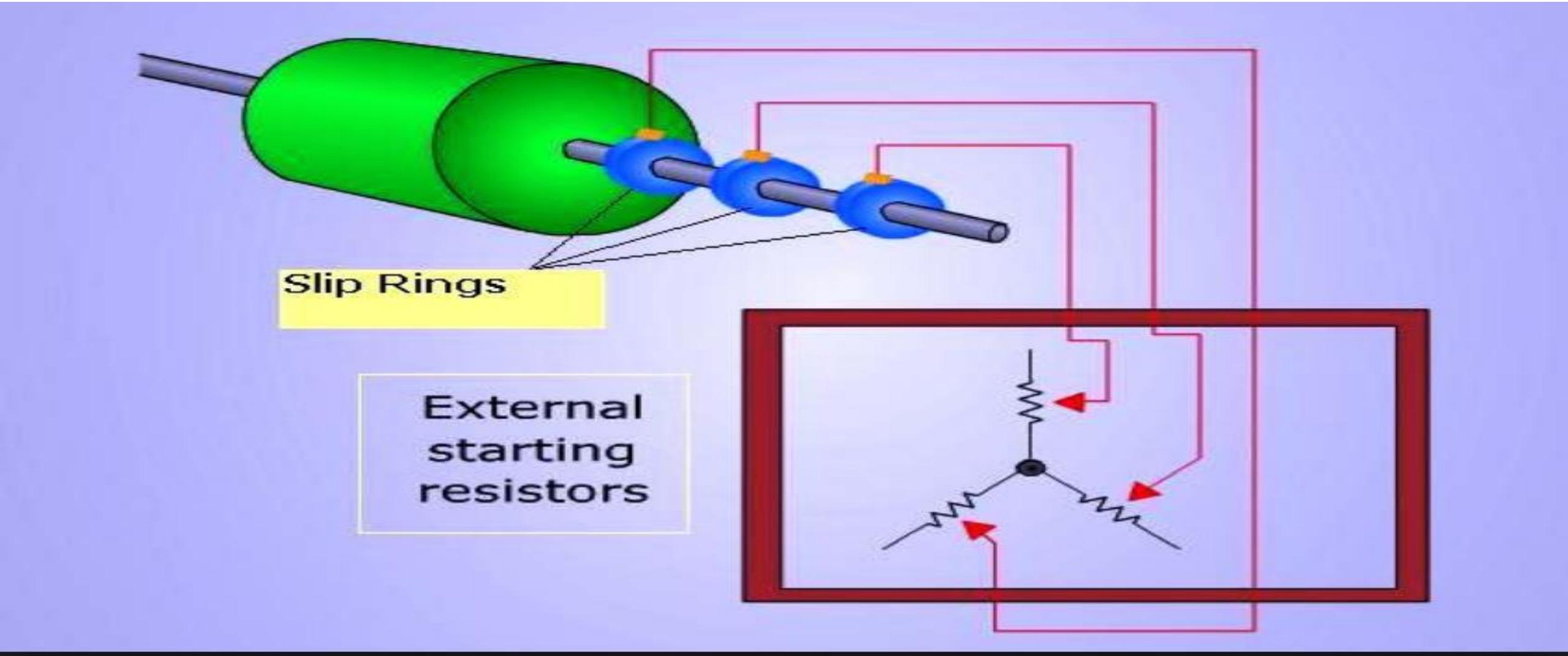

Rotor winding is connected to a power converter system that makes rotor speed adjustable.

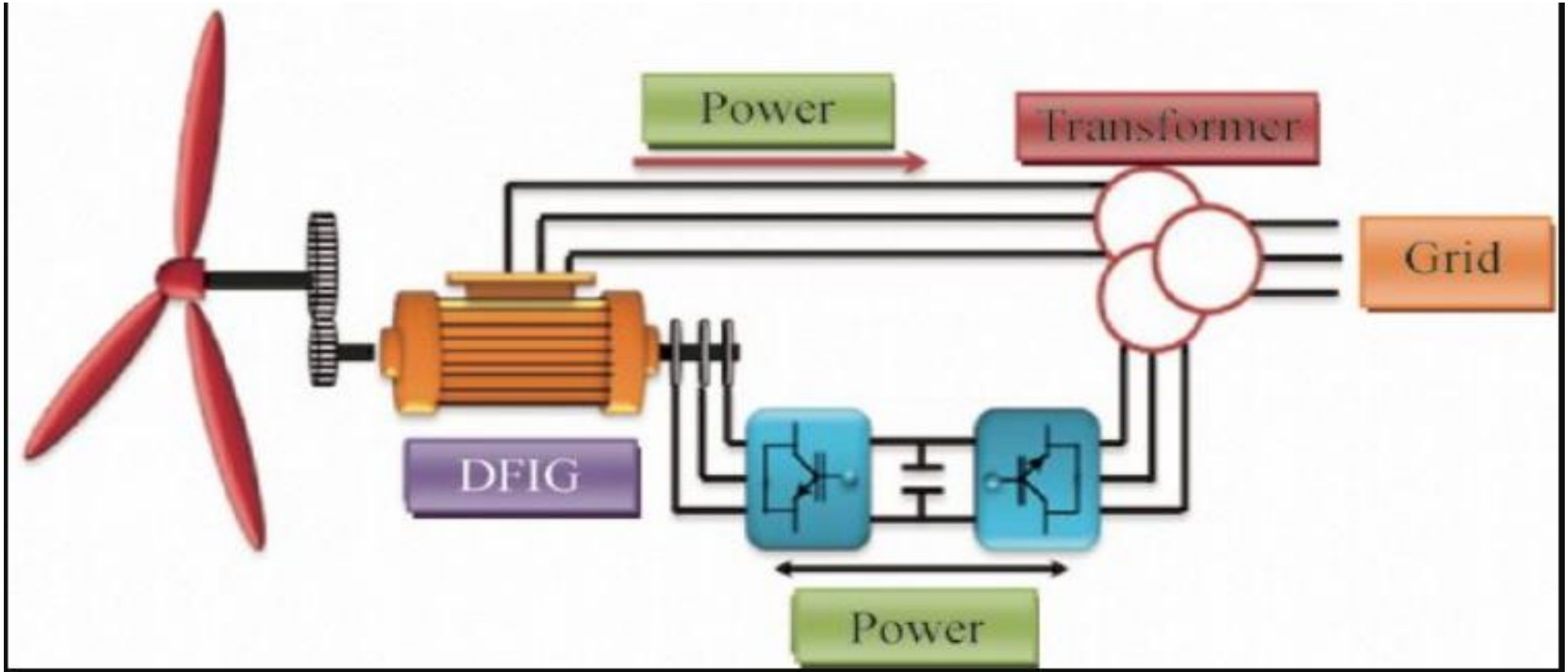

A simplified diagram for induction generator

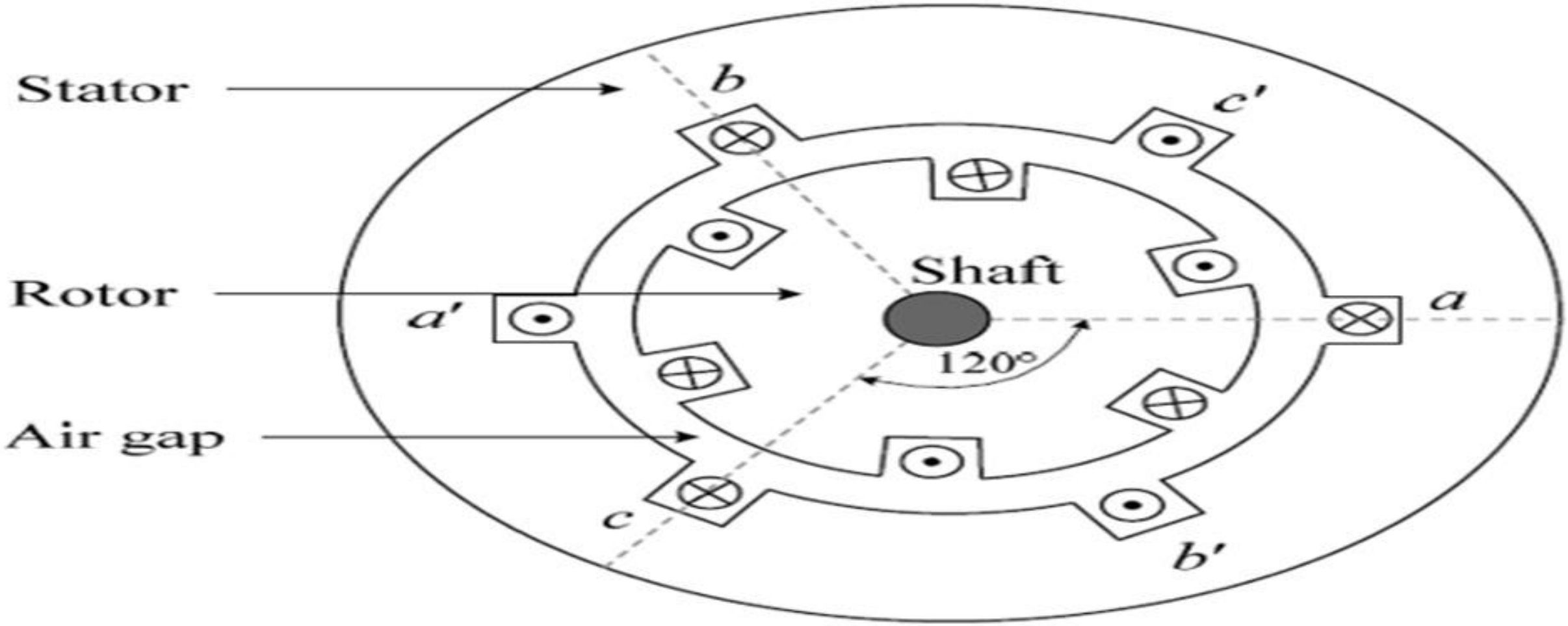

Multiple coils in stator & multiple bars in rotor are grouped & represented by a single coil for each phase.

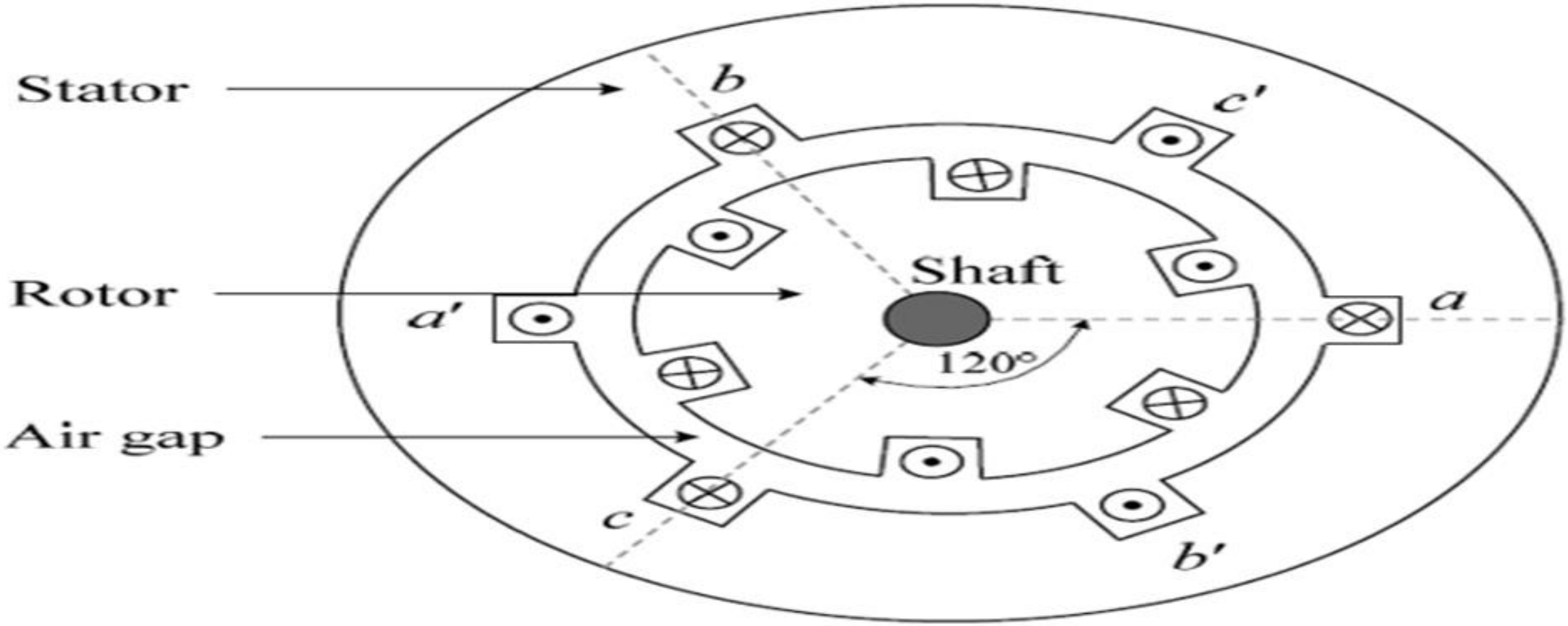

Dynamic models for induction generator

1. One is based on space vector theory called space vector model

2. Other is the *dq* axis model derived from space vector model called *dq*-frame model

Space vector model versus *dq*-frame model

- Space vector model features compact mathematical expressions &
- a single equivalent circuit but requires complex (real and imaginary part) variables.

- dq-frame model is composed of 02 equivalent circuits,
- one for d & other is for q axis.

Space vector model versus *dq*-frame model

- These models are closely related to each other &
- are equally valid for analysis of transient & steady state performance of induction generator.

3.3.2 Space Vector Model

Some Assumptions:

1. Induction generator is symmetrical in structure and 3-phase balanced.
2. Magnetic core of stator & rotor is linear with negligible core losses.

IG space vector model is composed of 3 sets of equations:

1. Voltage equations

2. Flux linkage equations

3. Motion equation

1.Voltage equations

Write voltage equations for stator of generator in arbitrary reference frame?

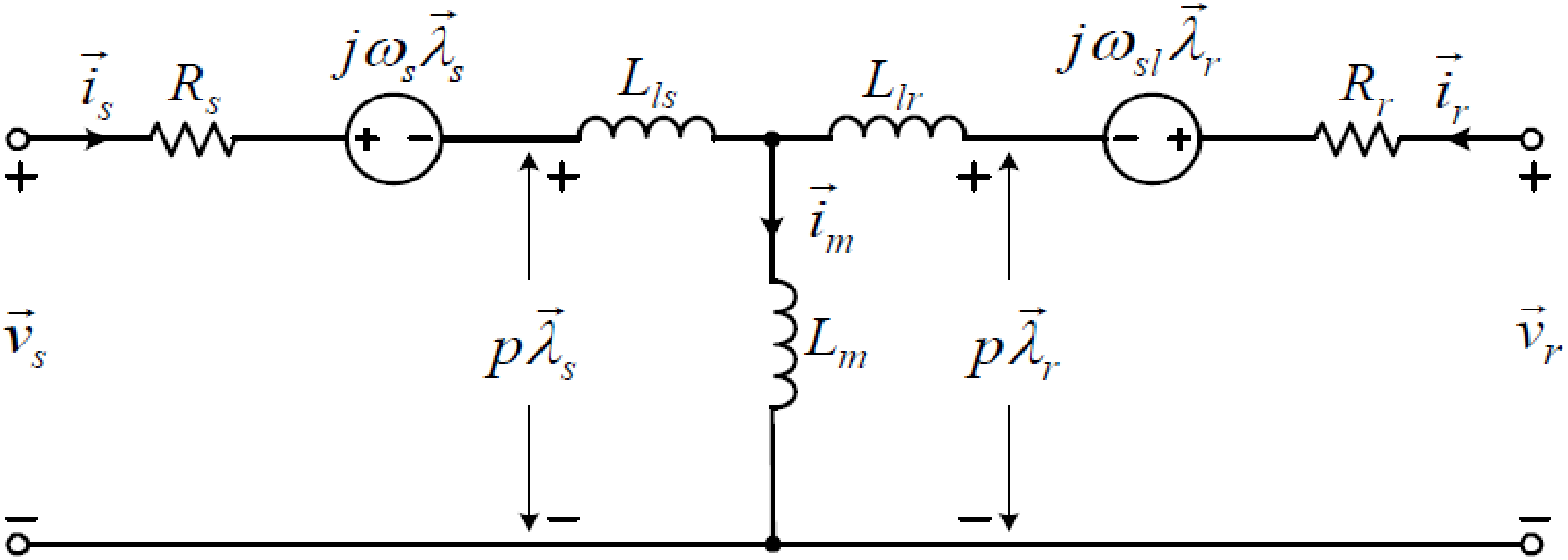

Write Voltage equations for stator of generator in arbitrary reference frame?

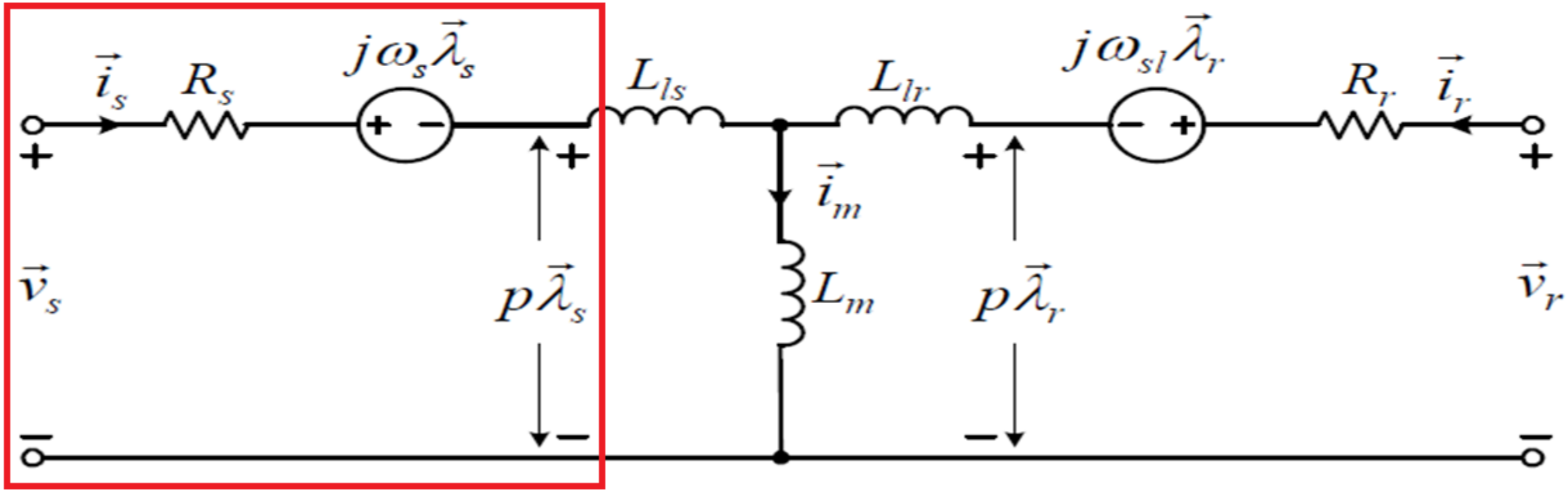

Voltage equations for stator of generator in arbitrary reference frame

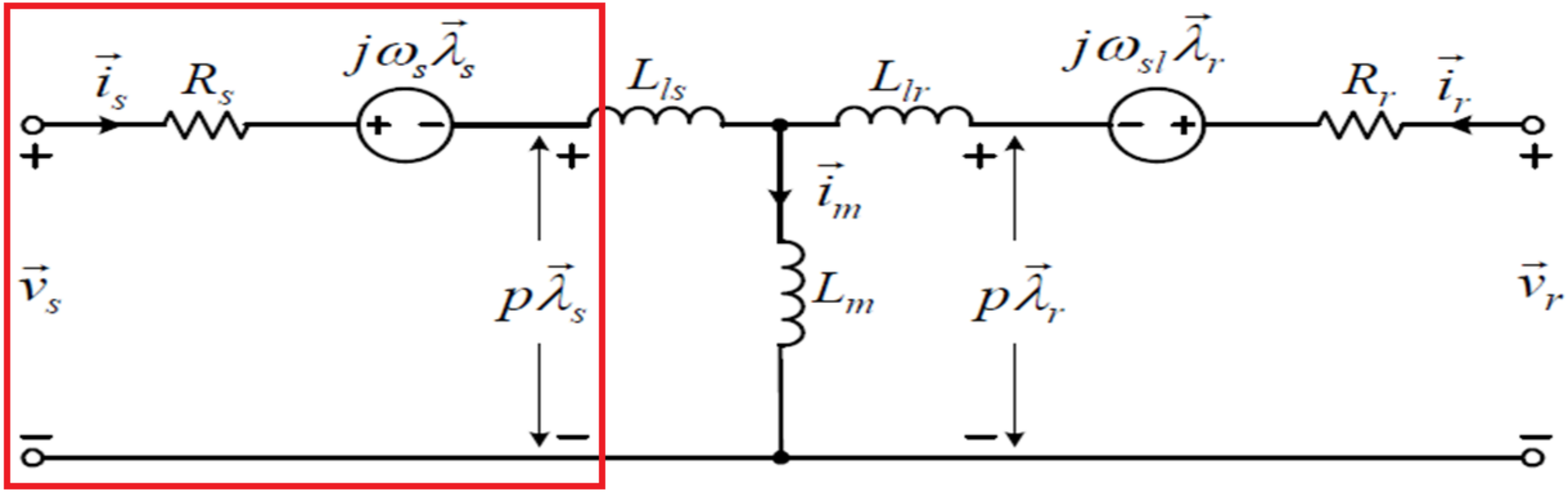

$$\vec{v}_s = R_s\vec{i}_s + p\vec{\lambda}_s + j\omega\vec{\lambda}_s$$

Write Voltage equations for rotor of generator in arbitrary reference frame?

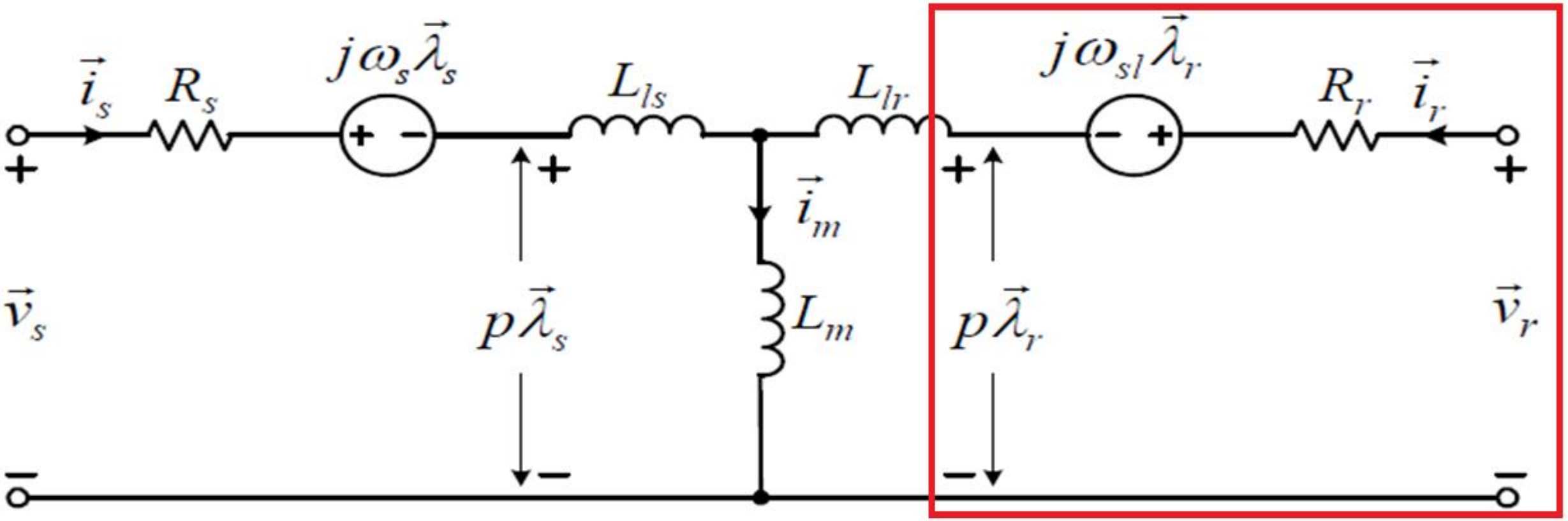

Voltage equations for rotor of generator in arbitrary reference frame?

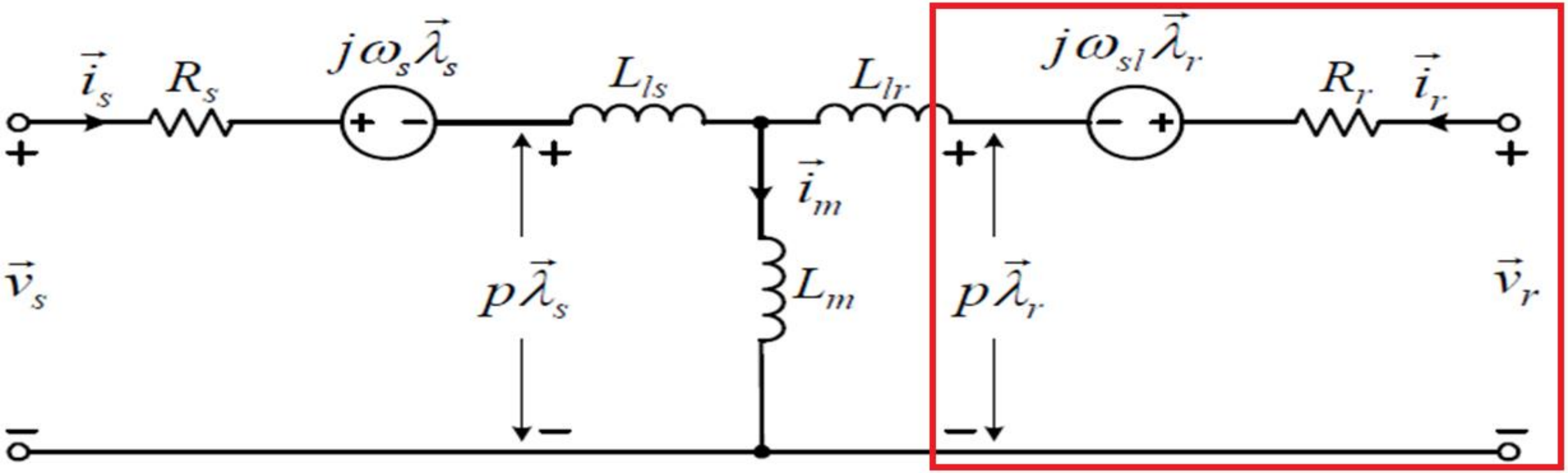

$$\vec{v}_r = R_r\vec{i}_r + p\vec{\lambda}_r + j(\omega - \omega_r)\vec{\lambda}_r$$

$$\begin{cases} \vec{v}_s = R_s \vec{i}_s + p\vec{\lambda}_s + j\omega\vec{\lambda}_s \\ \vec{v}_r = R_r \vec{i}_r + p\vec{\lambda}_r + j(\omega - \omega_r)\vec{\lambda}_r \end{cases}$$

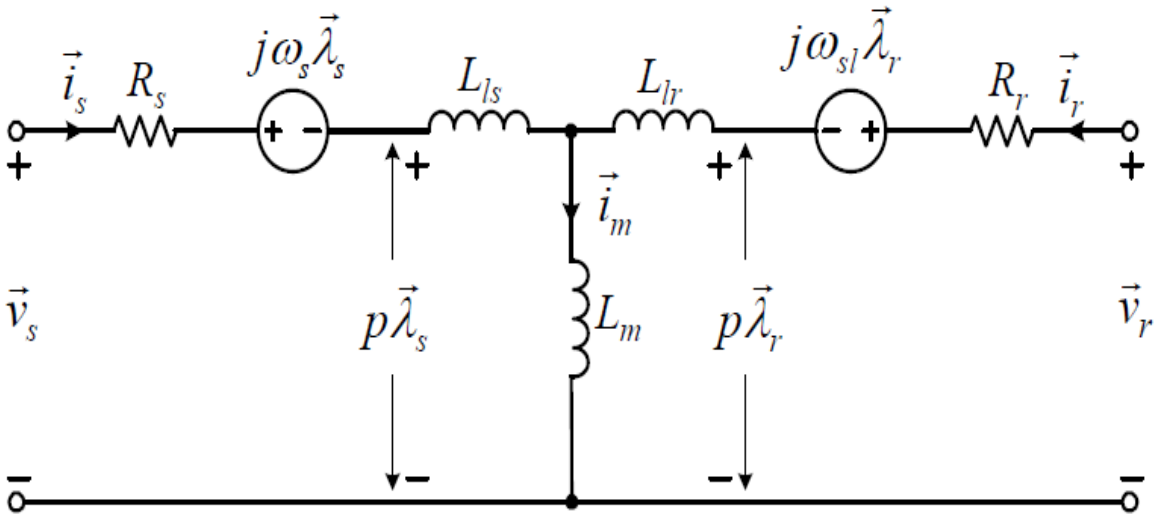

where

$\vec{v}_s, \vec{v}_r$ – stator and rotor voltage vectors [V];

$\vec{i}_s, \vec{i}_r$ – stator and rotor current vectors [A];

$\vec{\lambda}_s, \vec{\lambda}_r$ – stator and rotor flux-linkage vectors [Wb];

R_s, R_r – stator and rotor winding resistances [Ω];

ω – rotating speed of the arbitrary reference frame [rad/s];

ω_r – rotor electrical angular speed [rad/s]; and

p – derivative operator ($p = d / dt$).

"speed voltages"

$$\begin{cases} \vec{v}_s = R_s \vec{i}_s + p\vec{\lambda}_s + \boxed{j\omega\vec{\lambda}_s} \\ \vec{v}_r = R_r \vec{i}_r + p\vec{\lambda}_r + \boxed{j(\omega - \omega_r)\vec{\lambda}_r} \end{cases}$$

- Terms $j\omega\vec{\lambda}_s$ & $j(\omega - \omega_r)\vec{\lambda}_r$

on right-hand side of above equation are referred to as "speed voltages",

- which are induced by rotation of reference frame at arbitrary speed of ω.

2.Flux linkage equations

Write Stator & rotor flux linkages equations?

$\vec{\lambda}_s$ and $\vec{\lambda}_r$

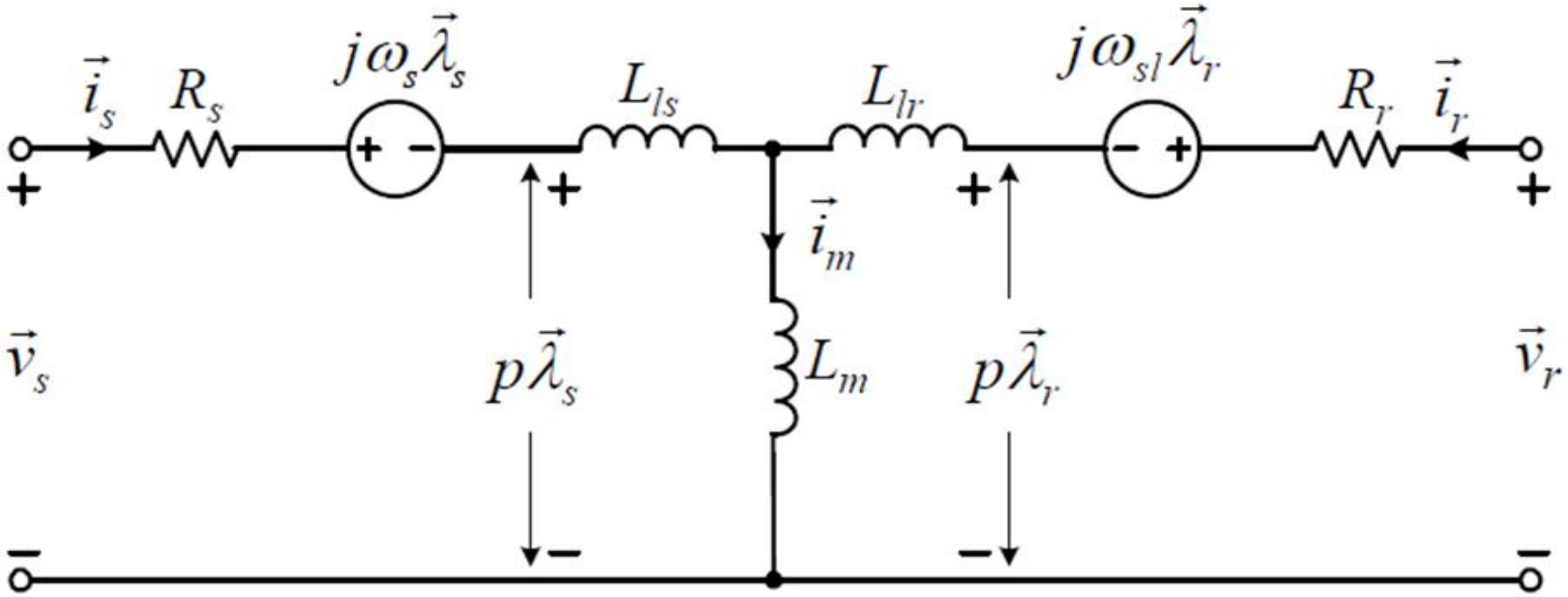

Stator flux linkage $\vec{\lambda}_s$

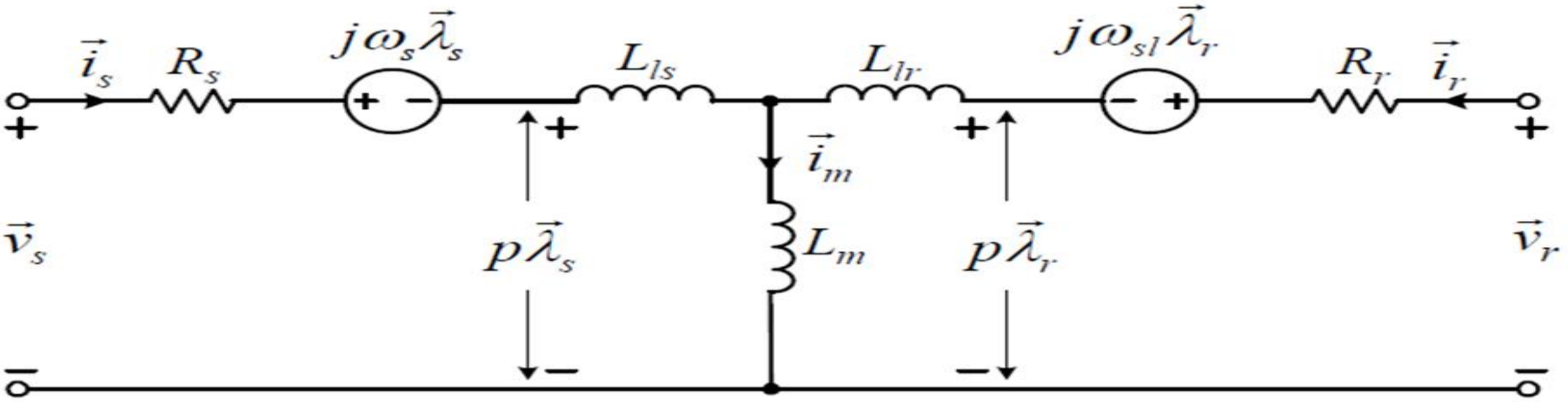

$$\vec{\lambda}_s = (L_{ls} + L_m)\vec{i}_s + L_m\vec{i}_r = L_s\vec{i}_s + L_m\vec{i}_r$$

Rotor flux linkage $\vec{\lambda}_r$

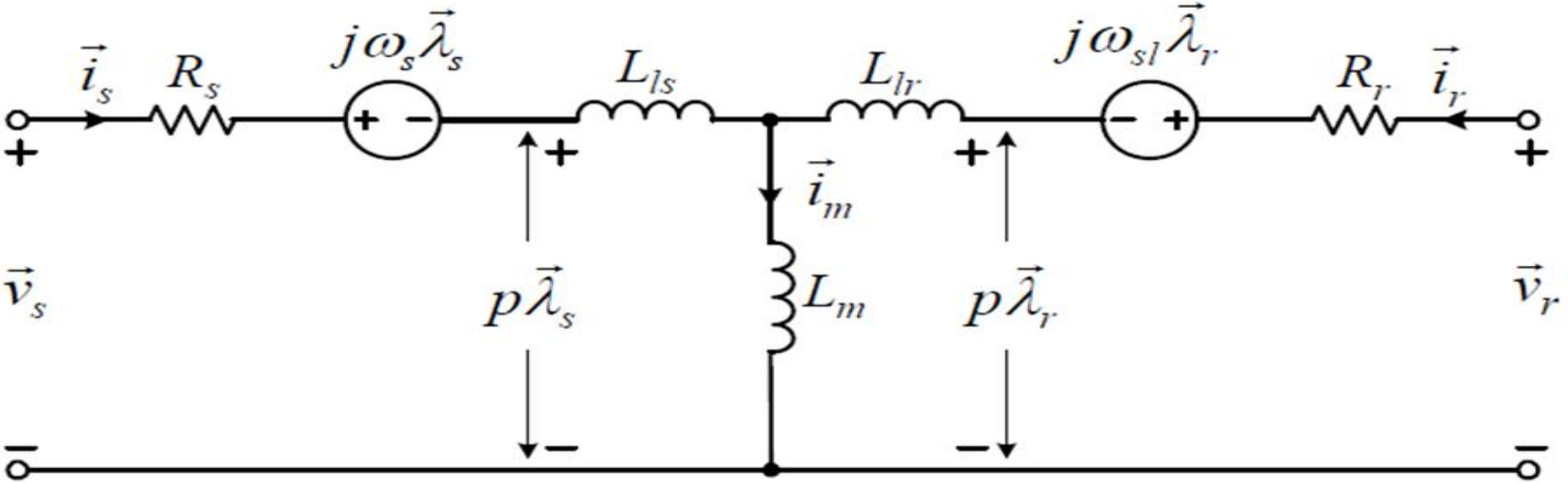

$$\vec{\lambda}_r = \left(L_{lr} + L_m\right)\vec{i}_r + L_m\vec{i}_s = L_r\vec{i}_r + L_m\vec{i}_s$$

Stator & rotor flux linkages $\vec{\lambda}_s$ and $\vec{\lambda}_r$

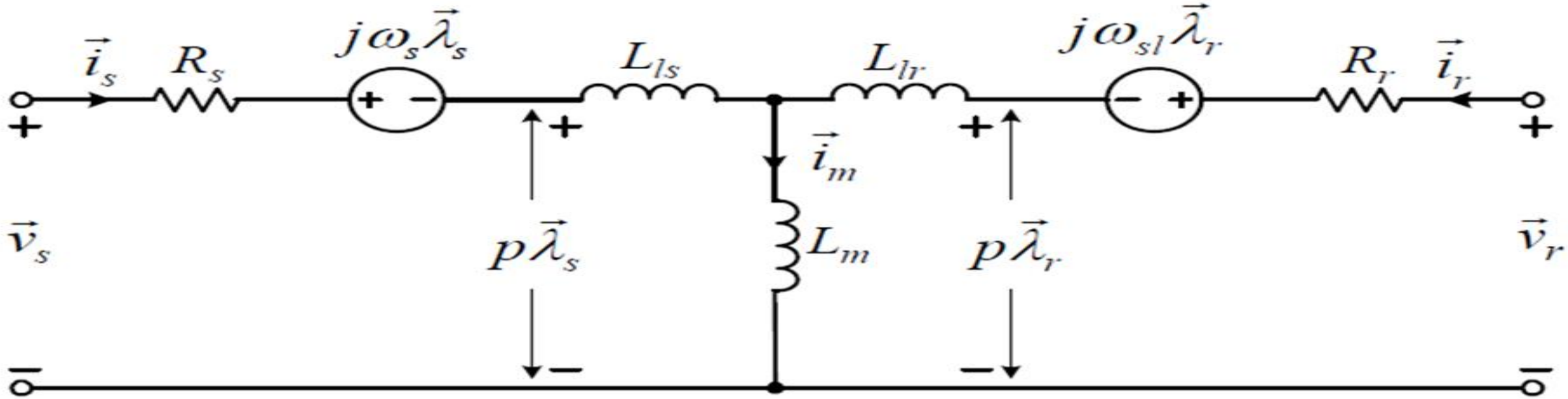

$$\begin{cases} \vec{\lambda}_s = (L_{ls} + L_m)\vec{i}_s + L_m\vec{i}_r = L_s\vec{i}_s + L_m\vec{i}_r \\ \vec{\lambda}_r = (L_{lr} + L_m)\vec{i}_r + L_m\vec{i}_s = L_r\vec{i}_r + L_m\vec{i}_s \end{cases}$$

$$\begin{cases} \vec{\lambda}_s = \left(L_{ls} + L_m\right)\vec{i}_s + L_m \vec{i}_r = L_s \vec{i}_s + L_m \vec{i}_r \\ \vec{\lambda}_r = \left(L_{lr} + L_m\right)\vec{i}_r + L_m \vec{i}_s = L_r \vec{i}_r + L_m \vec{i}_s \end{cases}$$

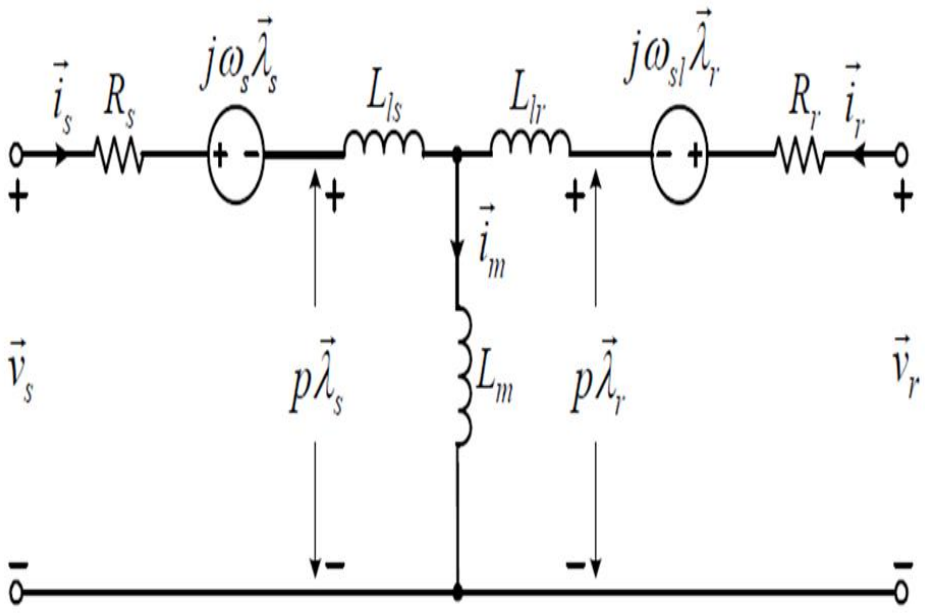

where

$L_s = L_{ls} + L_m$ – stator self-inductance [H];

$L_r = L_{lr} + L_m$ – rotor self-inductance [H];

L_{ls}, L_{lr} – stator and rotor leakage inductances [H]; and

L_m – magnetizing inductance [H].

All rotor-side parameters & variables in equations are referred to stator side

R_r, L_{lr}, $\vec{i}_r$ and $\vec{\lambda}_r$

$$\begin{cases} \vec{v}_s = R_s \vec{i}_s + p\vec{\lambda}_s + j\omega\vec{\lambda}_s \\ \vec{v}_r = R_r \vec{i}_r + p\vec{\lambda}_r + j(\omega - \omega_r)\vec{\lambda}_r \end{cases}$$

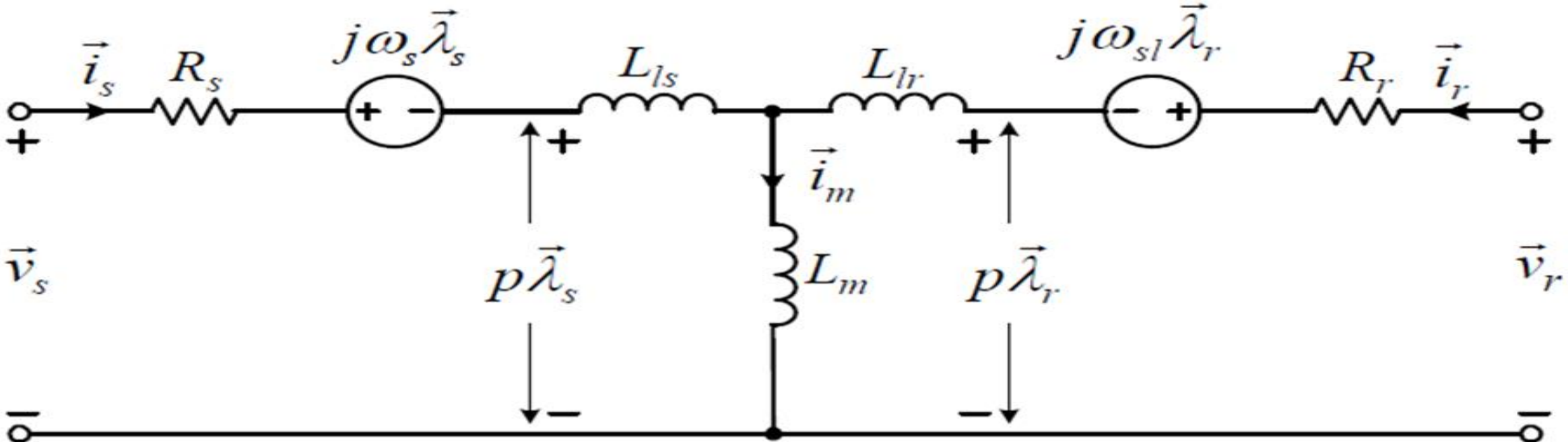

3.Motion equation

3.Motion equation describes dynamic behaviour of rotor mechanical speed in terms of mechanical & electromagnetic torque:

$$\begin{cases} J\dfrac{d\omega_m}{dt} = T_e - T_m \\ T_e = \dfrac{3P}{2}\mathrm{Re}\left(j\,\vec{\lambda}_s\,\vec{i}_s^{\,*}\right) = -\dfrac{3P}{2}\mathrm{Re}\left(j\,\vec{\lambda}_r\,\vec{i}_r^{\,*}\right) \end{cases}$$

where

J – moment of inertia of the rotor [kgm^2];

P – number of pole pairs;

T_m – mechanical torque from the generator shaft [N.m];

T_e – electromagnetic torque [N.m]; and

ω_m – rotor mechanical speed ($\omega_m = \omega_r / P$) [rad/sec].

These equations constitute space vector model of induction generator, whose equivalent circuit representation is shownin Fig.

$$\begin{cases} \vec{v}_s = R_s \vec{i}_s + p\vec{\lambda}_s + j\omega\vec{\lambda}_s \\ \vec{v}_r = R_r \vec{i}_r + p\vec{\lambda}_r + j(\omega - \omega_r)\vec{\lambda}_r \end{cases} \qquad \begin{aligned} \vec{\lambda}_s &= L_s \vec{i}_s + L_m \vec{i}_r \\ \vec{\lambda}_r &= L_r \vec{i}_r + L_m \vec{i}_s \end{aligned} \qquad \begin{cases} J\dfrac{d\omega_m}{dt} = T_e - T_m \\ T_e = \dfrac{3P}{2}\mathrm{Re}\left(j\vec{\lambda}_s \vec{i}_s^*\right) = -\dfrac{3P}{2}\mathrm{Re}\left(j\vec{\lambda}_r \vec{i}_r^*\right) \end{cases}$$

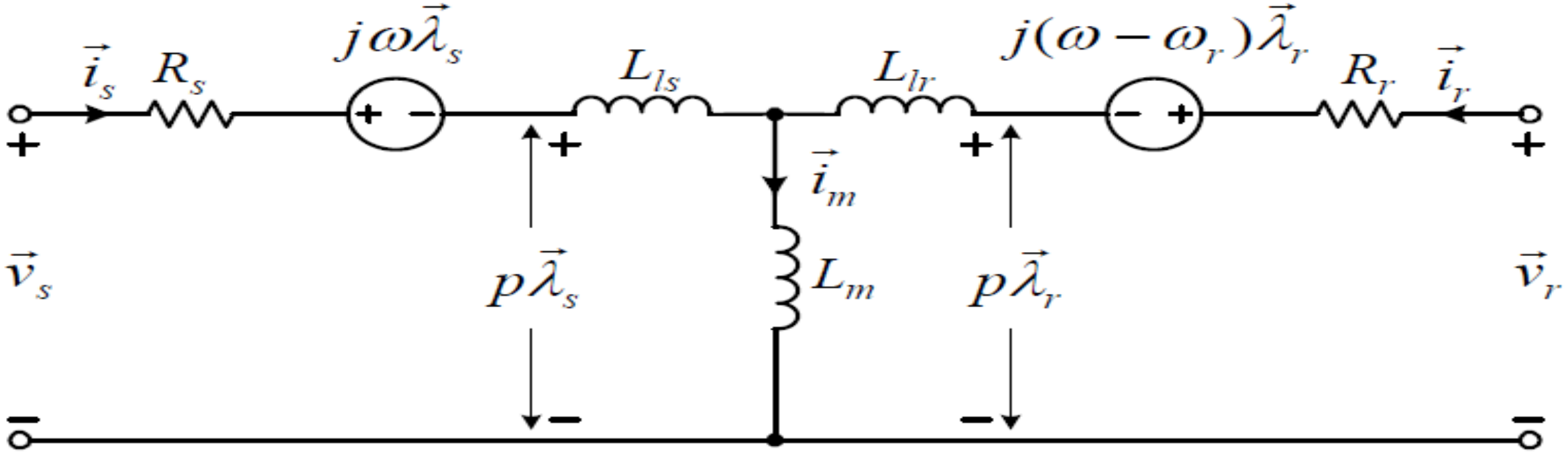

Generator model is in arbitrary reference frame, rotating in space at arbitrary speed ω.

$$\begin{cases} \vec{v}_s = R_s \vec{i}_s + p\vec{\lambda}_s + j\omega\vec{\lambda}_s \\ \vec{v}_r = R_r \vec{i}_r + p\vec{\lambda}_r + j(\omega - \omega_r)\vec{\lambda}_r \end{cases} \qquad \begin{aligned} \vec{\lambda}_s &= L_s \vec{i}_s + L_m \vec{i}_r \\ \vec{\lambda}_r &= L_r \vec{i}_r + L_m \vec{i}_s \end{aligned} \qquad \begin{cases} J\dfrac{d\omega_m}{dt} = T_e - T_m \\ T_e = \dfrac{3P}{2}\mathrm{Re}\left(j\vec{\lambda}_s \vec{i}_s^*\right) = -\dfrac{3P}{2}\mathrm{Re}\left(j\vec{\lambda}_r \vec{i}_r^*\right) \end{cases}$$

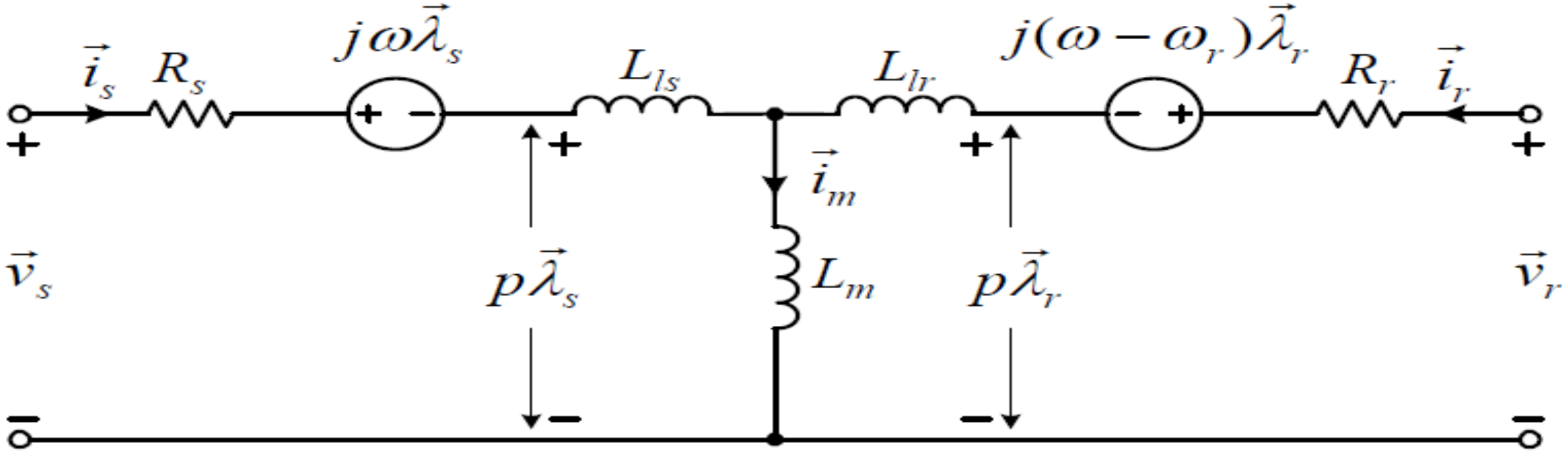

Induction generator model of Fig. in arbitrary reference frame can be easily transformed into other reference frames e.g

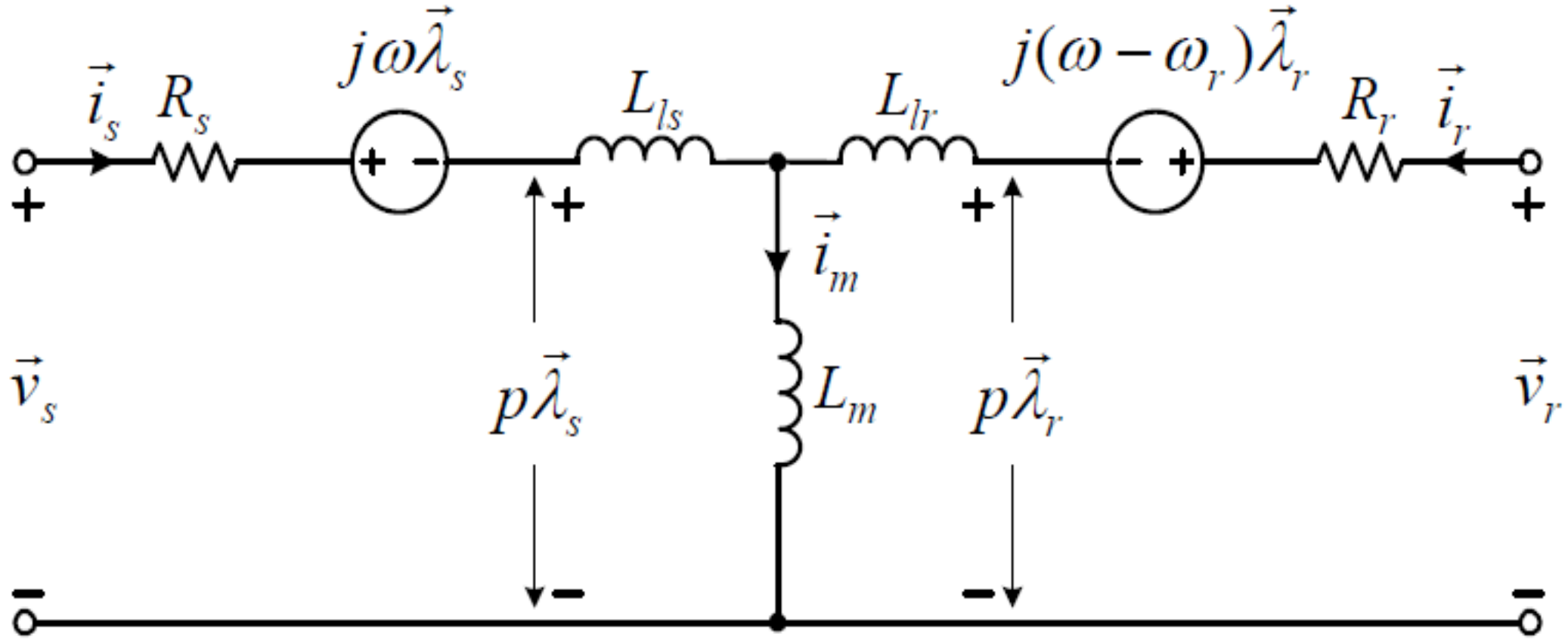

Such a model can be obtained by setting arbitrary speed ω in equation & in Fig. to synchronous speed ω_s.

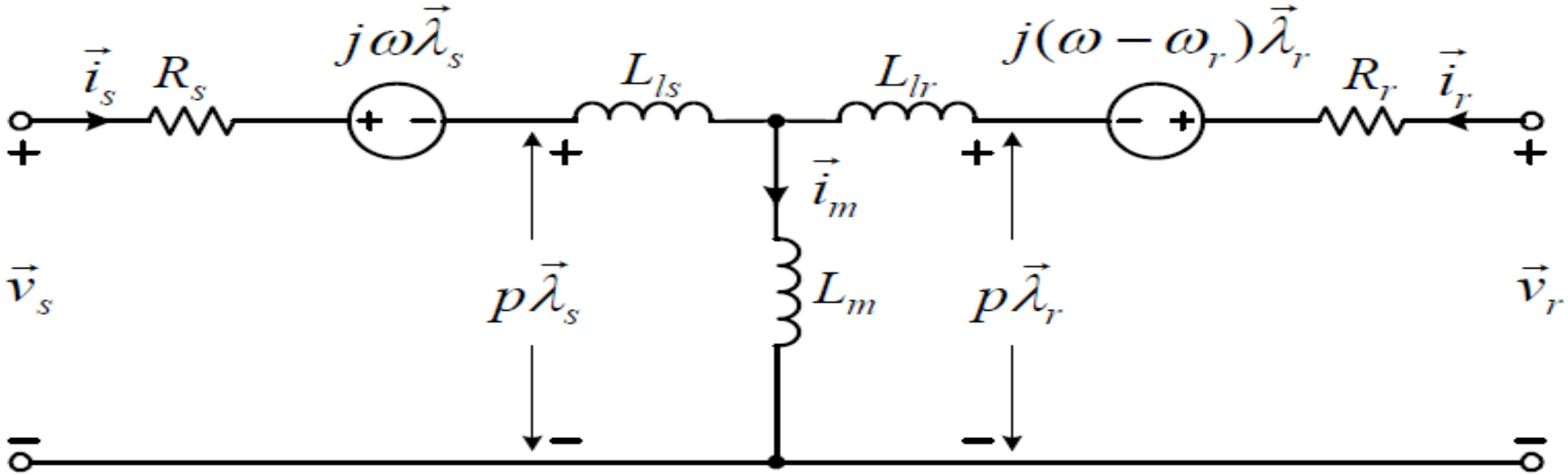

$$\begin{cases} \vec{v}_s = R_s\,\vec{i}_s + p\vec{\lambda}_s + j\omega\vec{\lambda}_s \\ \vec{v}_r = R_r\,\vec{i}_r + p\vec{\lambda}_r + j(\omega-\omega_r)\vec{\lambda}_r \end{cases}$$

Derived model in synchronous frame where ω_s is synchronous speed & ω_{sl} is angular slip frequency of generator:

$$\begin{cases} \omega_s = 2\pi f_s \\ \omega_{sl} = \omega_s - \omega_r \end{cases}$$

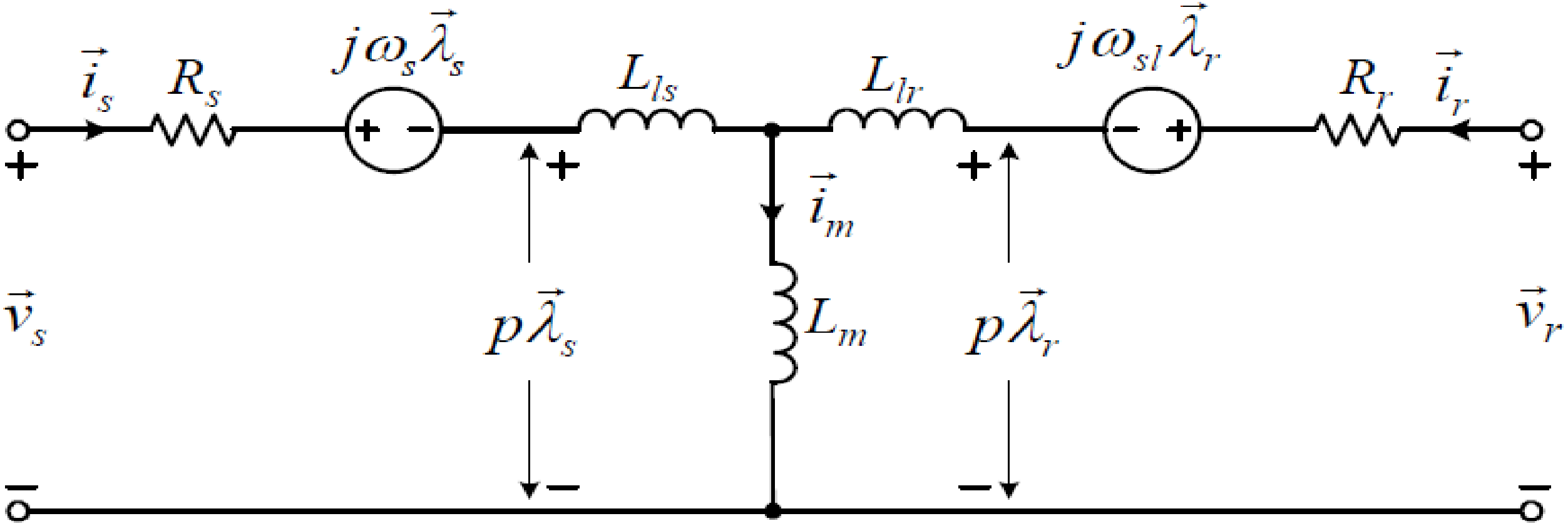

To obtain IG model in stationary reference frame, we can set $\omega_s = 0$

$$\begin{cases} \omega_s = 2\pi f_s \\ \omega_{sl} = \omega_s - \omega_r \end{cases}$$

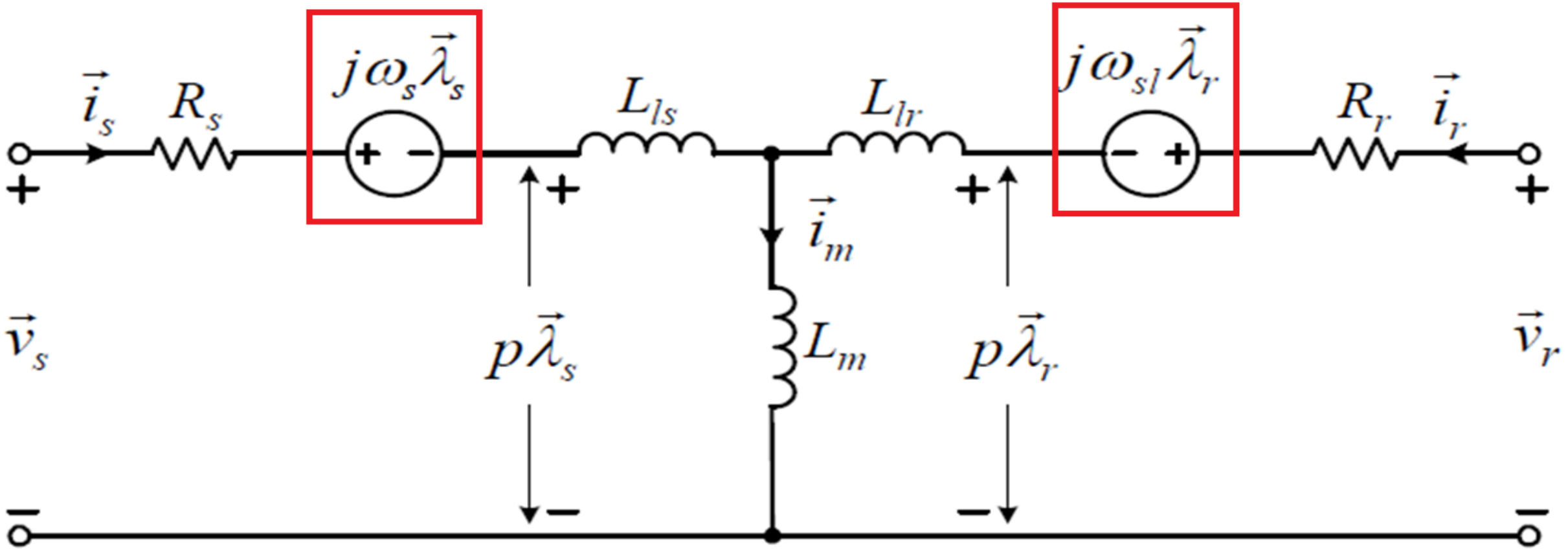

Resultant equivalent circuit of IG model in stationary frame

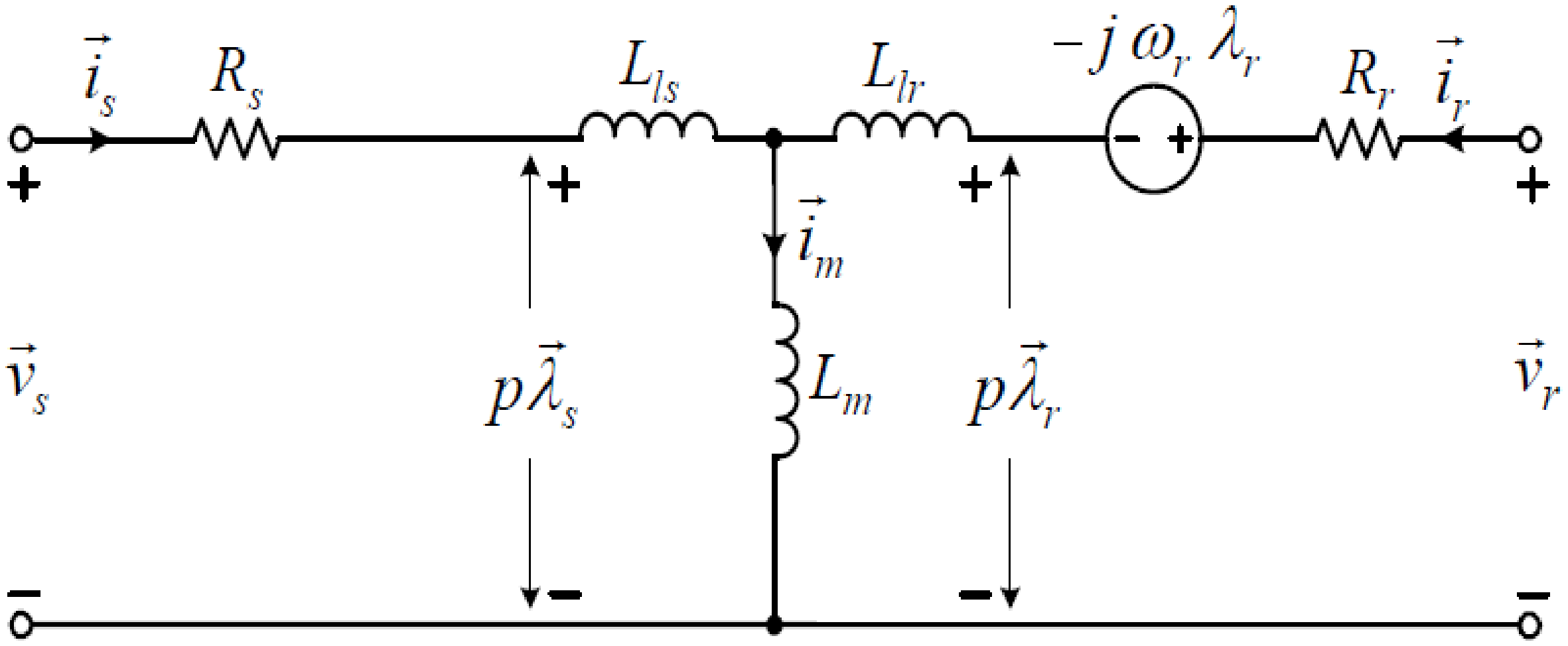

In SCIG rotor circuit is shorted so rotor voltage $\overrightarrow{v_r} = 0$

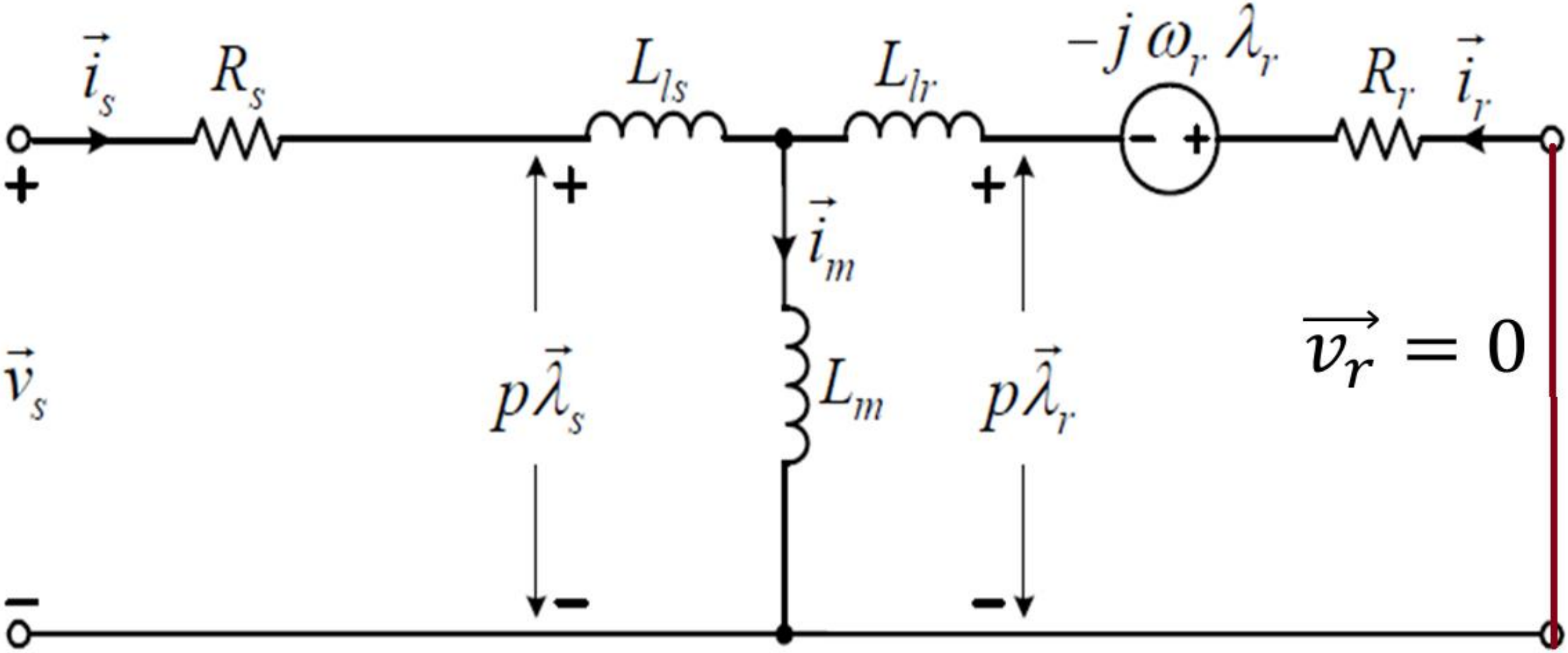

For DFIG rotor circuit is connected to a power converter system that controls speed & torque of generator.

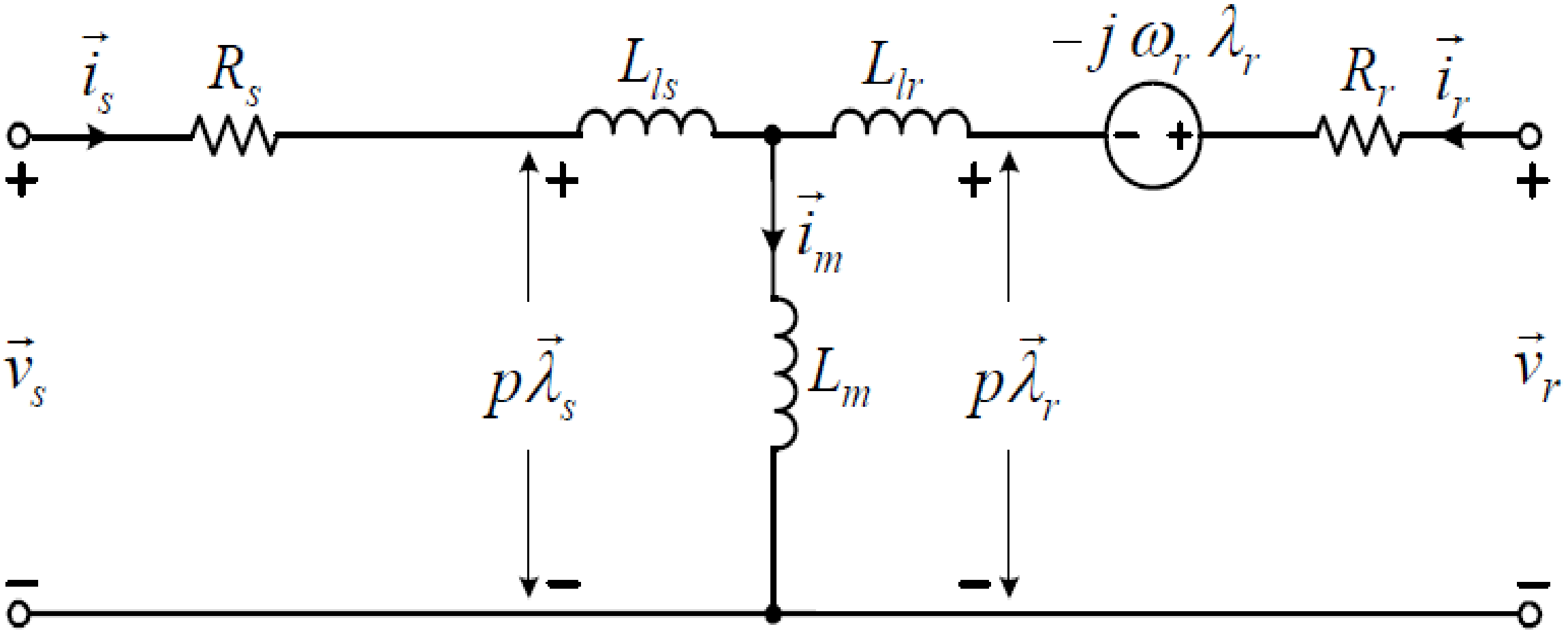

Lecture#07

3.3.3 *dq* Reference Frame Model

3.3.4 Simulation Model

3.3.5 Induction Generator Transient Characteristics

3.3.6 Steady-state Equivalent Circuit

3.3.3 *dq* Reference Frame Model

- *dq*-axis model of induction generator can be obtained by decomposing space vectors into their corresponding *d*- & *q*-axis components, i.e,

$$\begin{cases} \vec{v}_s = v_{ds} + j v_{qs}; \ \vec{i}_s = i_{ds} + j i_{qs}; \ \vec{\lambda}_s = \lambda_{ds} + j \lambda_{qs} \\ \vec{v}_r = v_{dr} + j v_{qr}; \ \vec{i}_r = i_{dr} + j i_{qr}; \ \vec{\lambda}_r = \lambda_{dr} + j \lambda_{qr} \end{cases}$$

Substituting

$$\begin{cases} \vec{v}_s = v_{ds} + j v_{qs}; \ \vec{i}_s = i_{ds} + j i_{qs}; \ \vec{\lambda}_s = \lambda_{ds} + j \lambda_{qs} \\ \vec{v}_r = v_{dr} + j v_{qr}; \ \vec{i}_r = i_{dr} + j i_{qr}; \ \vec{\lambda}_r = \lambda_{dr} + j \lambda_{qr} \end{cases}$$

into

$$\begin{cases} \vec{v}_s = R_s \vec{i}_s + p\vec{\lambda}_s + j\omega\vec{\lambda}_s \\ \vec{v}_r = R_r \vec{i}_r + p\vec{\lambda}_r + j(\omega - \omega_r)\vec{\lambda}_r \end{cases}$$

we obtained

$$v_{ds} + jv_{qs} = R_s(\mathrm{i}_{ds} + \mathrm{j}\mathrm{i}_{qs}) + \mathrm{p}(\lambda_{ds} + \mathrm{j}\lambda_{qs}) + \mathrm{j}\omega(\lambda_{ds} + \mathrm{j}\lambda_{qs})$$

$$v_{dr} + jv_{qr} = R_r(\mathrm{i}_{dr} + \mathrm{j}\mathrm{i}_{qr}) + \mathrm{p}(\lambda_{dr} + \mathrm{j}\lambda_{qr}) + \mathrm{j}(\omega - \omega_r)(\lambda_{dr} + \mathrm{j}\lambda_{qr})$$

Grouping real & imaginary components on both sides of equations,

$$v_{ds} + jv_{qs} = R_s(\mathrm{i}_{ds} + \mathrm{j}\mathrm{i}_{qs}) + \mathrm{p}(\lambda_{ds} + \mathrm{j}\lambda_{qs}) + \mathrm{j}\omega(\lambda_{ds} + \mathrm{j}\lambda_{qs})$$

$$v_{dr} + jv_{qr} = R_r(\mathrm{i}_{dr} + \mathrm{j}\mathrm{i}_{qr}) + \mathrm{p}(\lambda_{dr} + \mathrm{j}\lambda_{qr}) + \mathrm{j}(\omega - \omega_r)(\lambda_{dr} + \mathrm{j}\lambda_{qr})$$

Hence we obtained *dq*-axis voltage equations for induction generator

$$\begin{cases} v_{ds} = R_s i_{ds} + p\lambda_{ds} - \omega\lambda_{qs} \\ v_{qs} = R_s i_{qs} + p\lambda_{qs} + \omega\lambda_{ds} \\ v_{dr} = R_r i_{dr} + p\lambda_{dr} - (\omega - \omega_r)\lambda_{qr} \\ v_{qr} = R_r i_{qr} + p\lambda_{qr} + (\omega - \omega_r)\lambda_{dr} \end{cases}$$

Substituting

$$\begin{cases} \vec{v}_s = v_{ds} + j v_{qs}; \ \vec{i}_s = i_{ds} + j i_{qs}; \ \vec{\lambda}_s = \lambda_{ds} + j \lambda_{qs} \\ \vec{v}_r = v_{dr} + j v_{qr}; \ \vec{i}_r = i_{dr} + j i_{qr}; \ \vec{\lambda}_r = \lambda_{dr} + j \lambda_{qr} \end{cases}$$

into

$$\vec{\lambda}_s = L_s \vec{i}_s + L_m \vec{i}_r$$
$$\vec{\lambda}_r = L_r \vec{i}_r + L_m \vec{i}_s$$

We obtained

$$\begin{cases} \lambda_{ds} = (L_{ls} + L_m) i_{ds} + L_m i_{dr} = L_s i_{ds} + L_m i_{dr} \\ \lambda_{qs} = (L_{ls} + L_m) i_{qs} + L_m i_{qr} = L_s i_{qs} + L_m i_{qr} \\ \lambda_{dr} = (L_{lr} + L_m) i_{dr} + L_m i_{ds} = L_r i_{dr} + L_m i_{ds} \\ \lambda_{qr} = (L_{lr} + L_m) i_{qr} + L_m i_{qs} = L_r i_{qr} + L_m i_{qs} \end{cases}$$

Substituting

$$\begin{cases} \vec{v}_s = v_{ds} + j\,v_{qs}; \;\; \vec{i}_s = i_{ds} + j\,i_{qs}; \;\; \vec{\lambda}_s = \lambda_{ds} + j\,\lambda_{qs} \\ \vec{v}_r = v_{dr} + j\,v_{qr}; \;\; \vec{i}_r = i_{dr} + j\,i_{qr}; \;\; \vec{\lambda}_r = \lambda_{dr} + j\,\lambda_{qr} \end{cases}$$

into

$$\begin{cases} J\dfrac{d\omega_m}{dt} = T_e - T_m \\ T_e = \dfrac{3P}{2}\mathrm{Re}\left(j\,\vec{\lambda}_s\,\vec{i}_s^{\,*}\right) = -\dfrac{3P}{2}\mathrm{Re}\left(j\,\vec{\lambda}_r\,\vec{i}_r^{\,*}\right) \end{cases}$$

Electromagnetic torque in terms of *dq*-axis flux linkages & currents.

$$T_e = \begin{cases} \dfrac{3P}{2}(i_{qs}\lambda_{ds} - i_{ds}\lambda_{qs}) & \text{(a)} \\ \dfrac{3PL_m}{2}(i_{qs}i_{dr} - i_{ds}i_{qr}) & \text{(b)} \\ \dfrac{3PL_m}{2L_r}(i_{qs}\lambda_{dr} - i_{ds}\lambda_{qr}) & \text{(c)} \end{cases}$$

These equations represent *dq*-axis model of induction generator in arbitrary reference frame

$$T_e = \begin{cases} \dfrac{3P}{2}(i_{qs}\lambda_{ds} - i_{ds}\lambda_{qs}) & \text{(a)} \\ \dfrac{3PL_m}{2}(i_{qs}i_{dr} - i_{ds}i_{qr}) & \text{(b)} \\ \dfrac{3PL_m}{2L_r}(i_{qs}\lambda_{dr} - i_{ds}\lambda_{qr}) & \text{(c)} \end{cases}$$

$$\begin{cases} v_{ds} = R_s i_{ds} + p\lambda_{ds} - \omega\lambda_{qs} \\ v_{qs} = R_s i_{qs} + p\lambda_{qs} + \omega\lambda_{ds} \\ v_{dr} = R_r i_{dr} + p\lambda_{dr} - (\omega - \omega_r)\lambda_{qr} \\ v_{qr} = R_r i_{qr} + p\lambda_{qr} + (\omega - \omega_r)\lambda_{dr} \end{cases}$$

$$\begin{cases} \lambda_{ds} = (L_{ls} + L_m)i_{ds} + L_m i_{dr} = L_s i_{ds} + L_m i_{dr} \\ \lambda_{qs} = (L_{ls} + L_m)i_{qs} + L_m i_{qr} = L_s i_{qs} + L_m i_{qr} \\ \lambda_{dr} = (L_{lr} + L_m)i_{dr} + L_m i_{ds} = L_r i_{dr} + L_m i_{ds} \\ \lambda_{qr} = (L_{lr} + L_m)i_{qr} + L_m i_{qs} = L_r i_{qr} + L_m i_{qs} \end{cases}$$

$$J\frac{d\omega_m}{dt} = T_e - T_m$$

d-axis equivalent circuits

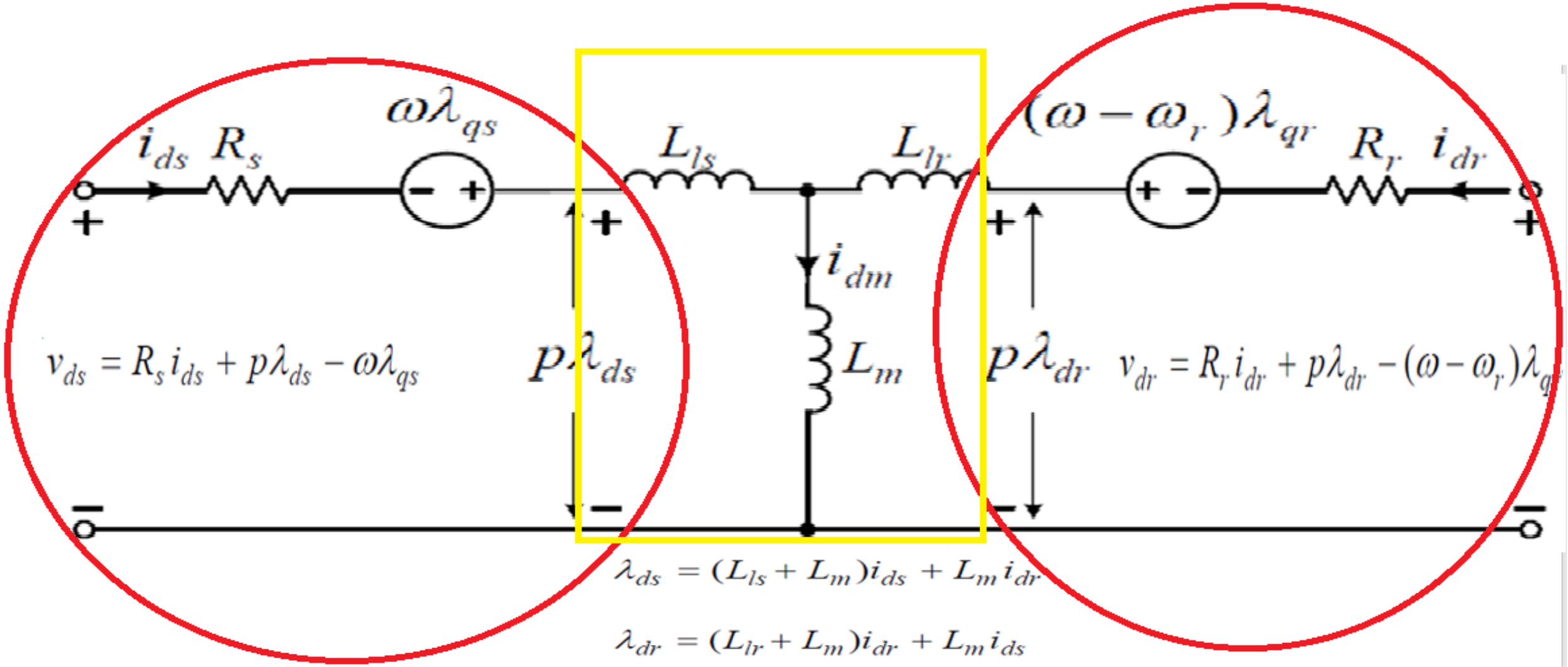

$$\lambda_{ds} = (L_{ls} + L_m)i_{ds} + L_m i_{dr}$$

$$\lambda_{dr} = (L_{lr} + L_m)i_{dr} + L_m i_{ds}$$

q-axis equivalent circuits

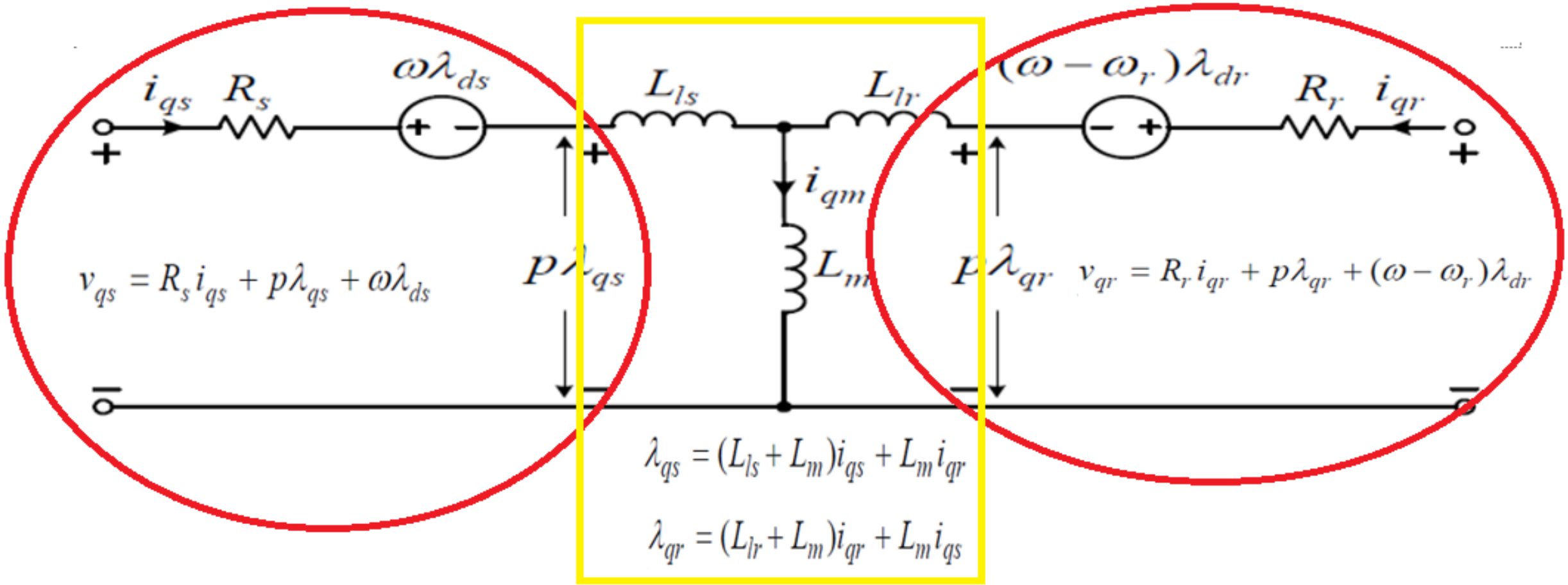

Corresponding *dq*-axis equivalent circuits are shown in Fig.

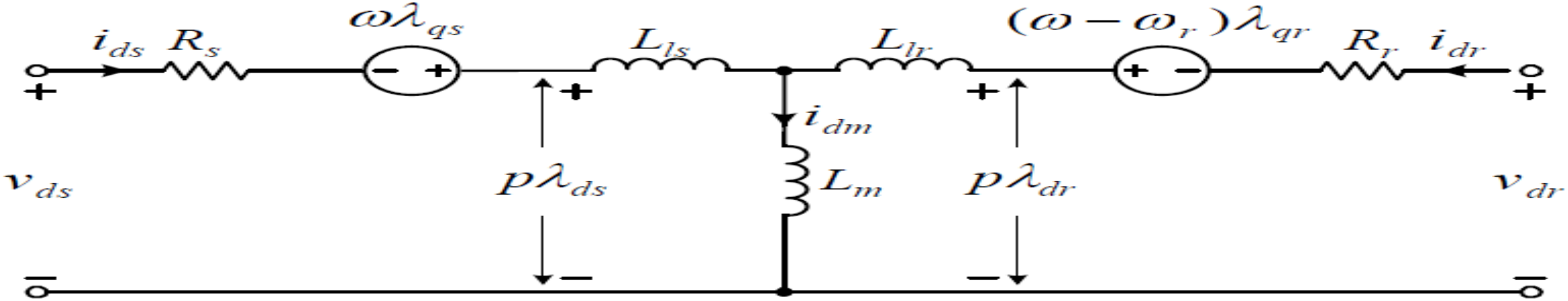

(a) *d*-axis circuit

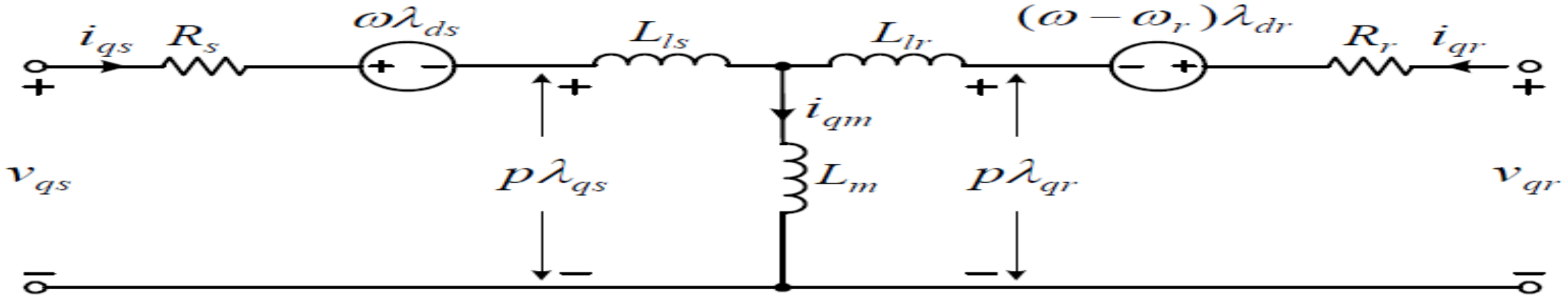

(b) *q*-axis circuit

To obtain *dq*-axis model in synchronous reference frames, speed of arbitrary reference frame ω can be set to synchronous (stator) frequency ω_s of generator.

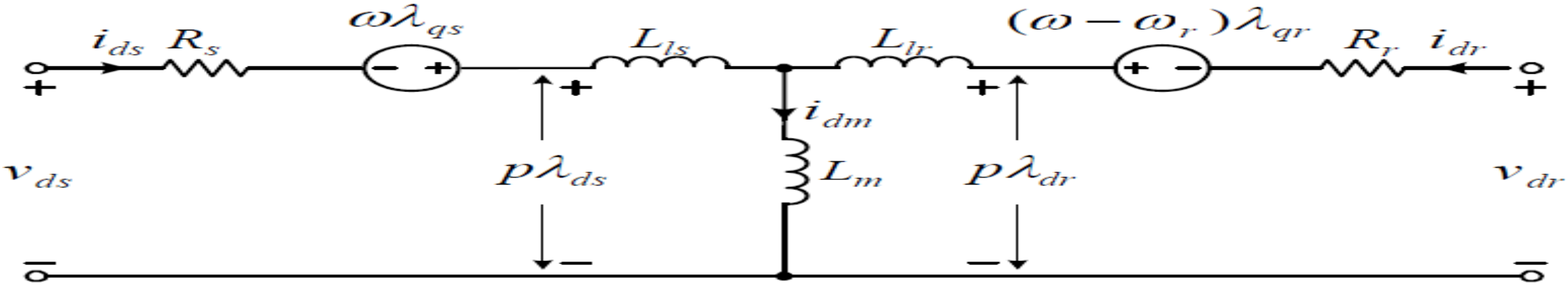

(a) *d*-axis circuit

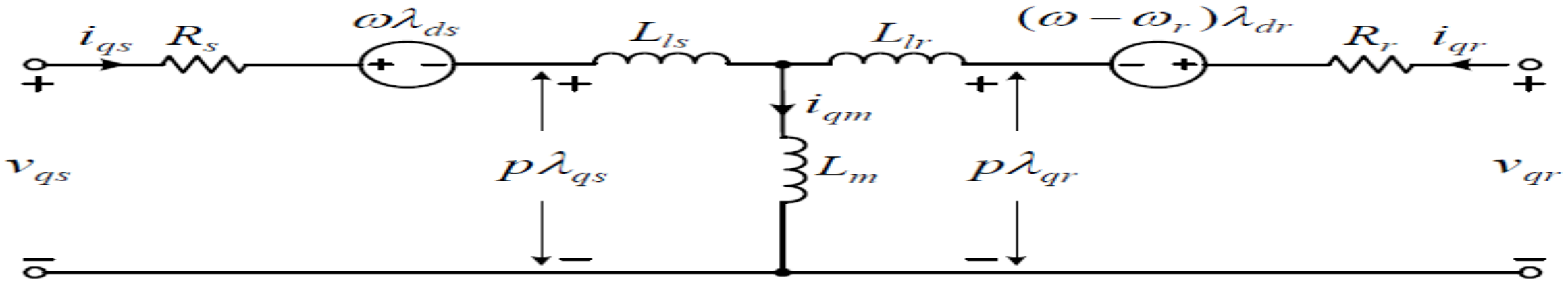

(b) *q*-axis circuit

To obtain *dq*-axis model in stationary reference frames, speed of arbitrary reference frame ω can be set to 0.

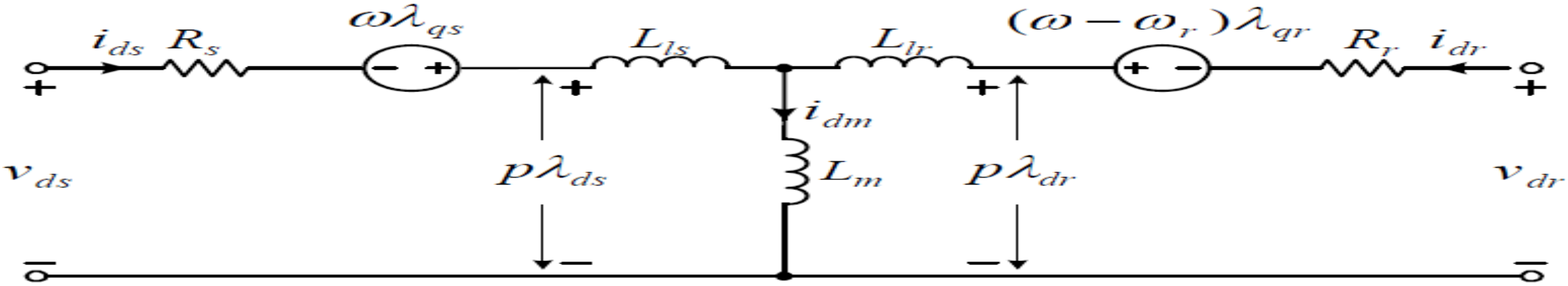

(a) *d*-axis circuit

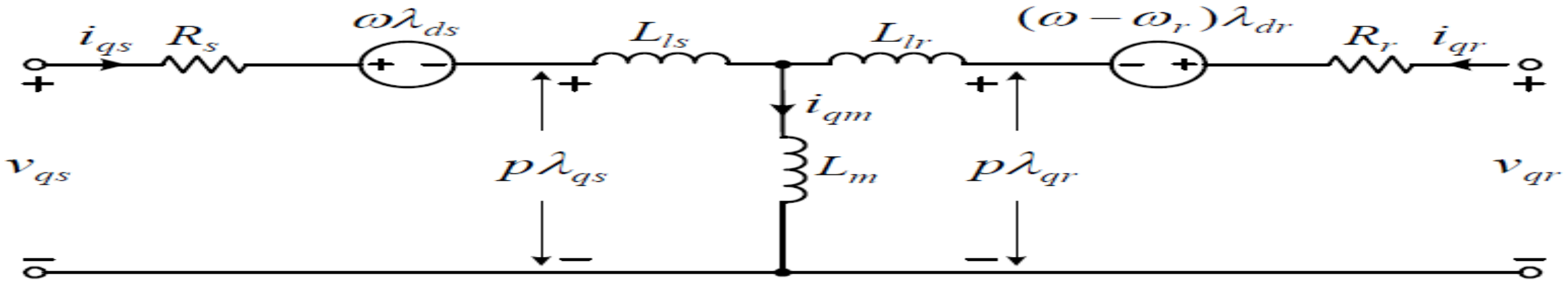

(b) *q*-axis circuit

Case Study 3-1

Direct Grid Connection of SCIG during System Start-up

1. Investigate dynamic performance of SCIG wind energy system during system start-up &
2. Verify that large SCIG cannot be directly connected to grid due to excessive inrush current & torque oscillations.

2.3MW/690V/50Hz/1512rpm squirrel cage induction generator.

Its nameplate & parameters are listed in Table B-1 of Appendix B.

Generator Type	**SCIG, 2.3MW/690V/50Hz**	
Rated Output Power	2.30 MW	
Rated Mechanical Power	2.3339 MW	1.0 pu
Rated Apparent Power	2.59 MVA	1.0 pu
Rated Line-to-line Voltage	690 V (rms)	
Rated Phase Voltage	398.4 V (rms)	1.0 pu
Rated Stator Current	2168 A (rms)	1.0 pu
Rated Stator Frequency	50 Hz	1.0 pu
Rated Power Factor	0.888	
Rated Rotor Speed	1512 rpm	1.0pu
Rated Slip	-0.008	
Number of Pole Pairs	2	
Rated Mechanical Torque	14.74 kN.m	1.0 pu
Rated Stator Flux Linkage	1.2748 Wb (rms)	1.0053 pu
Rated Rotor Flux Linkage	1.2096 Wb (rms)	0.9539 pu
Stator Winding Resistance R_s	1.102 mΩ	0.006 pu
Rotor Winding Resistance R_r	1.497 mΩ	0.008 pu
Stator Leakage Inductance L_{ls}	0.06492 mH	0.111 pu
Rotor Leakage Inductance L_{lr}	0.06492 mH	0.111 pu
Magnetizing Inductance L_m	2.13461 mH	3.6481 pu
Moment of Inertia J	1200 kg.m^2	
Inertia Time Constant H	5.8078 sec	
Base Flux Linkage Λ_B	1.2681 Wb (rms)	1.0 pu
Base Impedance Z_B	0.1838 Ω	1.0 pu
Base Inductance L_B	0.58513 mH	1.0 pu
Base Capacitance C_B	17316.17 μF	1.0 pu
Note: $H = J(\omega_m)^2/(2S_B)$		

3.3.4 Simulation Model

- Equation

$$\begin{cases} v_{ds} = R_s i_{ds} + p\boxed{\lambda_{ds}} - \omega\lambda_{qs} \\ v_{qs} = R_s i_{qs} + p\boxed{\lambda_{qs}} + \omega\lambda_{ds} \\ v_{dr} = R_r i_{dr} + p\boxed{\lambda_{dr}} - (\omega - \omega_r)\lambda_{qr} \\ v_{qr} = R_r i_{qr} + p\boxed{\lambda_{qr}} + (\omega - \omega_r)\lambda_{dr} \end{cases}$$

can be rewritten as

$$\begin{cases} \lambda_{ds} = \left(v_{ds} - R_s i_{ds} + \omega\lambda_{qs}\right)/S \\ \lambda_{qs} = \left(v_{qs} - R_s i_{qs} - \omega\lambda_{ds}\right)/S \\ \lambda_{dr} = \left(v_{dr} - R_r i_{dr} + (\omega - \omega_r)\lambda_{qr}\right)/S \\ \lambda_{qr} = \left(v_{qr} - R_r i_{qr} - (\omega - \omega_r)\lambda_{dr}\right)/S \end{cases}$$

Represent Flux linkage in a matrix (4×4) form?

$$\begin{cases} \lambda_{ds} = L_s i_{ds} + L_m i_{dr} \\ \lambda_{qs} = L_s i_{qs} + L_m i_{qr} \\ \lambda_{dr} = L_r i_{dr} + L_m i_{ds} \\ \lambda_{qr} = L_r i_{qr} + L_m i_{qs} \end{cases}$$

Flux linkage in a matrix(4×4) form

$$\begin{cases} \lambda_{ds} = L_s i_{ds} + L_m i_{dr} \\ \lambda_{qs} = L_s i_{qs} + L_m i_{qr} \\ \lambda_{dr} = L_r i_{dr} + L_m i_{ds} \\ \lambda_{qr} = L_r i_{qr} + L_m i_{qs} \end{cases}$$

$$\begin{bmatrix} \lambda_{ds} \\ \lambda_{qs} \\ \lambda_{dr} \\ \lambda_{qr} \end{bmatrix} = \begin{bmatrix} L_s & 0 & L_m & 0 \\ 0 & L_s & 0 & L_m \\ L_m & 0 & L_r & 0 \\ 0 & L_m & 0 & L_r \end{bmatrix} \cdot \begin{bmatrix} i_{ds} \\ i_{qs} \\ i_{dr} \\ i_{qr} \end{bmatrix}$$

Stator & rotor currents in equation can be expressed in terms of stator & rotor flux linkages. $[\lambda]=[L][i]$

$$\begin{bmatrix} \lambda_{ds} \\ \lambda_{qs} \\ \lambda_{dr} \\ \lambda_{qr} \end{bmatrix} = \begin{bmatrix} L_s & 0 & L_m & 0 \\ 0 & L_s & 0 & L_m \\ L_m & 0 & L_r & 0 \\ 0 & L_m & 0 & L_r \end{bmatrix} \cdot \begin{bmatrix} i_{ds} \\ i_{qs} \\ i_{dr} \\ i_{qr} \end{bmatrix}$$

By applying inverse inductance matrix on both sides of, using following matrix manipulation

$$[\lambda]=[L][i] \quad \rightarrow \quad [L]^{-1}[\lambda]=[L]^{-1}[L][i] \quad \rightarrow \quad [i]=[L]^{-1}[\lambda]$$

$$\begin{bmatrix} \lambda_{ds} \\ \lambda_{qs} \\ \lambda_{dr} \\ \lambda_{qr} \end{bmatrix} = \begin{bmatrix} L_s & 0 & L_m & 0 \\ 0 & L_s & 0 & L_m \\ L_m & 0 & L_r & 0 \\ 0 & L_m & 0 & L_r \end{bmatrix} \cdot \begin{bmatrix} i_{ds} \\ i_{qs} \\ i_{dr} \\ i_{qr} \end{bmatrix} \qquad \begin{bmatrix} i_{ds} \\ i_{qs} \\ i_{dr} \\ i_{qr} \end{bmatrix} = \frac{1}{D_1} \begin{bmatrix} L_r & 0 & -L_m & 0 \\ 0 & L_r & 0 & -L_m \\ -L_m & 0 & L_s & 0 \\ 0 & -L_m & 0 & L_s \end{bmatrix} \cdot \begin{bmatrix} \lambda_{ds} \\ \lambda_{qs} \\ \lambda_{dr} \\ \lambda_{qr} \end{bmatrix}$$

where $D_1 = L_s L_r - L_m^2$

Motion & torque equations for simulation model

$$T_e = \begin{cases} \frac{3P}{2}(i_{qs}\lambda_{ds} - i_{ds}\lambda_{qs}) & \text{(a)} \\ \cancel{\frac{3PL_m}{2}(i_{qs}i_{dr} - i_{ds}i_{qr})} & \cancel{\text{(b)}} \\ \cancel{\frac{3PL_m}{2L_r}(i_{qs}\lambda_{dr} - i_{ds}\lambda_{qr})} & \cancel{\text{(c)}} \end{cases}$$

$$J\frac{d\omega_m}{dt} = T_e - T_m$$

$$\begin{cases} \omega_r = \frac{P}{JS}(T_e - T_m) & \text{(a)} \\ T_e = \frac{3P}{2}(i_{qs}\lambda_{ds} - i_{ds}\lambda_{qs}) & \text{(b)} \end{cases}$$

$$JS(\frac{\omega_r}{P}) = T_e - T_m$$

$$\omega_m = (\frac{\omega_r}{P})$$

$$\frac{d}{dt} = S$$

- Based on (3.3-9), (3.3-12) & (3.3-13), block diagram for **simulation of induction generator in arbitrary reference frame can be developed**

$$\begin{cases} \lambda_{ds} = \left(v_{ds} - R_s i_{ds} + \omega\lambda_{qs}\right)/S \\ \lambda_{qs} = \left(v_{qs} - R_s i_{qs} - \omega\lambda_{ds}\right)/S \\ \lambda_{dr} = \left(v_{dr} - R_r i_{dr} + (\omega - \omega_r)\lambda_{qr}\right)/S \\ \lambda_{qr} = \left(v_{qr} - R_r i_{qr} - (\omega - \omega_r)\lambda_{dr}\right)/S \end{cases}$$

Eq. (3.3-9)

$$\begin{bmatrix} i_{ds} \\ i_{qs} \\ i_{dr} \\ i_{qr} \end{bmatrix} = \frac{1}{D_1} \begin{bmatrix} L_r & 0 & -L_m & 0 \\ 0 & L_r & 0 & -L_m \\ -L_m & 0 & L_s & 0 \\ 0 & -L_m & 0 & L_s \end{bmatrix} \cdot \begin{bmatrix} \lambda_{ds} \\ \lambda_{qs} \\ \lambda_{dr} \\ \lambda_{qr} \end{bmatrix}$$

Eq. (3.3-12)

$$\begin{cases} \omega_r = \dfrac{P}{JS}\left(T_e - T_m\right) \\ T_e = \dfrac{3P}{2}\left(i_{qs}\lambda_{ds} - i_{ds}\lambda_{qs}\right) \end{cases}$$

Eq. (3.3-13)

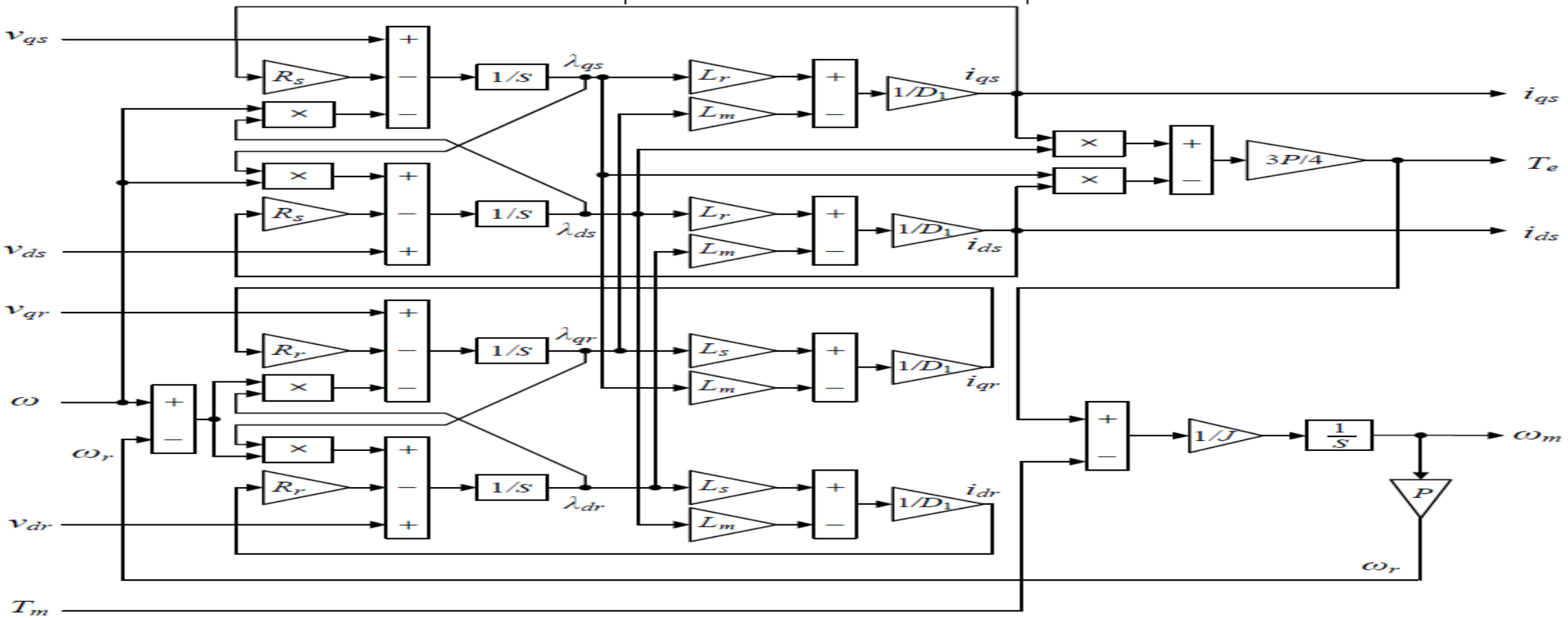

$$\begin{cases} \lambda_{ds} = \left(v_{ds} - R_s i_{ds} + \omega\lambda_{qs}\right)/S \\ \lambda_{qs} = \left(v_{qs} - R_s i_{qs} - \omega\lambda_{ds}\right)/S \\ \lambda_{dr} = \left(v_{dr} - R_r i_{dr} + (\omega - \omega_r)\lambda_{qr}\right)/S \\ \lambda_{qr} = \left(v_{qr} - R_r i_{qr} - (\omega - \omega_r)\lambda_{dr}\right)/S \end{cases}$$

$$\begin{bmatrix} i_{ds} \\ i_{qs} \\ i_{dr} \\ i_{qr} \end{bmatrix} = \frac{1}{D_1}\begin{bmatrix} L_r & 0 & -L_m & 0 \\ 0 & L_r & 0 & -L_m \\ -L_m & 0 & L_s & 0 \\ 0 & -L_m & 0 & L_s \end{bmatrix} \cdot \begin{bmatrix} \lambda_{ds} \\ \lambda_{qs} \\ \lambda_{dr} \\ \lambda_{qr} \end{bmatrix}$$

$$\begin{cases} \omega_r = \dfrac{P}{JS}\left(T_e - T_m\right) \\ T_e = \dfrac{3P}{2}\left(i_{qs}\lambda_{ds} - i_{ds}\lambda_{qs}\right) \end{cases}$$

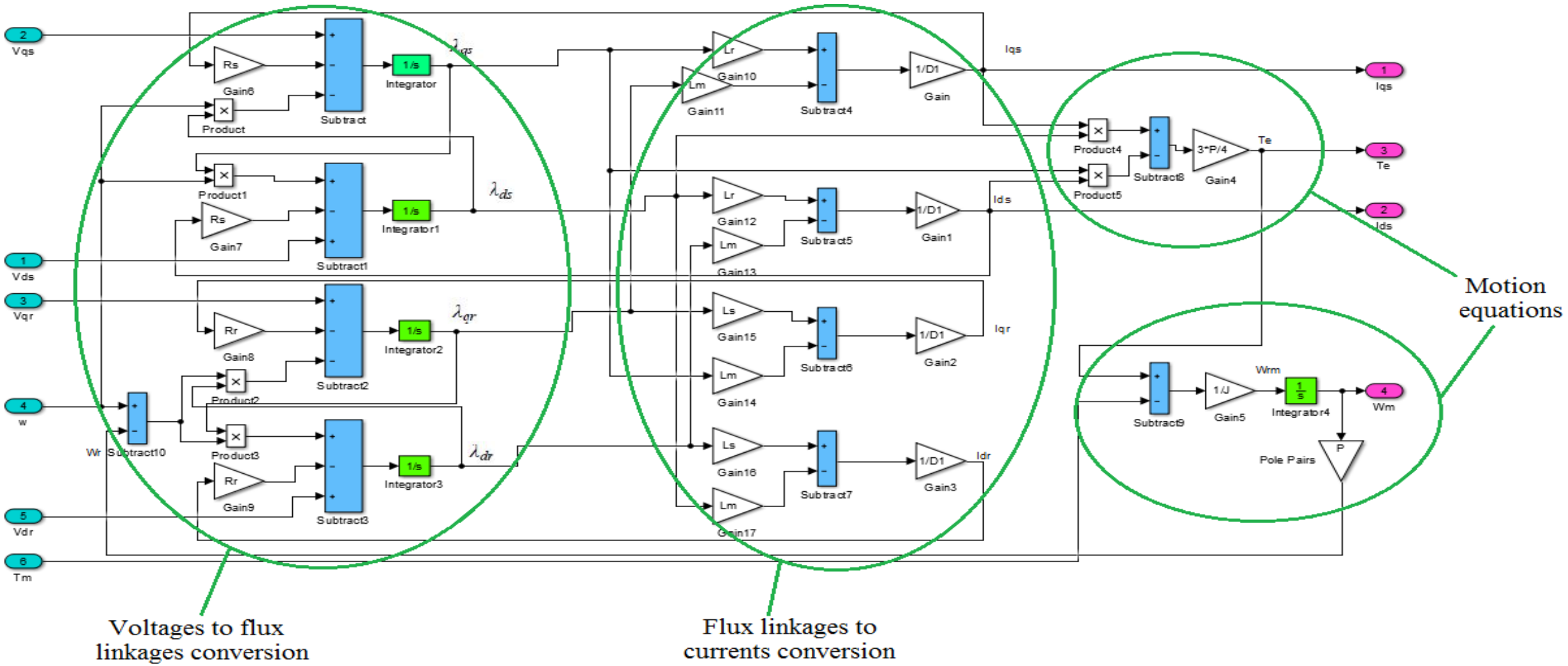

6 Input variables of model: *dq*-axis stator voltages v_{ds} & v_{qs}, rotor voltages v_{dr} & v_{qr}, mechanical torque T_m & speed of arbitrary reference frame ω

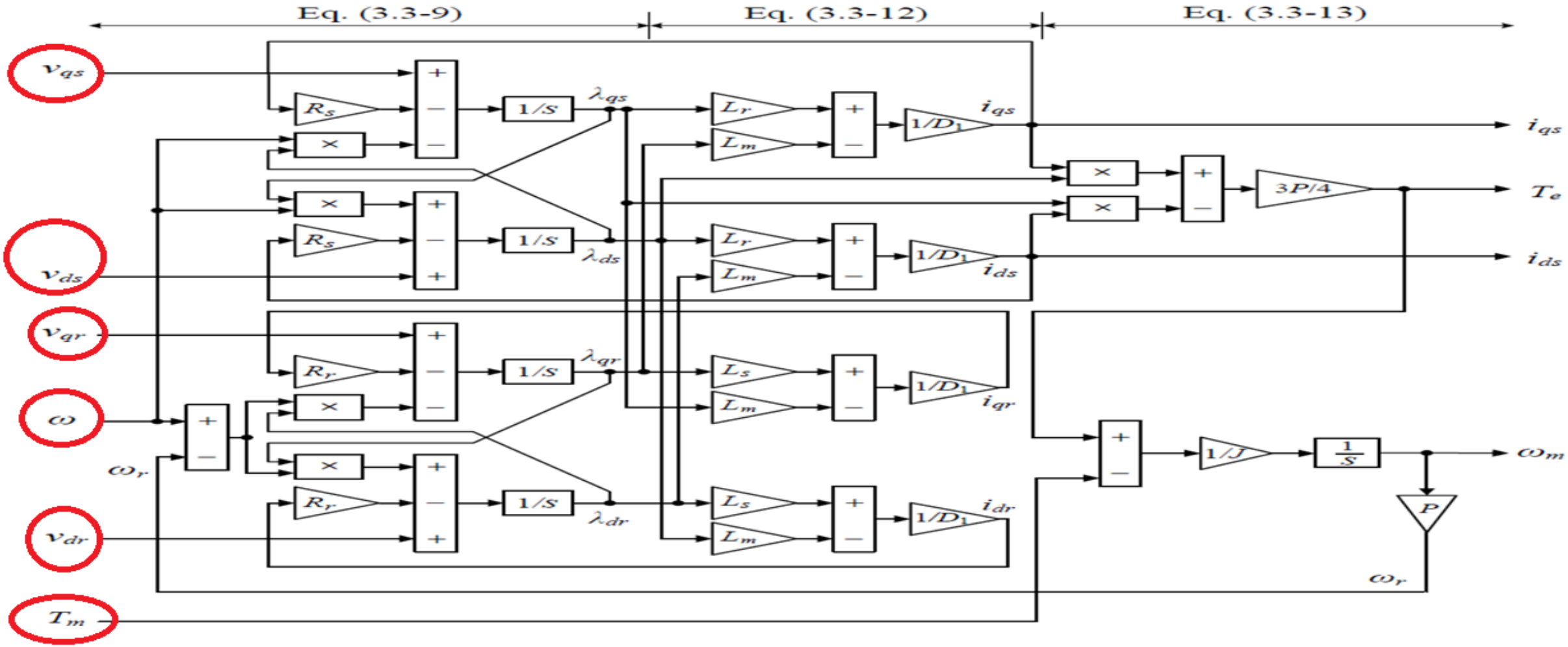

6 Input variables of model: *dq*-axis stator voltages v_{ds} & v_{qs}, rotor voltages v_{dr} & v_{qr}, mechanical torque T_m & speed of arbitrary reference frame ω

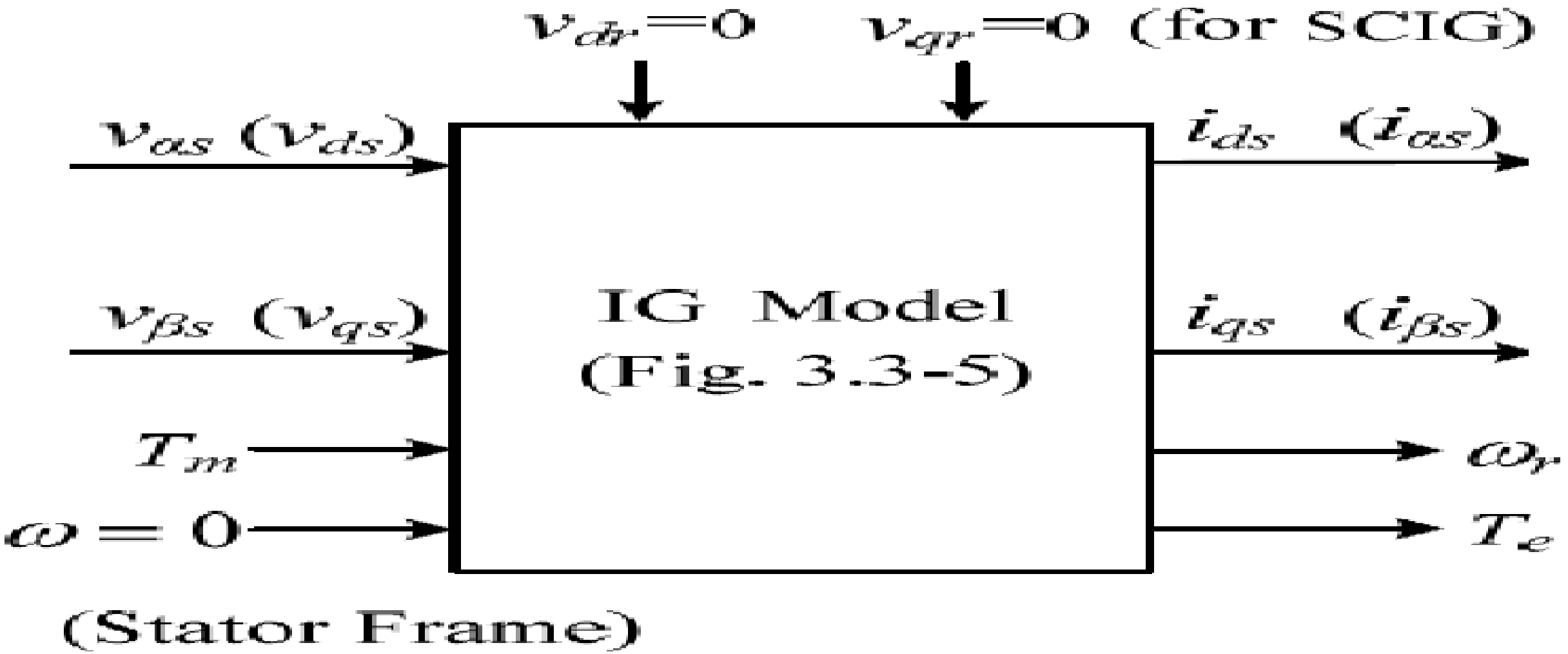

4 output variable : *dq*-axis stator currents, i_{ds} & i_{qs}, electromagnetic torque T_e, & mechanical speed ω_m of generator.

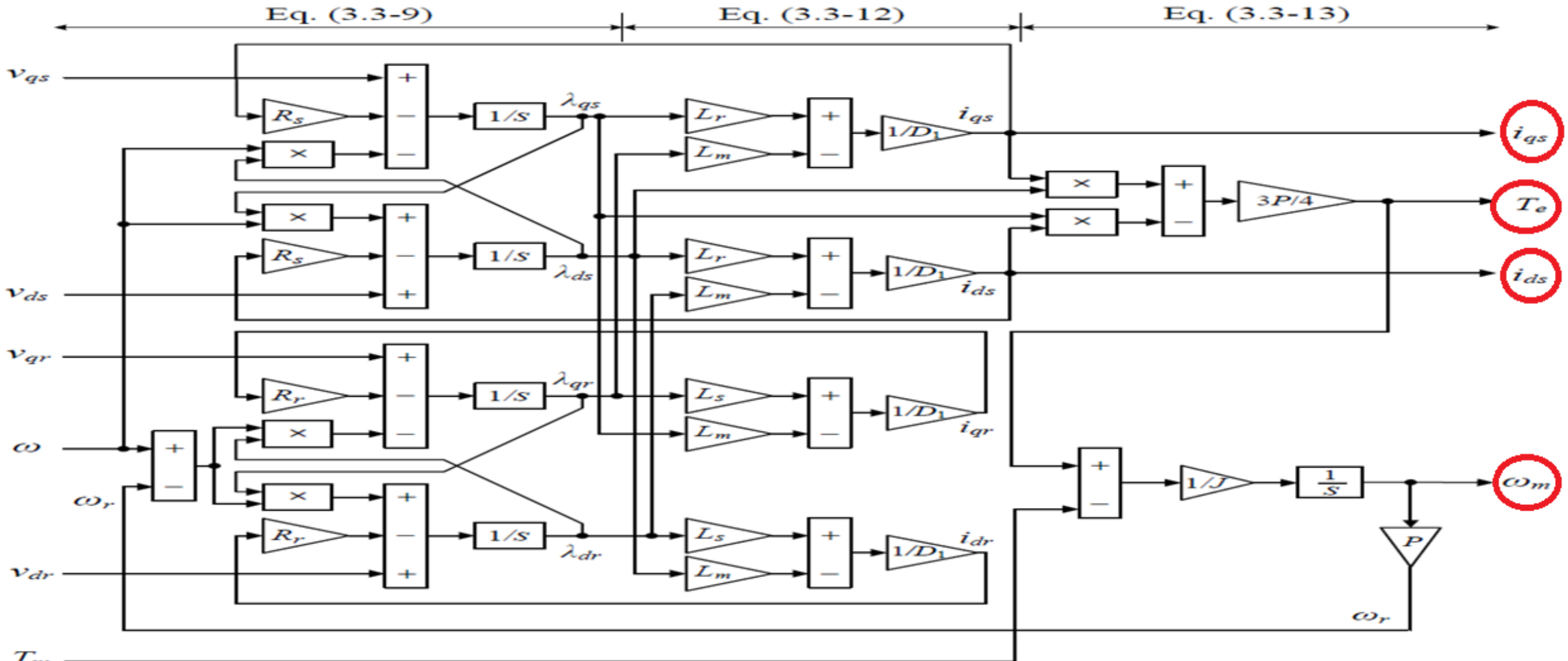

4 output variable : *dq*-axis stator currents, i_{ds} & i_{qs}, electromagnetic torque T_e, & mechanical speed ω_m of generator.

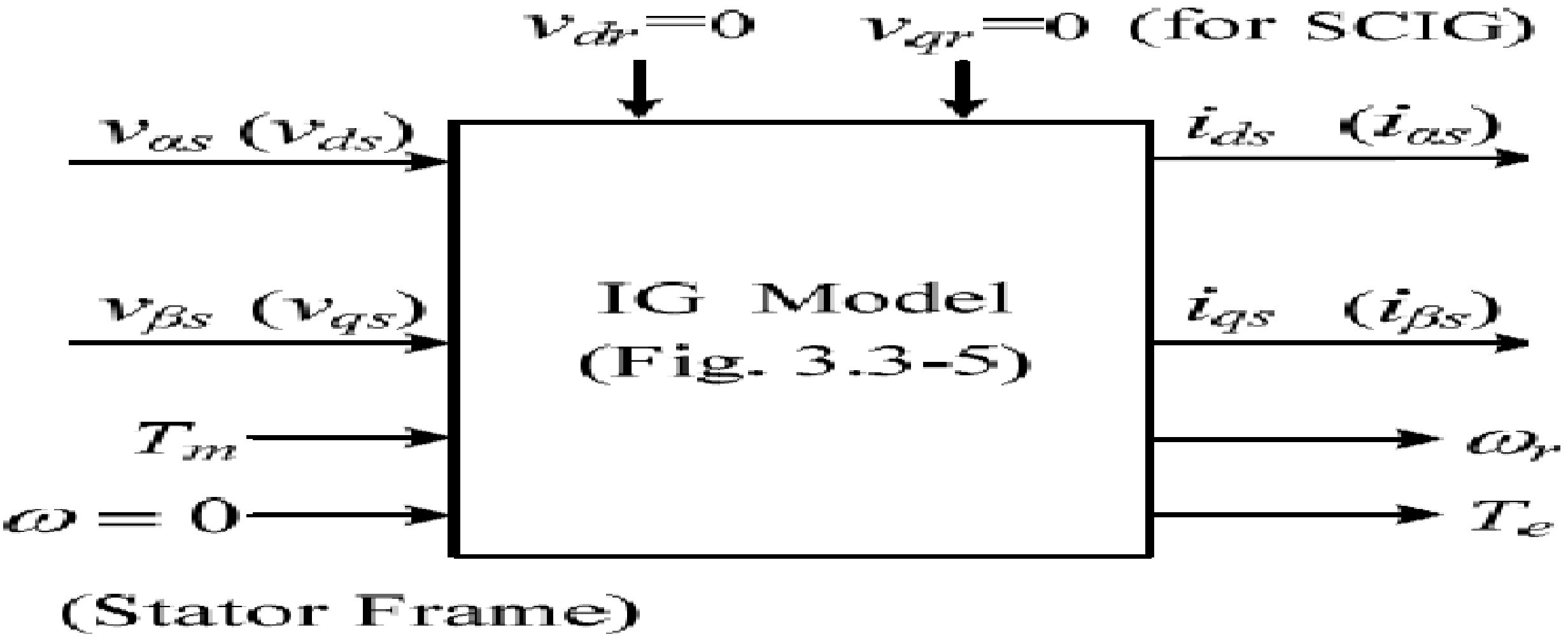

To simulate induction generator in synchronous reference frames, speed of arbitrary reference frame $\omega=\omega_s$

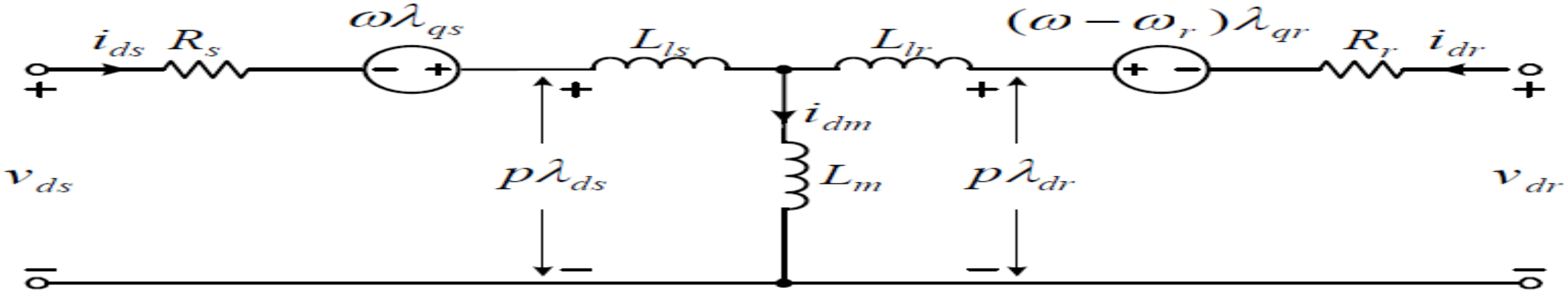

(a) d-axis circuit

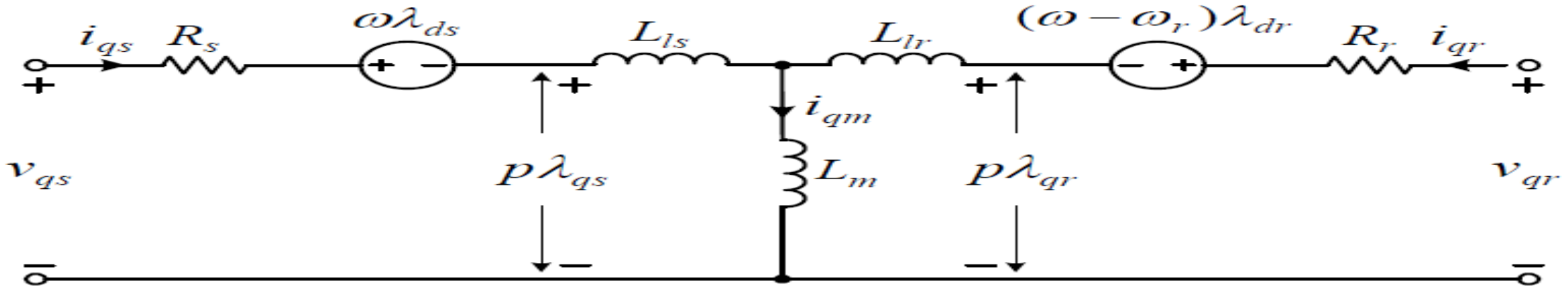

(b) q-axis circuit

To simulate induction generator in stationary reference frames, speed of arbitrary reference frame ω=0.

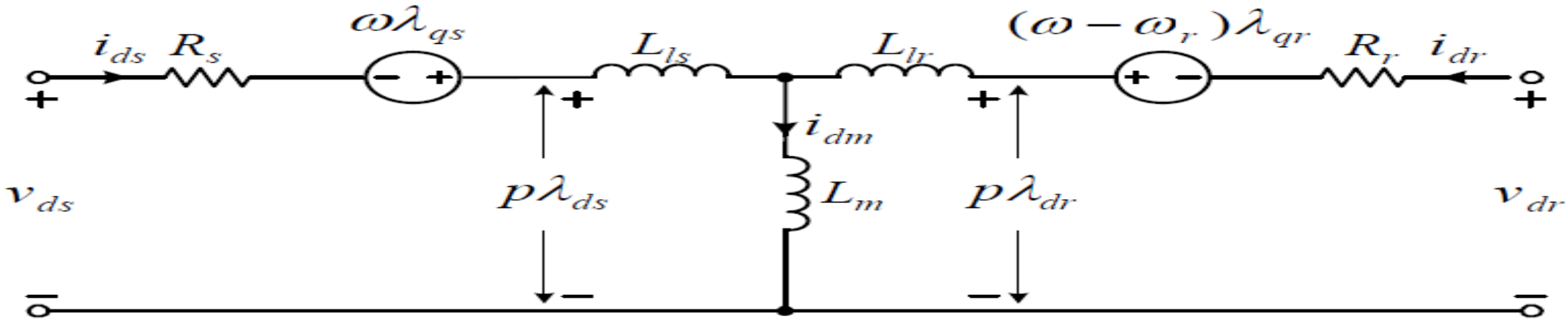

(a) d-axis circuit

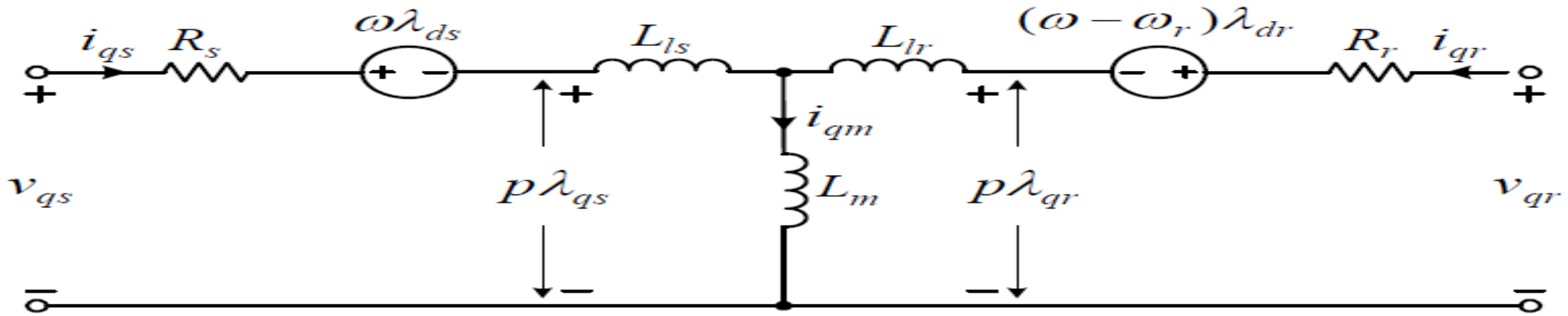

(b) q-axis circuit

Generator Type	**SCIG, 2.3MW/690V/50Hz**	
Rated Output Power	2.30 MW	
Rated Mechanical Power	2.3339 MW	1.0 pu
Rated Apparent Power	2.59 MVA	1.0 pu
Rated Line-to-line Voltage	690 V (rms)	
Rated Phase Voltage	398.4 V (rms)	1.0 pu
Rated Stator Current	2168 A (rms)	1.0 pu
Rated Stator Frequency	50 Hz	1.0 pu
Rated Power Factor	0.888	
Rated Rotor Speed	1512 rpm	1.0pu
Rated Slip	-0.008	
Number of Pole Pairs	2	
Rated Mechanical Torque	14.74 kN.m	1.0 pu
Rated Stator Flux Linkage	1.2748 Wb (rms)	1.0053 pu
Rated Rotor Flux Linkage	1.2096 Wb (rms)	0.9539 pu
Stator Winding Resistance R_s	1.102 mΩ	0.006 pu
Rotor Winding Resistance R_r	1.497 mΩ	0.008 pu
Stator Leakage Inductance L_{ls}	0.06492 mH	0.111 pu
Rotor Leakage Inductance L_{lr}	0.06492 mH	0.111 pu
Magnetizing Inductance L_m	2.13461 mH	3.6481 pu
Moment of Inertia J	1200 kg.m^2	
Inertia Time Constant H	5.8078 sec	
Base Flux Linkage Λ_B	1.2681 Wb (rms)	1.0 pu
Base Impedance Z_B	0.1838 Ω	1.0 pu
Base Inductance L_B	0.58513 mH	1.0 pu
Base Capacitance C_B	17316.17 μF	1.0 pu
Note: $H = J(\omega_m)^2/(2S_B)$		

3.3.5 Induction Generator Transient Characteristics

Transient characteristics of an induction generator based WECS with direct grid connection can be investigated using simulation block diagram.

$$\begin{bmatrix} x_\alpha \\ x_\beta \end{bmatrix} = \frac{2}{3}\begin{bmatrix} 1 & -1/2 & -1/2 \\ 0 & \sqrt{3}/2 & -\sqrt{3}/2 \end{bmatrix} \cdot \begin{bmatrix} x_a \\ x_b \\ x_c \end{bmatrix}$$

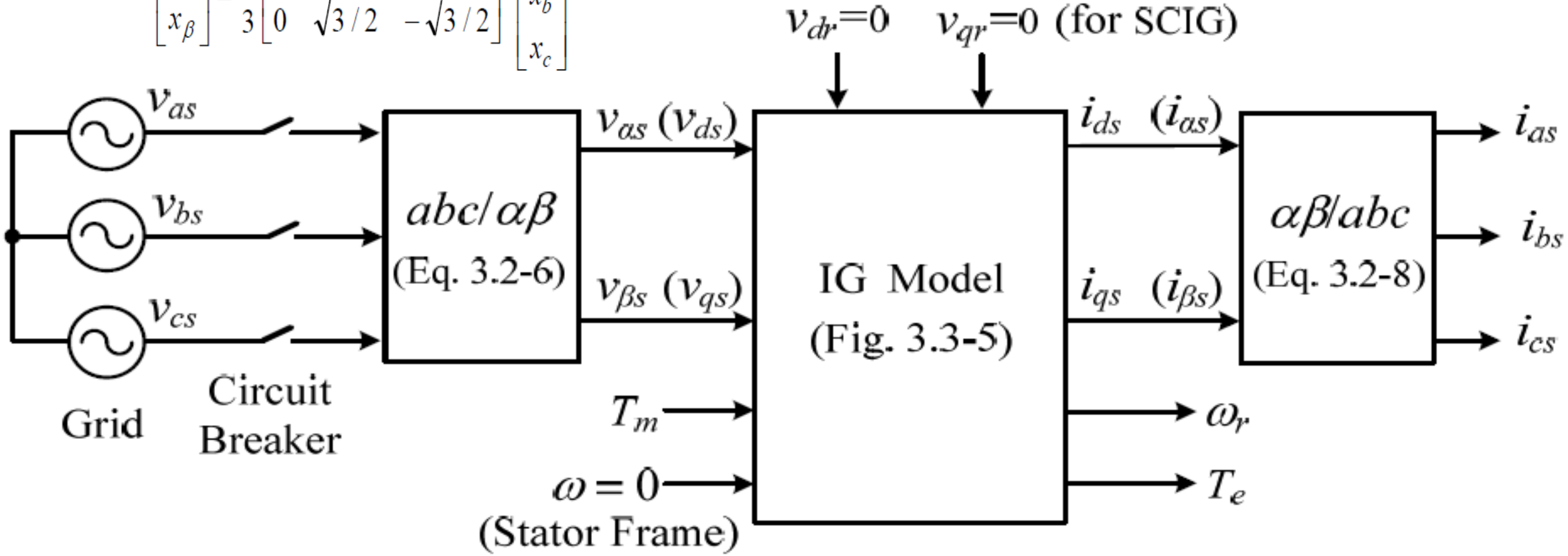

Assuming 3-phase balanced grid, grid voltages v_{as}, v_{bs} & v_{cs} in stationary frame are transformed to 2-phase voltages $v_{\alpha s}$ & $v_{\beta s}$ in $\alpha\beta$ stationary frame through $abc/\alpha\beta$ transformation.

$$\begin{bmatrix} x_\alpha \\ x_\beta \end{bmatrix} = \frac{2}{3}\begin{bmatrix} 1 & -1/2 & -1/2 \\ 0 & \sqrt{3}/2 & -\sqrt{3}/2 \end{bmatrix} \cdot \begin{bmatrix} x_a \\ x_b \\ x_c \end{bmatrix}$$

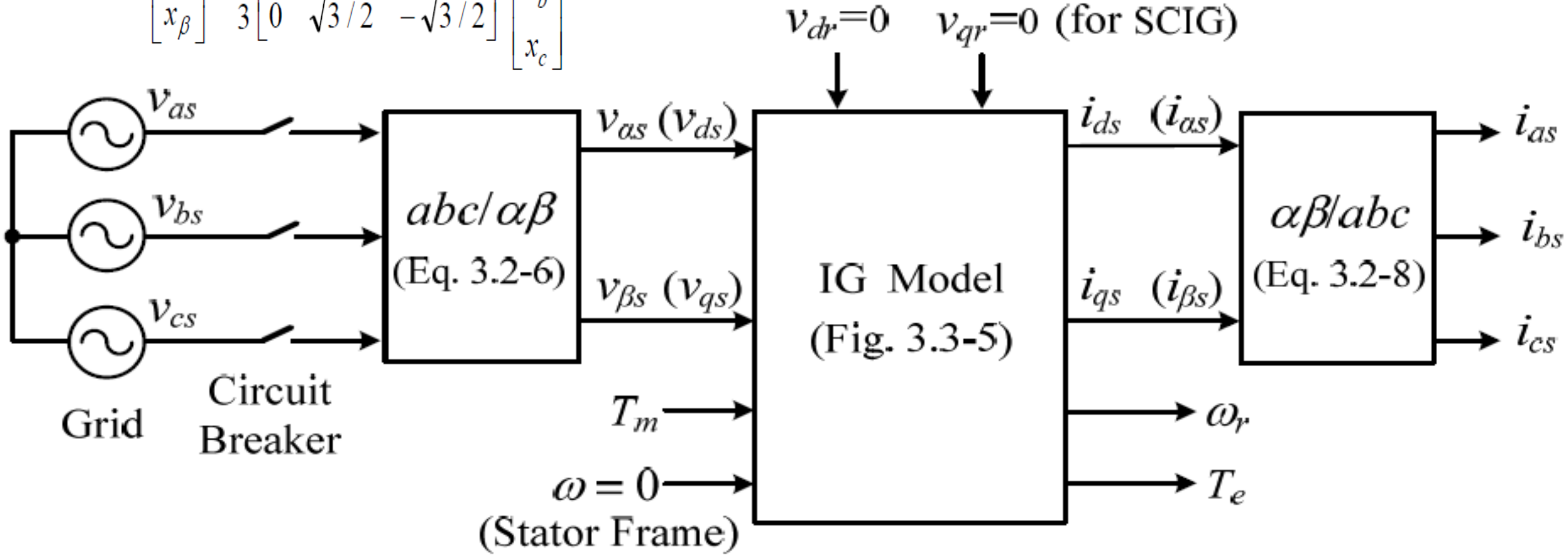

IG model in stationary reference frame should be used by setting speed of arbitrary reference frame to 0 (ω = 0).

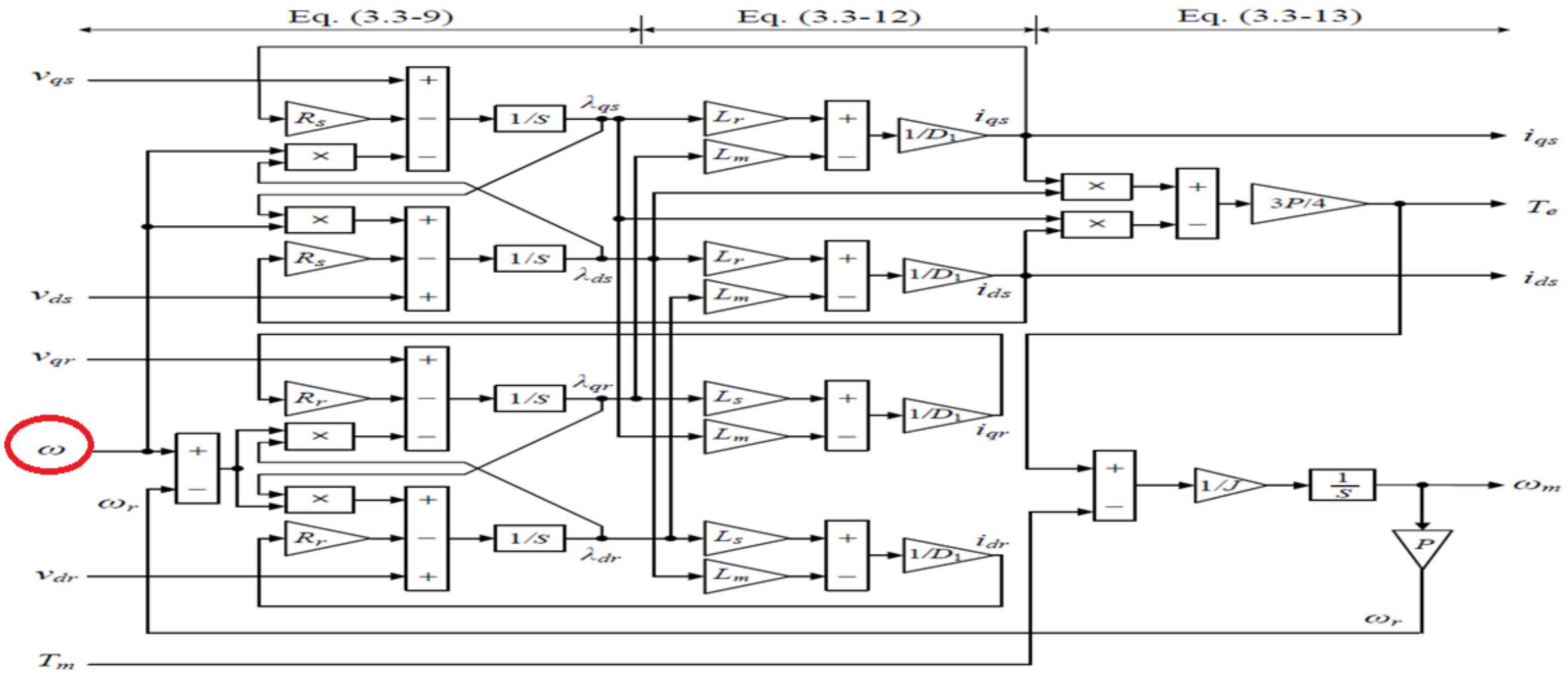

Simulated *dq*-axis stator currents i_{ds} & i_{qs} are also in stationary frame, which are transformed to 3-phase currents i_{as}, i_{bs} and i_{cs} by αβ/*abc* transformation.

$$\begin{bmatrix} x_\alpha \\ x_\beta \end{bmatrix} = \frac{2}{3}\begin{bmatrix} 1 & -1/2 & -1/2 \\ 0 & \sqrt{3}/2 & -\sqrt{3}/2 \end{bmatrix} \cdot \begin{bmatrix} x_a \\ x_b \\ x_c \end{bmatrix}$$

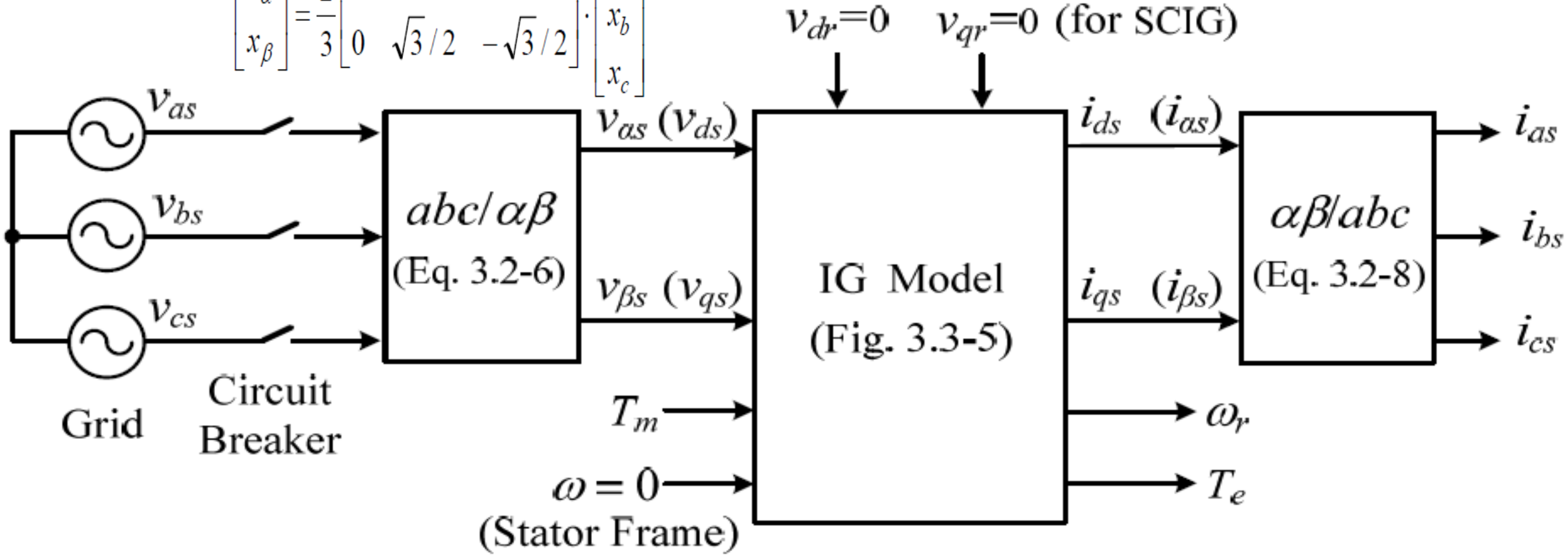

By simulation model you shall obtain exact waveforms for dynamic response of SCIG with direct grid connection.PP68

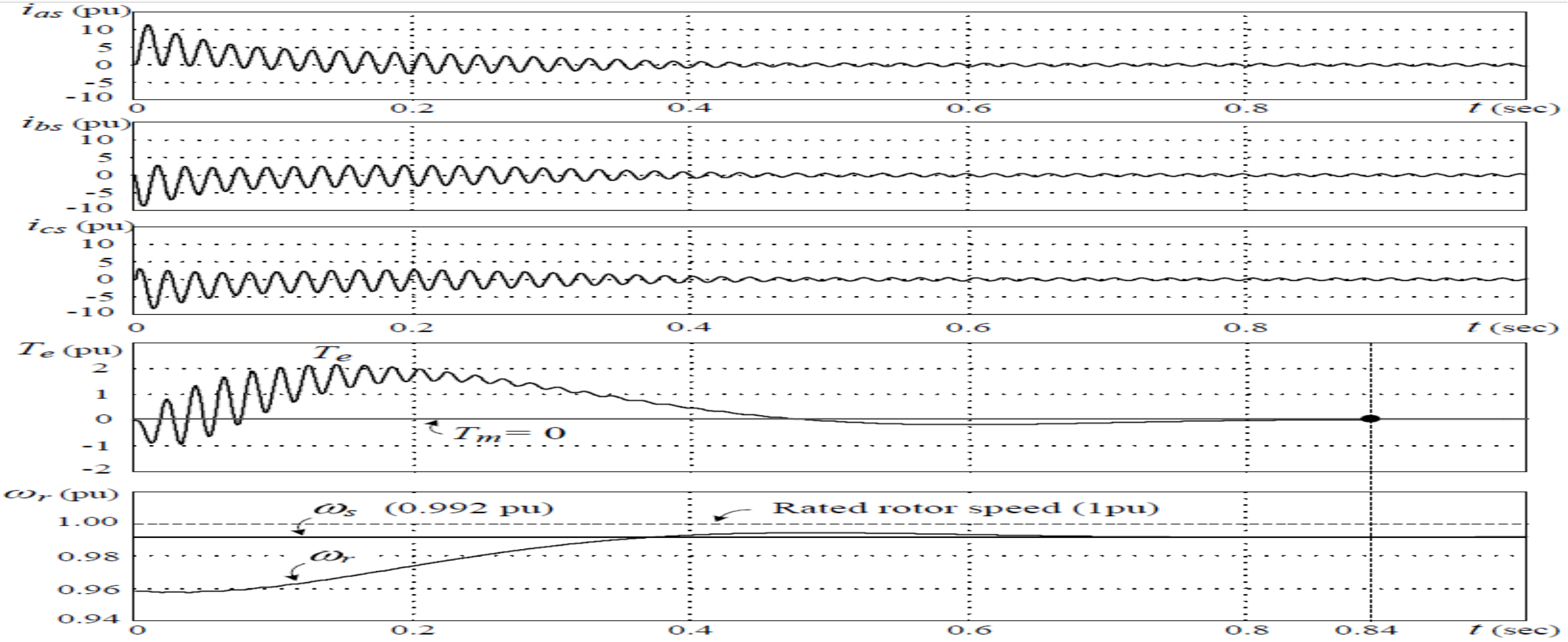

Lets study Simulation model

Transformation (abc to αβ)

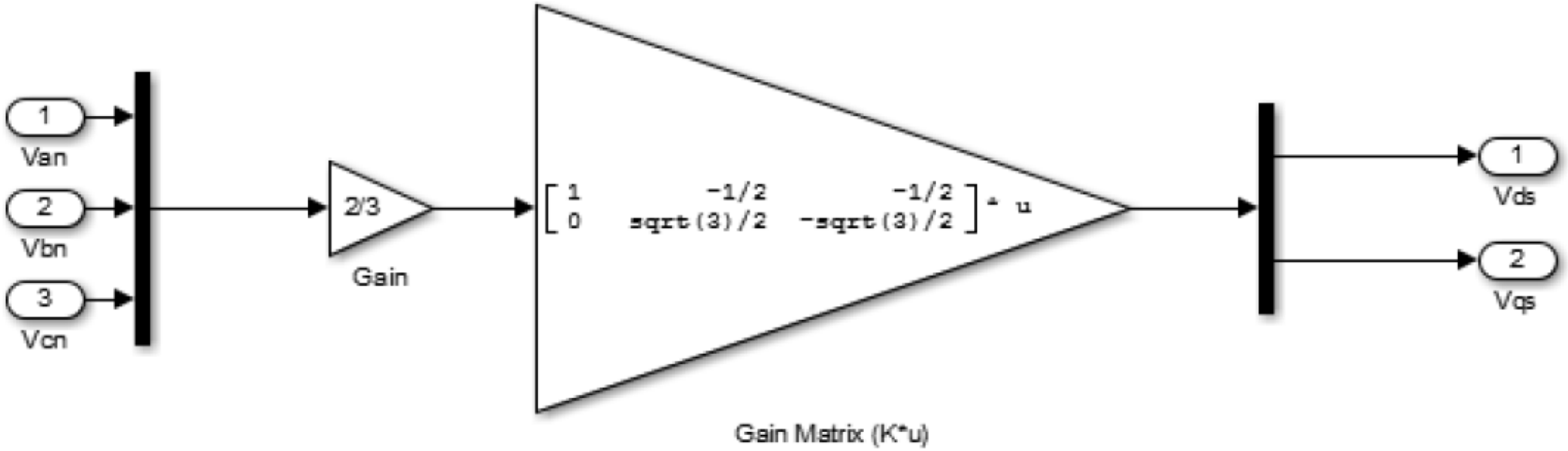

$$\begin{bmatrix} x_\alpha \\ x_\beta \end{bmatrix} = \frac{2}{3}\begin{bmatrix} 1 & -1/2 & -1/2 \\ 0 & \sqrt{3}/2 & -\sqrt{3}/2 \end{bmatrix} \cdot \begin{bmatrix} x_a \\ x_b \\ x_c \end{bmatrix}$$

-1 shows that generator requires negative torque

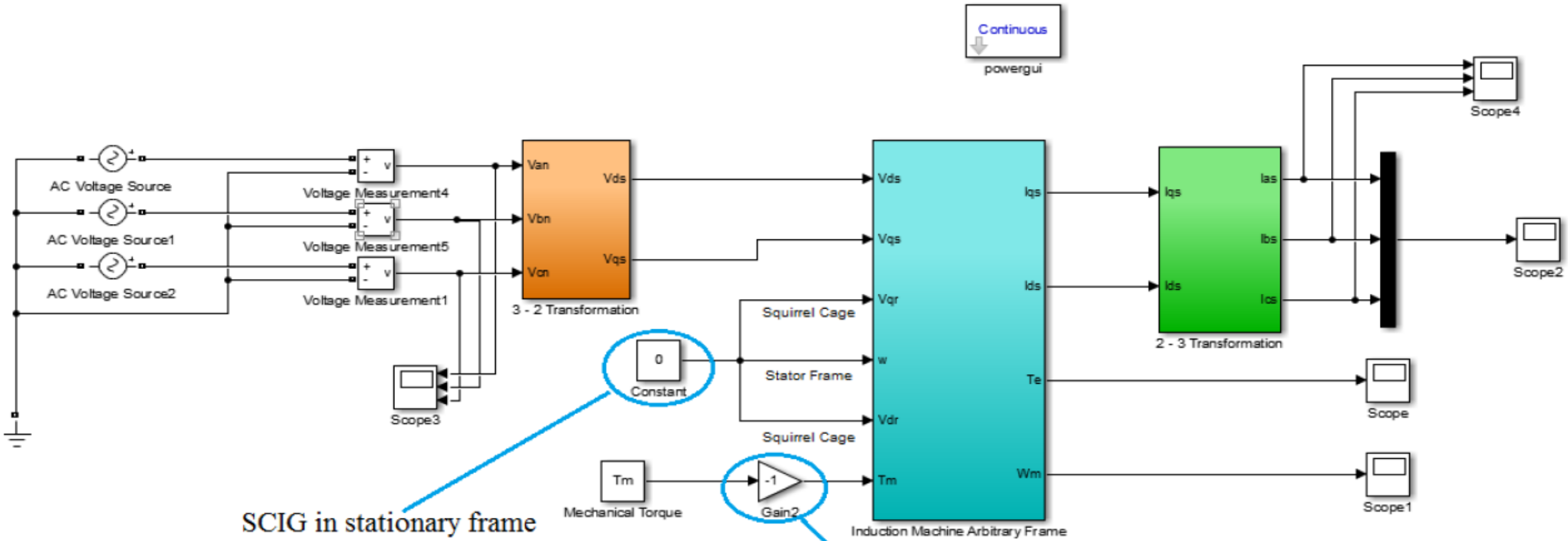

As rotor of SCIG is short circuited so Vdr=Vqr=0

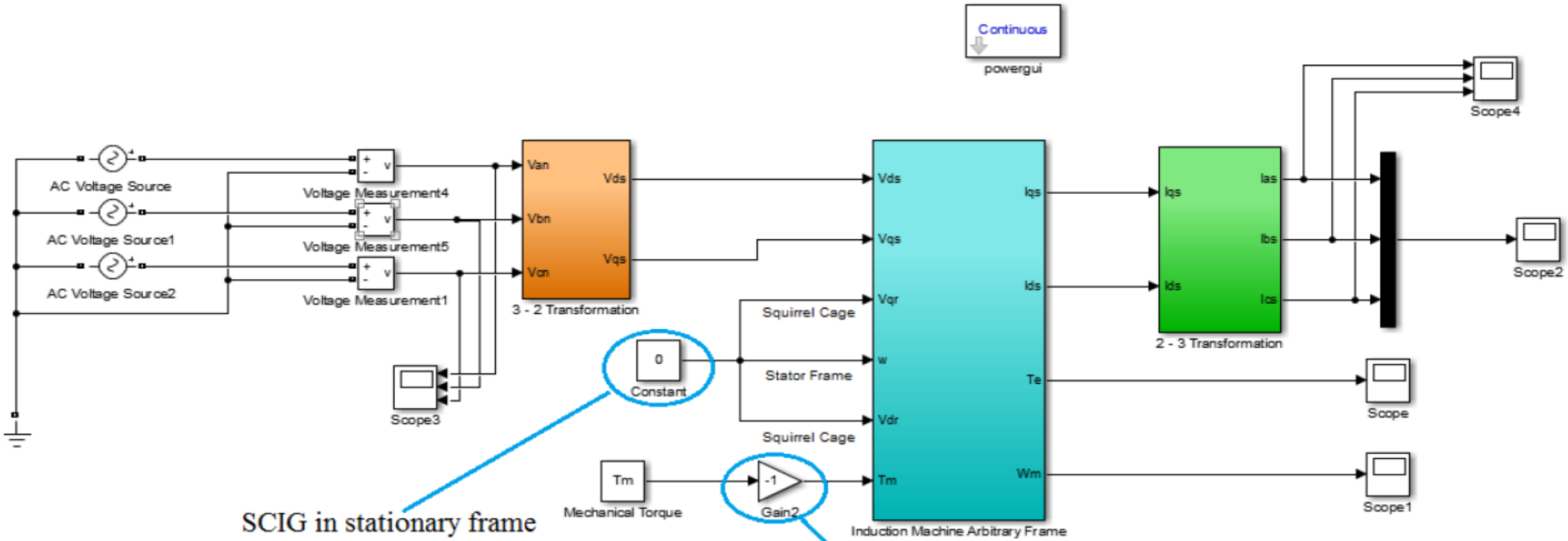

To simulate induction generator in stationary reference frames, speed of arbitrary reference frame ω=0.

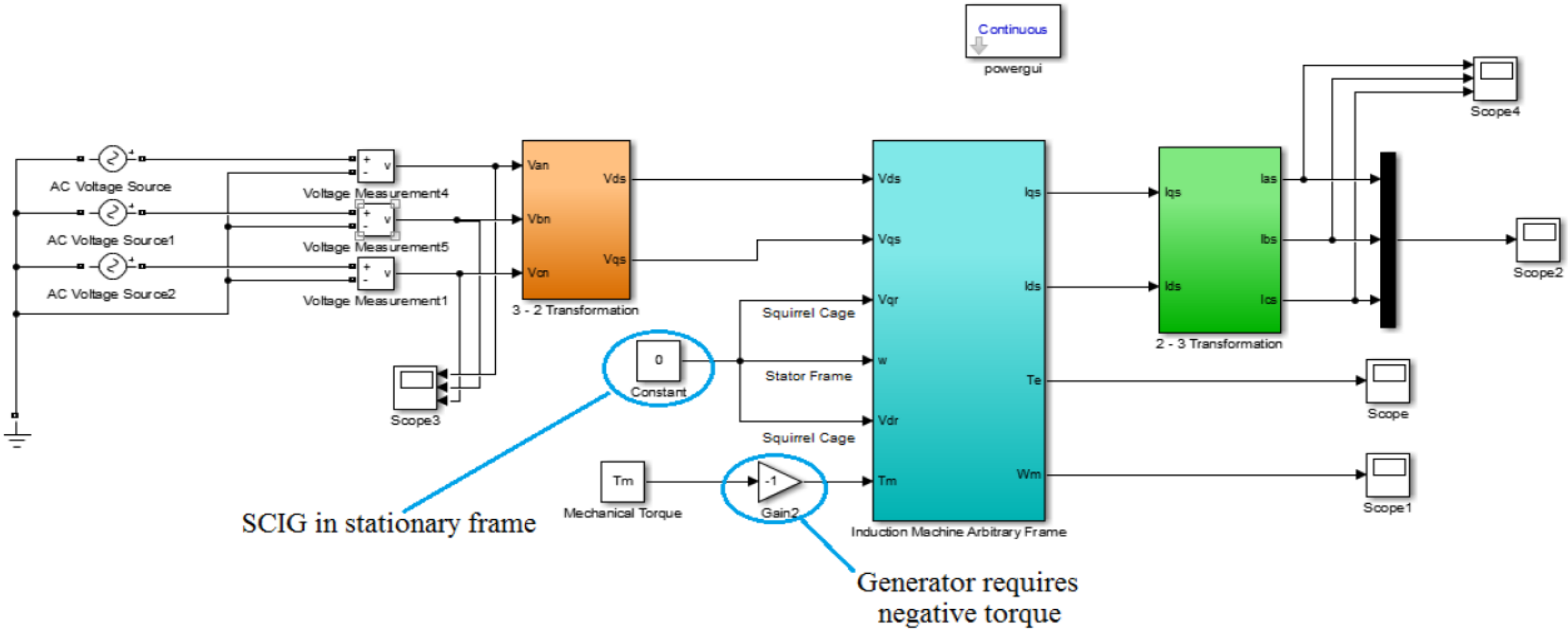

To simulate induction generator in stationary reference frames, speed of arbitrary reference frame ω=0.

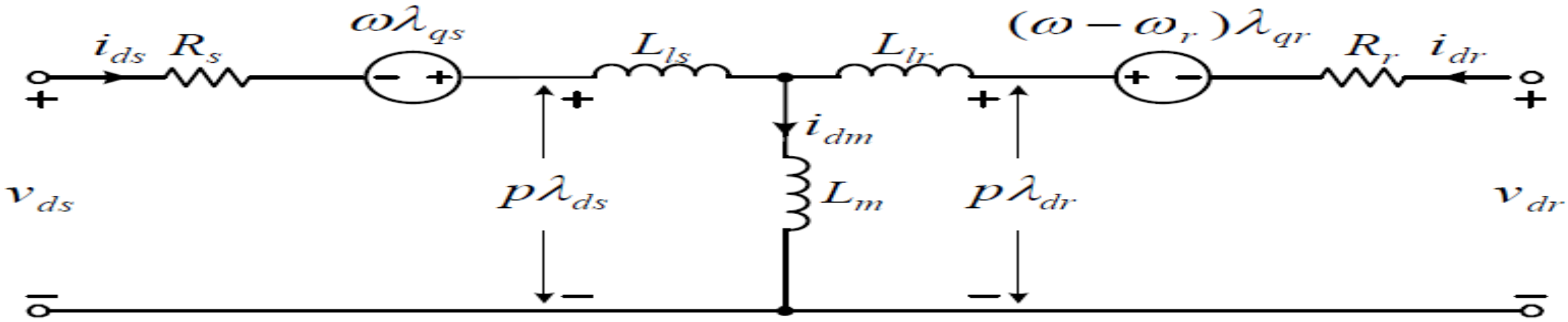

(a) d-axis circuit

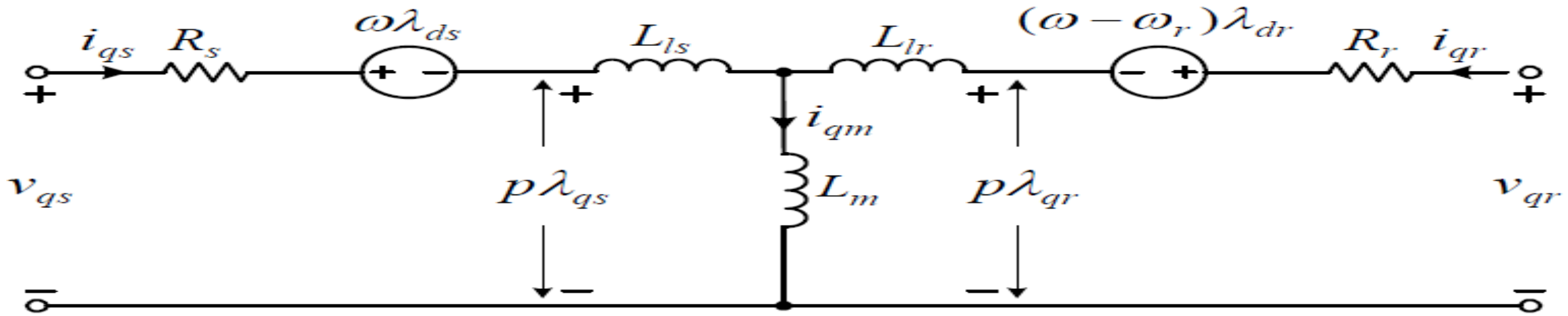

(b) q-axis circuit

Initial condition for integrators:(Rated stator Flux linkage = 0.959 * (peak rated value)=0.959*1.2748*sqrt(2)= 1.73 Wb)

Table B-1 2.3MW/690V/50Hz Squirrel Cage Induction Generator (SCIG) Parameters

Generator Type	**SCIG, 2.3MW/690V/50Hz**	
Rated Output Power	2.30 MW	
Rated Mechanical Power	2.3339 MW	1.0 pu
Rated Apparent Power	2.59 MVA	1.0 pu
Rated Line-to-line Voltage	690 V (rms)	
Rated Phase Voltage	398.4 V (rms)	1.0 pu
Rated Stator Current	2168 A (rms)	1.0 pu
Rated Stator Frequency	50 Hz	1.0 pu
Rated Power Factor	0.888	
Rated Rotor Speed	1512 rpm	1.0pu
Rated Slip	-0.008	
Number of Pole Pairs	2	
Rated Mechanical Torque	14.74 kN.m	1.0 pu
Rated Stator Flux Linkage	1.2748 Wb (rms)	1.0053 pu
Rated Rotor Flux Linkage	1.2096 Wb (rms)	0.9539 pu
Stator Winding Resistance R_s	1.102 mΩ	0.006 pu
Rotor Winding Resistance R_r	1.497 mΩ	0.008 pu
Stator Leakage Inductance L_{ls}	0.06492 mH	0.111 pu
Rotor Leakage Inductance L_{lr}	0.06492 mH	0.111 pu
Magnetizing Inductance L_m	2.13461 mH	3.6481 pu
Moment of Inertia J	1200 kg.m^2	
Inertia Time Constant H	5.8078 sec	
Base Flux Linkage Λ_B	1.2681 Wb (rms)	1.0 pu
Base Impedance Z_B	0.1838 Ω	1.0 pu
Base Inductance L_B	0.58513 mH	1.0 pu
Base Capacitance C_B	17316.17 μF	1.0 pu
Note: $H = J(\omega_m)^2/(2S_B)$		

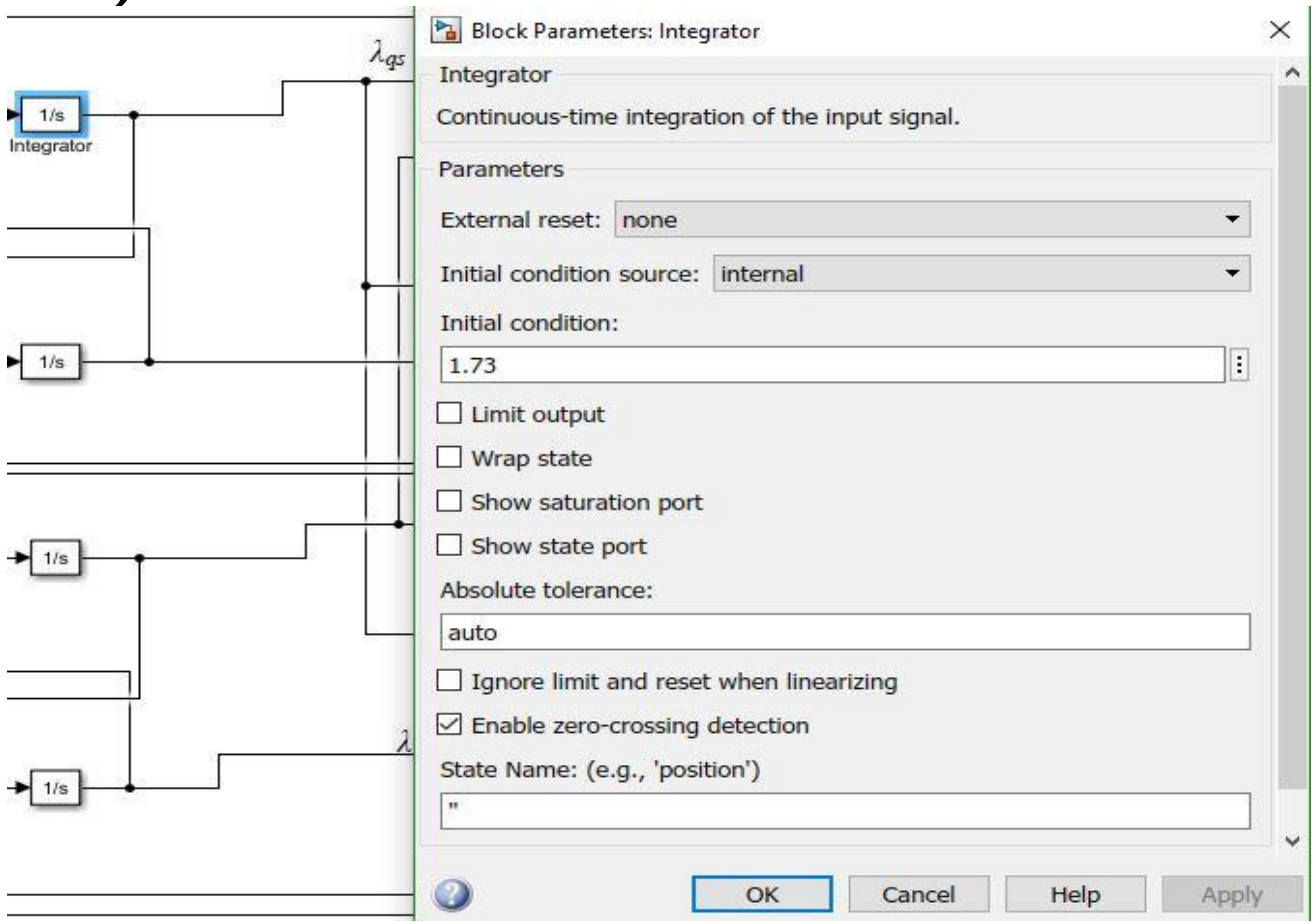

(Rated rotor Flux linkage = 0.959 * (peak rated value) =0.959*1.2096*sqrt(2)= 1.64 Wb)

Table B-1 2.3MW/690V/50Hz Squirrel Cage Induction Generator (SCIG) Parameters

Generator Type	**SCIG, 2.3MW/690V/50Hz**	
Rated Output Power	2.30 MW	
Rated Mechanical Power	2.3339 MW	1.0 pu
Rated Apparent Power	2.59 MVA	1.0 pu
Rated Line-to-line Voltage	690 V (rms)	
Rated Phase Voltage	398.4 V (rms)	1.0 pu
Rated Stator Current	2168 A (rms)	1.0 pu
Rated Stator Frequency	50 Hz	1.0 pu
Rated Power Factor	0.888	
Rated Rotor Speed	1512 rpm	1.0pu
Rated Slip	-0.008	
Number of Pole Pairs	2	
Rated Mechanical Torque	14.74 kN.m	1.0 pu
Rated Stator Flux Linkage	1.2748 Wb (rms)	1.0053 pu
Rated Rotor Flux Linkage	1.2096 Wb (rms)	0.9539 pu
Stator Winding Resistance R_s	1.102 mΩ	0.006 pu
Rotor Winding Resistance R_r	1.497 mΩ	0.008 pu
Stator Leakage Inductance L_{ls}	0.06492 mH	0.111 pu
Rotor Leakage Inductance L_{lr}	0.06492 mH	0.111 pu
Magnetizing Inductance L_m	2.13461 mH	3.6481 pu
Moment of Inertia J	1200 kg.m^2	
Inertia Time Constant H	5.8078 sec	
Base Flux Linkage Λ_B	1.2681 Wb (rms)	1.0 pu
Base Impedance Z_B	0.1838 Ω	1.0 pu
Base Inductance L_B	0.58513 mH	1.0 pu
Base Capacitance C_B	17316.17 μF	1.0 pu
Note: $H = J(\omega_m)^2/(2S_B)$		

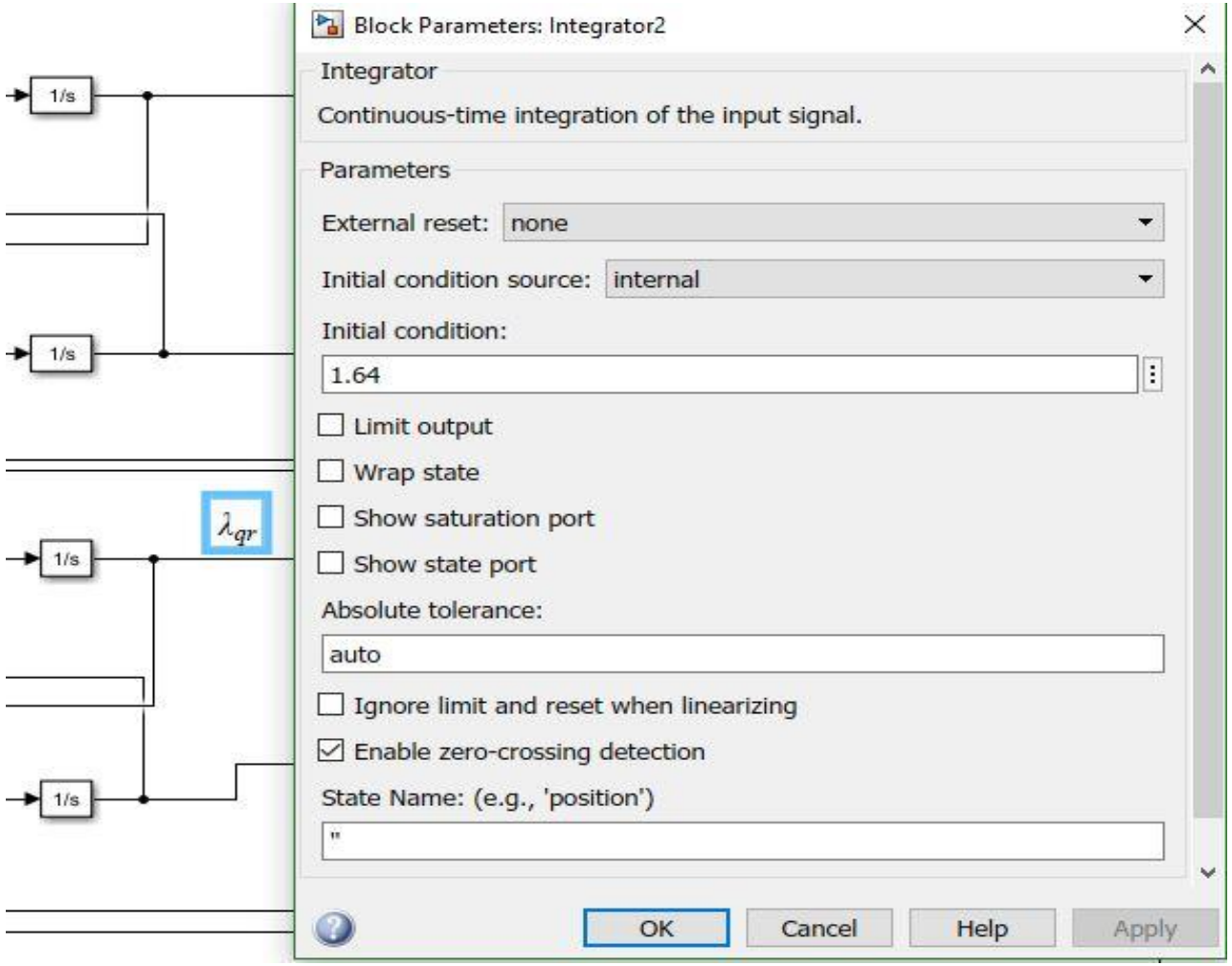

(speed=0.959 Per unit * Rated speed = 0.959 * 1512rpm = 1450 rpm = 1450 * (2*pi/60) rad/sec = 151.84 rad/sec)

Table B-1 2.3MW/690V/50Hz Squirrel Cage Induction Generator (SCIG) Parameters

Generator Type	**SCIG, 2.3MW/690V/50Hz**	
Rated Output Power	2.30 MW	
Rated Mechanical Power	2.3339 MW	1.0 pu
Rated Apparent Power	2.59 MVA	1.0 pu
Rated Line-to-line Voltage	690 V (rms)	
Rated Phase Voltage	398.4 V (rms)	1.0 pu
Rated Stator Current	2168 A (rms)	1.0 pu
Rated Stator Frequency	50 Hz	1.0 pu
Rated Power Factor	0.888	
Rated Rotor Speed	1512 rpm	1.0pu
Rated Slip	-0.008	
Number of Pole Pairs	2	
Rated Mechanical Torque	14.74 kN.m	1.0 pu
Rated Stator Flux Linkage	1.2748 Wb (rms)	1.0053 pu
Rated Rotor Flux Linkage	1.2096 Wb (rms)	0.9539 pu
Stator Winding Resistance R_s	1.102 mΩ	0.006 pu
Rotor Winding Resistance R_r	1.497 mΩ	0.008 pu
Stator Leakage Inductance L_{ls}	0.06492 mH	0.111 pu
Rotor Leakage Inductance L_{lr}	0.06492 mH	0.111 pu
Magnetizing Inductance L_m	2.13461 mH	3.6481 pu
Moment of Inertia J	1200 kg.m^2	
Inertia Time Constant H	5.8078 sec	
Base Flux Linkage Λ_B	1.2681 Wb (rms)	1.0 pu
Base Impedance Z_B	0.1838 Ω	1.0 pu
Base Inductance L_B	0.58513 mH	1.0 pu
Base Capacitance C_B	17316.17 μF	1.0 pu
Note: $H = J(\omega_m)^2/(2S_B)$		

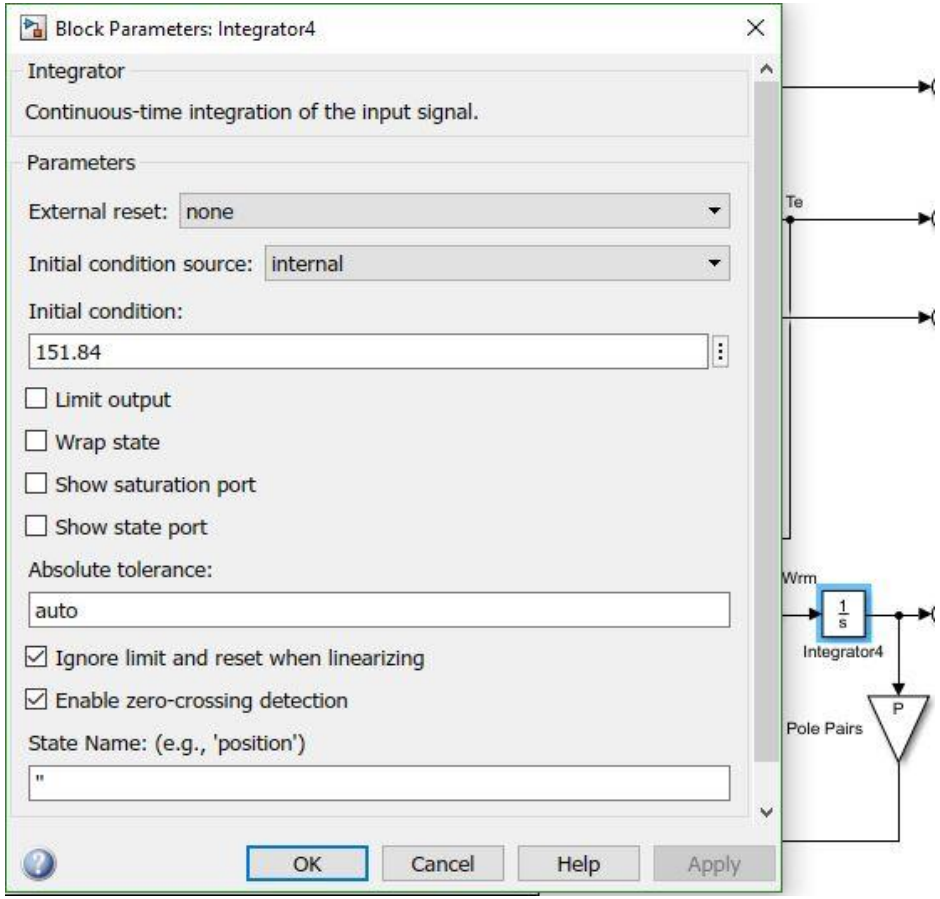

2-3 Transformation (αβ to abc)

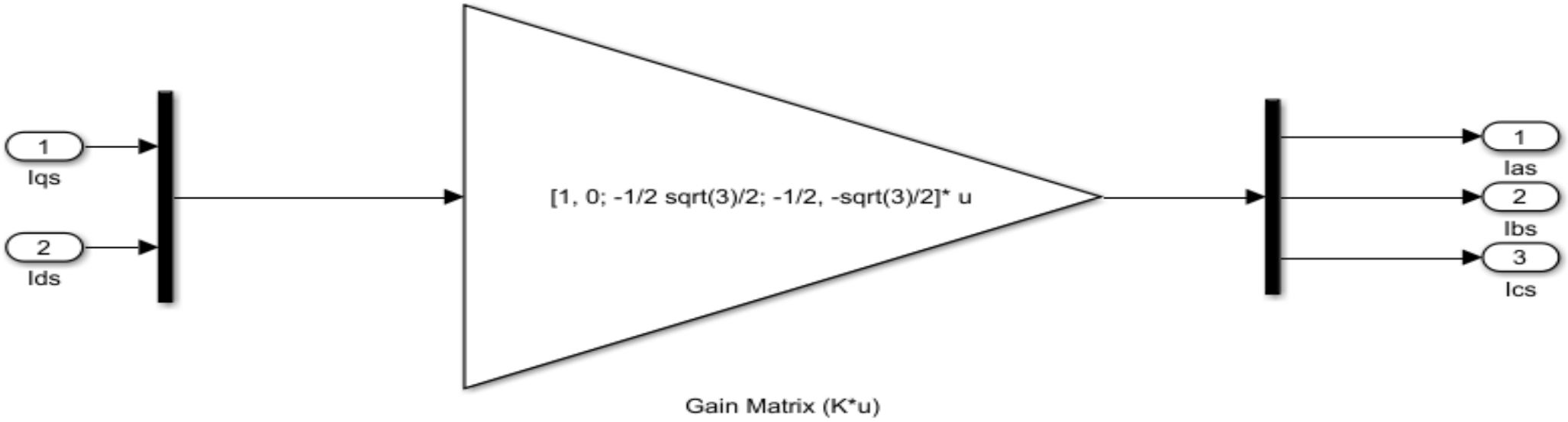

$$\begin{bmatrix} x_a \\ x_b \\ x_c \end{bmatrix} = \begin{bmatrix} 1 & 0 \\ -1/2 & \sqrt{3}/2 \\ -1/2 & -\sqrt{3}/2 \end{bmatrix} \cdot \begin{bmatrix} x_\alpha \\ x_\beta \end{bmatrix}$$

.m file

- clc ; clearvars; close all;
- %Following are constants%
- P = 2;
- Rs = 1.102*10^(-3);
- Rr = 1.497*10^(-3);
- Ls = (0.06492*10^(-3)) + (2.1346*10^(-3));
- Lr = (0.06492*10^(-3)) + (2.1346*10^(-3));
- Lm = 2.1346*10^(-3);
- J = 1200;
- D1 = (Ls*Lr) - (Lm.^2);
- Tm = 14.74* 10^3;

Workspace

Name	Value
D1	2.8137e-07
J	1200
Lm	0.0021
Lr	0.0022
Ls	0.0022
P	2
Rr	0.0015
Rs	0.0011
Tm	14740
tout	*1000001x1 double*

Please submit detailed report and discussion on waveform along with simulation model.

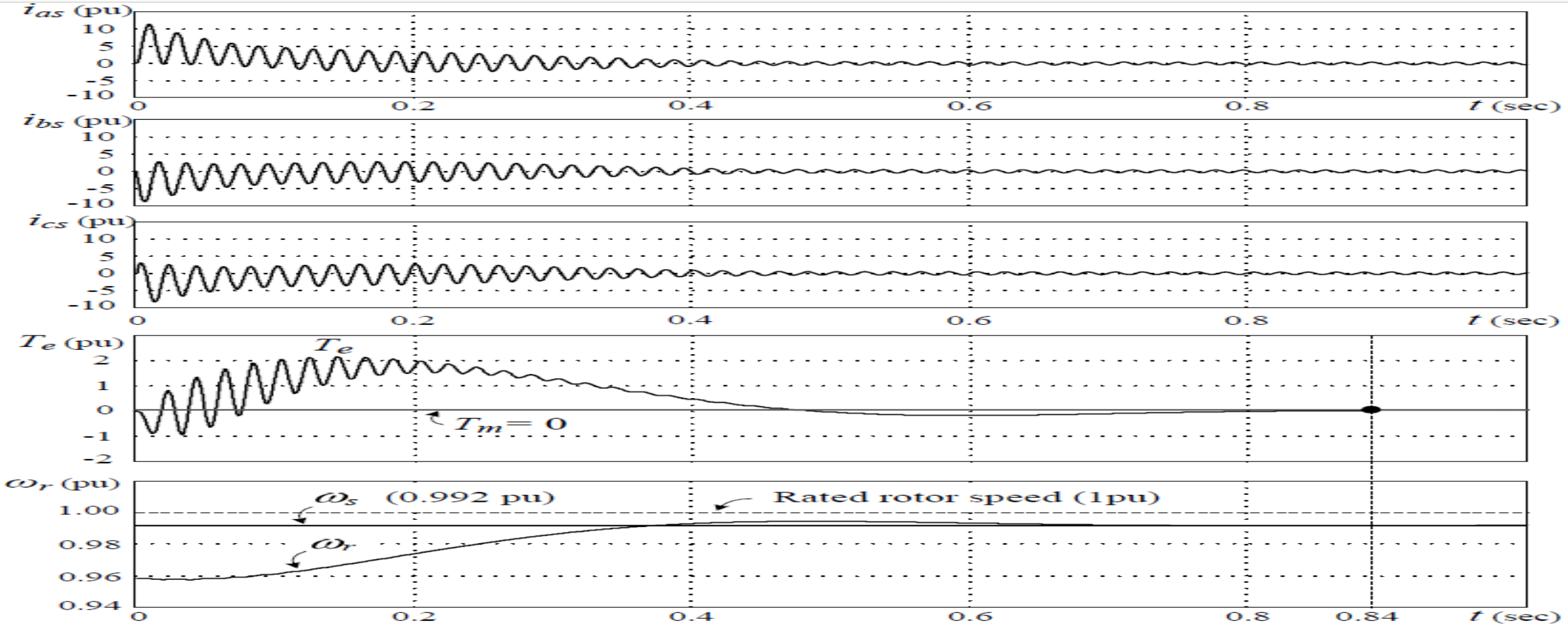

ii)Also verify Direct Grid Connection of SCIG with Constant Rotor Speed

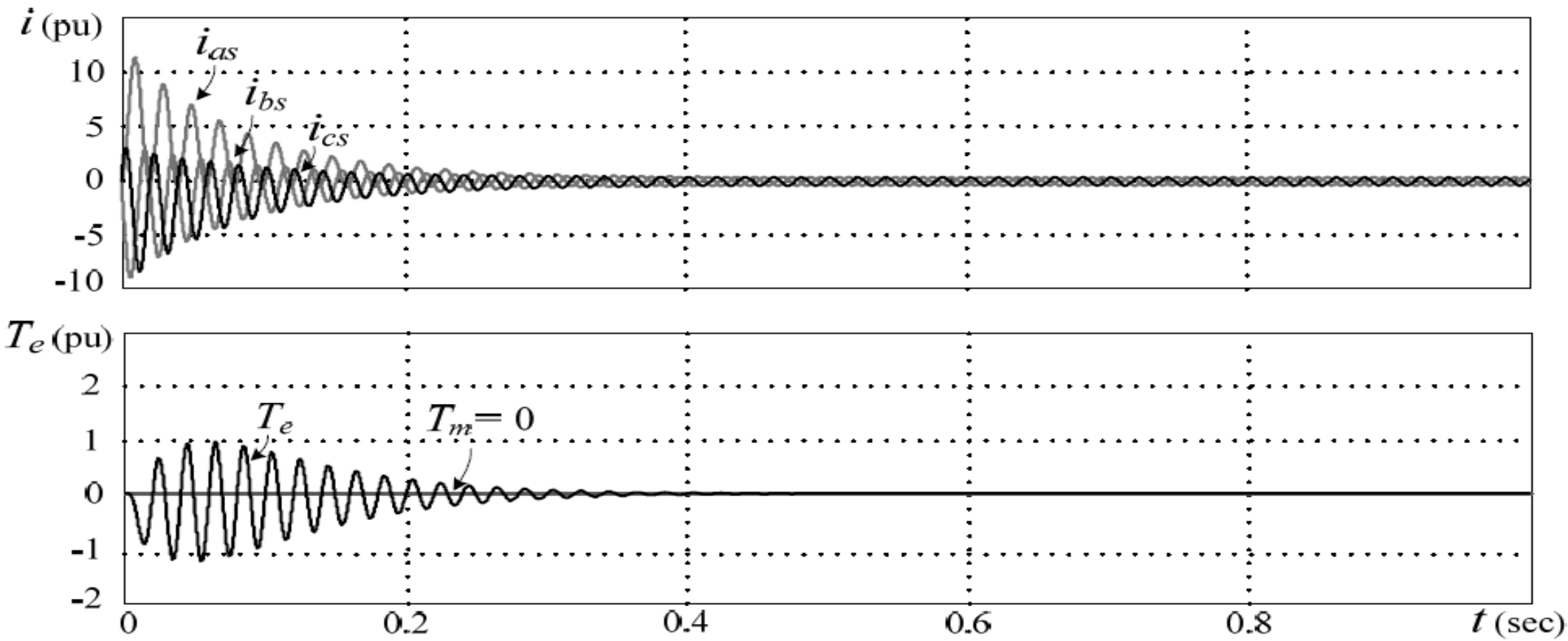

3.3.6 Steady-state Equivalent Circuit

4 steps for steady-state equivalent circuit

1. Set the arbitrary ω in equation to the synchronous speed ω_s

$$\begin{cases} \vec{v}_s = R_s \vec{i}_s + p\vec{\lambda}_s + j\omega\vec{\lambda}_s \\ \vec{v}_r = R_r \vec{i}_r + p\vec{\lambda}_r + j(\omega - \omega_r)\vec{\lambda}_r \end{cases}$$

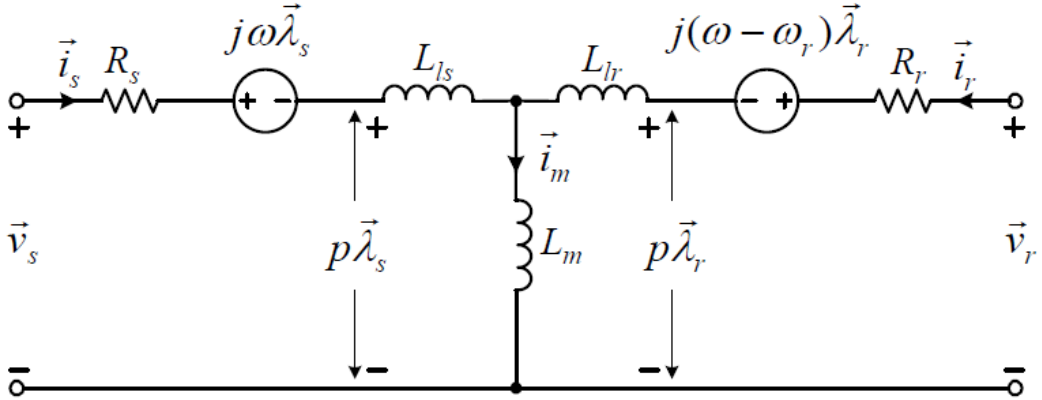

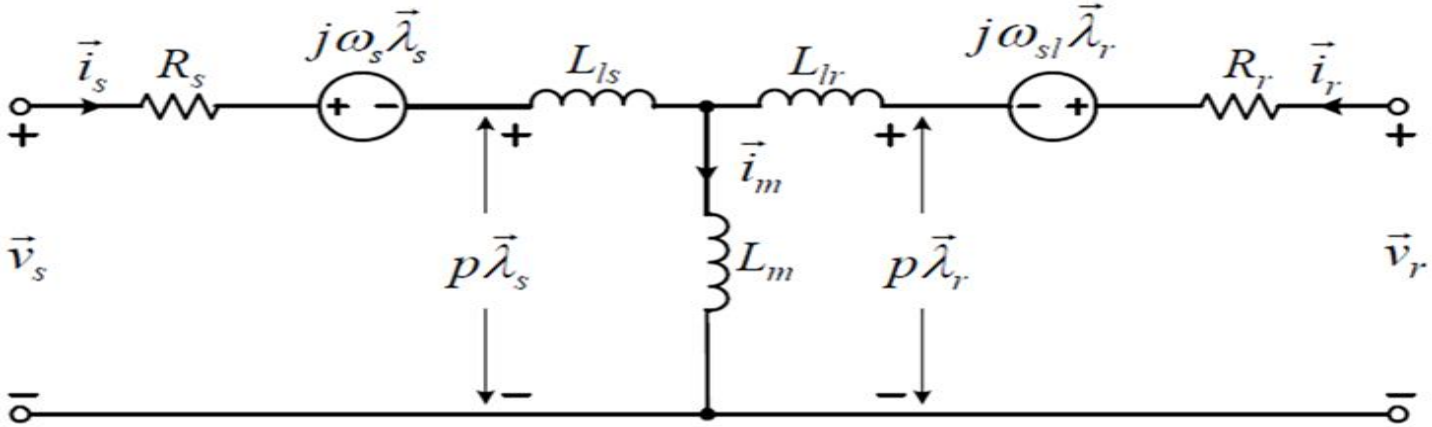

2. Set derivative terms: $p\vec{\lambda}_s$ & $p\vec{\lambda}_r$ =0

$$\begin{cases} \vec{v}_s = R_s \vec{i}_s + p\vec{\lambda}_s + j\omega\vec{\lambda}_s \\ \vec{v}_r = R_r \vec{i}_r + p\vec{\lambda}_r + j(\omega - \omega_r)\vec{\lambda}_r \end{cases}$$

$$\begin{cases} \vec{v}_s = R_s \vec{i}_s + 0 + j\omega\vec{\lambda}_s \\ \vec{v}_r = R_r \vec{i}_r + 0 + j(\omega - \omega_r)\vec{\lambda}_r \end{cases}$$

- All variables of IG in synchronous frame are of dc quantity in steady state, and their derivatives=0.

3. Replace all **space vectors** with their corresponding phasors.

$$\begin{cases} \vec{v}_s = R_s \vec{i}_s + 0 + j\omega\vec{\lambda}_s \\ \vec{v}_r = R_r \vec{i}_r + 0 + j(\omega - \omega_r)\vec{\lambda}_r \end{cases}$$

- e.g, Stator voltage vector $\vec{v}_s$ is replaced with stator voltage phasor $\overline{V}_s$

where $\vec{v}_s = v_{ds} + jv_{qs}$, $\overline{V}_s = \mathrm{Re}(V_s) + j\,\mathrm{Im}(V_s)$

Relationship between *Vs* and *vs* is:

Vs = vs / 2

4. Reverse rotor current $\vec{i}_r$ direction i.e, rotor current flows out of rotor circuit instead of into rotor circuit

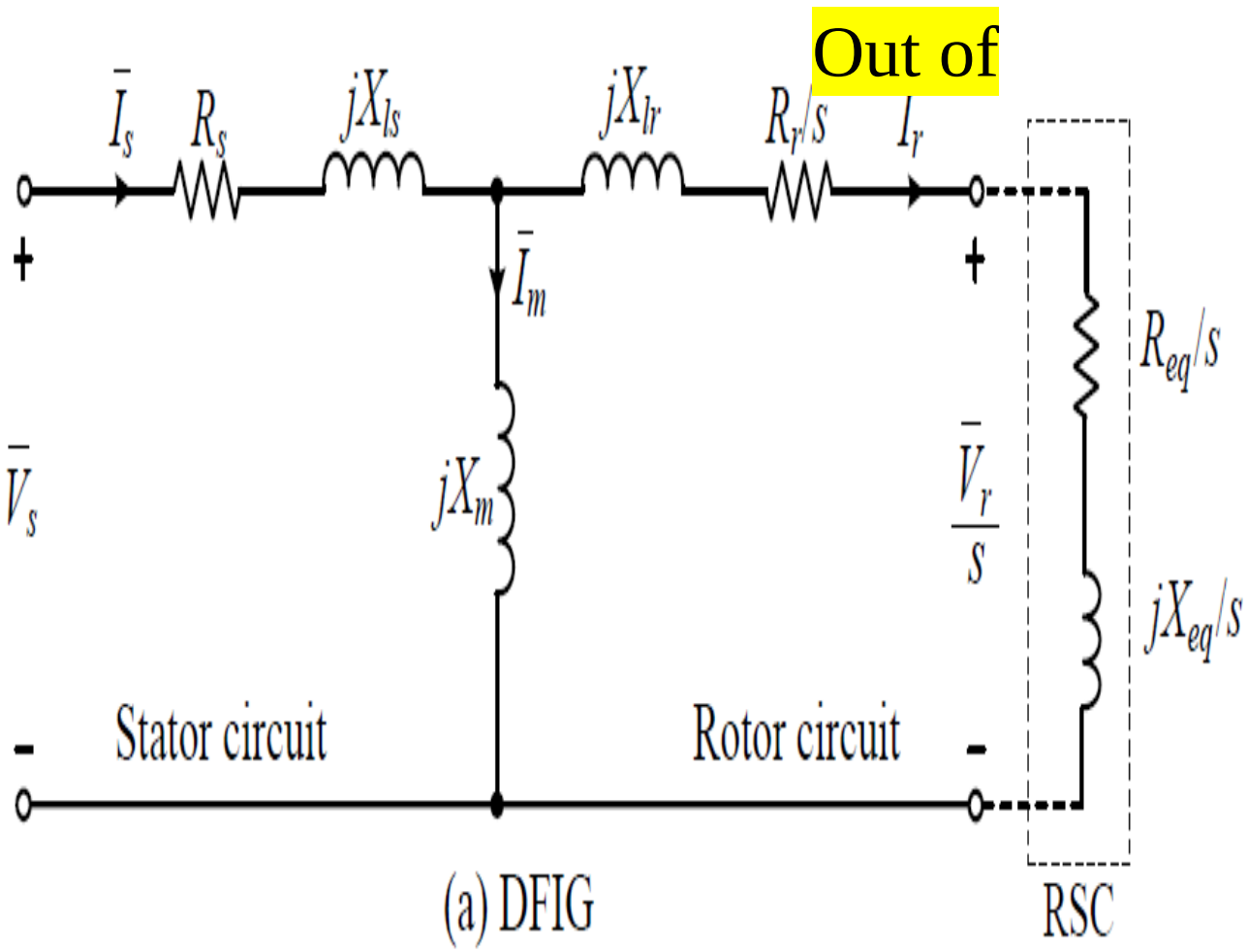

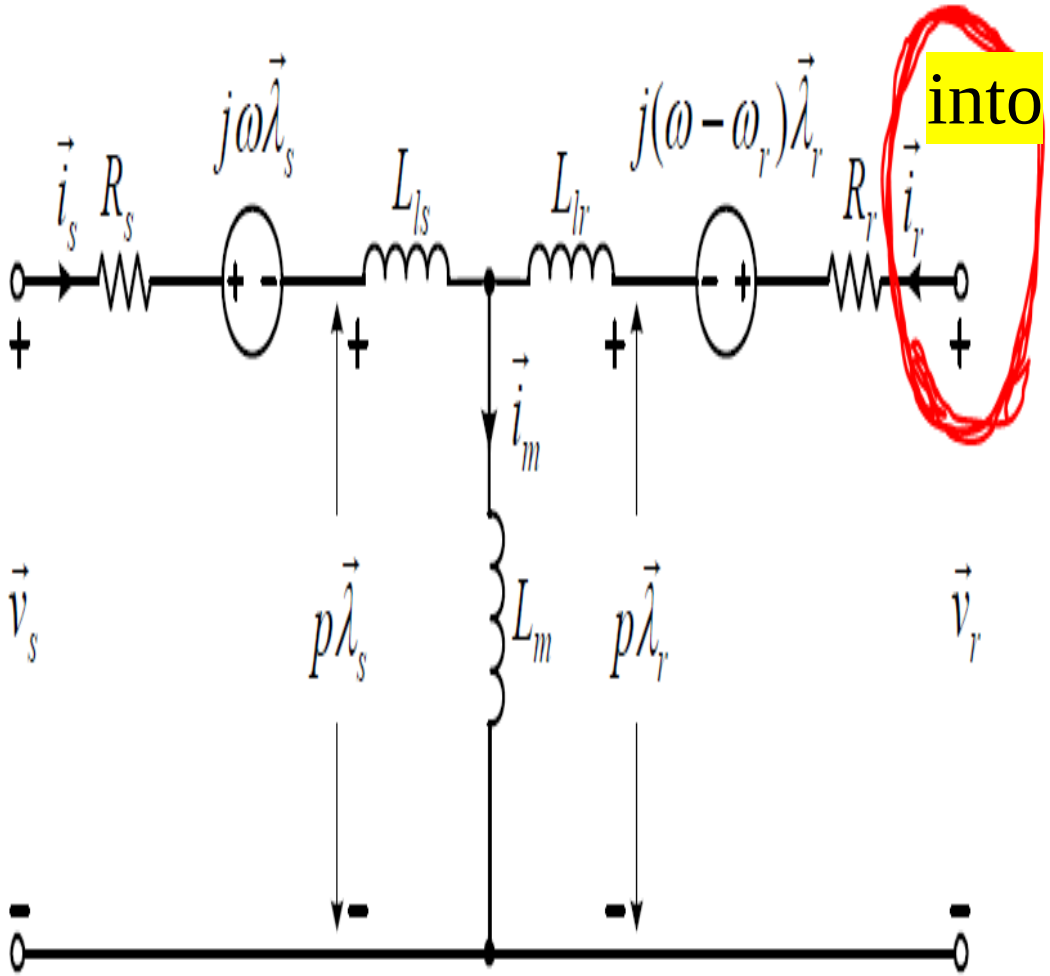

This is not compulsory but, revised rotor current direction is consistent with conventional steady-state equivalent circuit of induction machine.

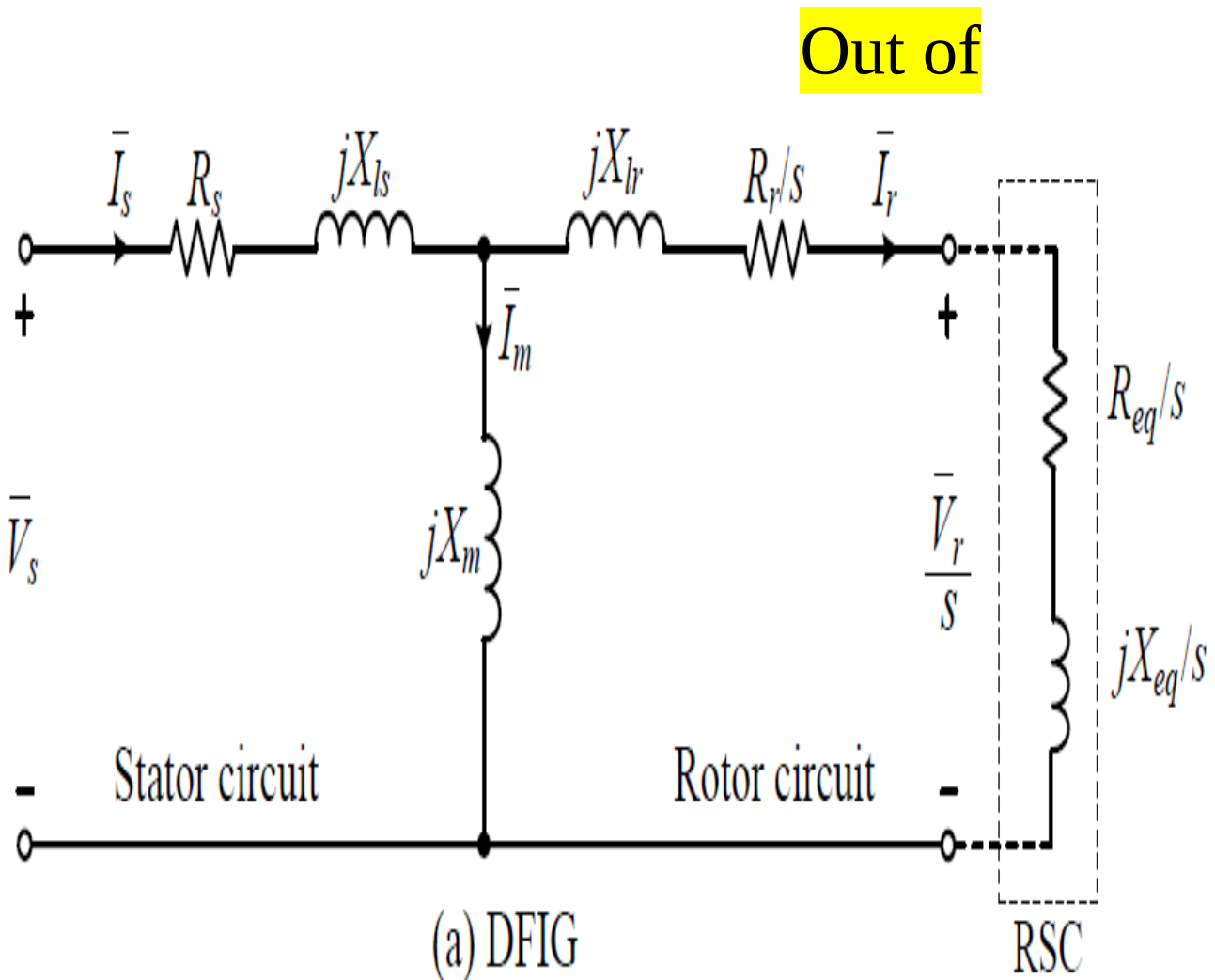

(a) DFIG

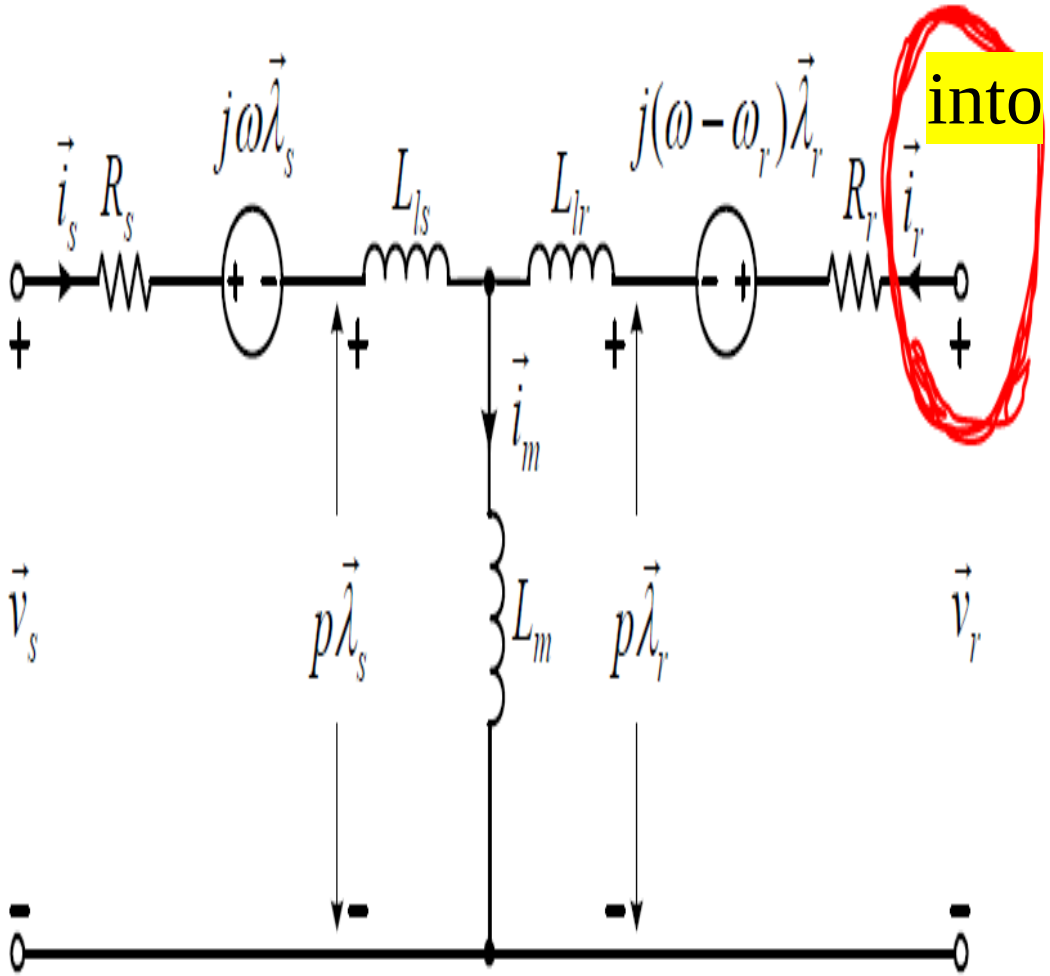

Applied all changes then equations for steady-state analysis of induction generator:

$$\begin{cases} \vec{v}_s = R_s \vec{i}_s + j\omega\vec{\lambda}_s \\ \vec{v}_r = R_r \vec{i}_r + j(\omega - \omega_r) \end{cases}$$

- where uppercase letters with a bar on top represent phasors.

$$\begin{cases} \overline{V}_s = R_s \overline{I}_s + j\omega_s \overline{\Lambda}_s \\ \overline{V}_r = -R_r \overline{I}_r + j(\omega_s - \omega_r)\overline{\Lambda}_r \end{cases}$$

- e.g, $\overline{\Lambda}_s$ and $\overline{\Lambda}_r$ are phasors for stator & rotor flux linkages λ_s and λ_r, respectively.

What element is common in these equations?

$$\begin{cases} \vec{\lambda}_s = (L_{ls} + L_m)\vec{i}_s + L_m \vec{i}_r \\ \vec{\lambda}_r = (L_{lr} + L_m)\vec{i}_r + L_m \vec{i}_s \end{cases}$$

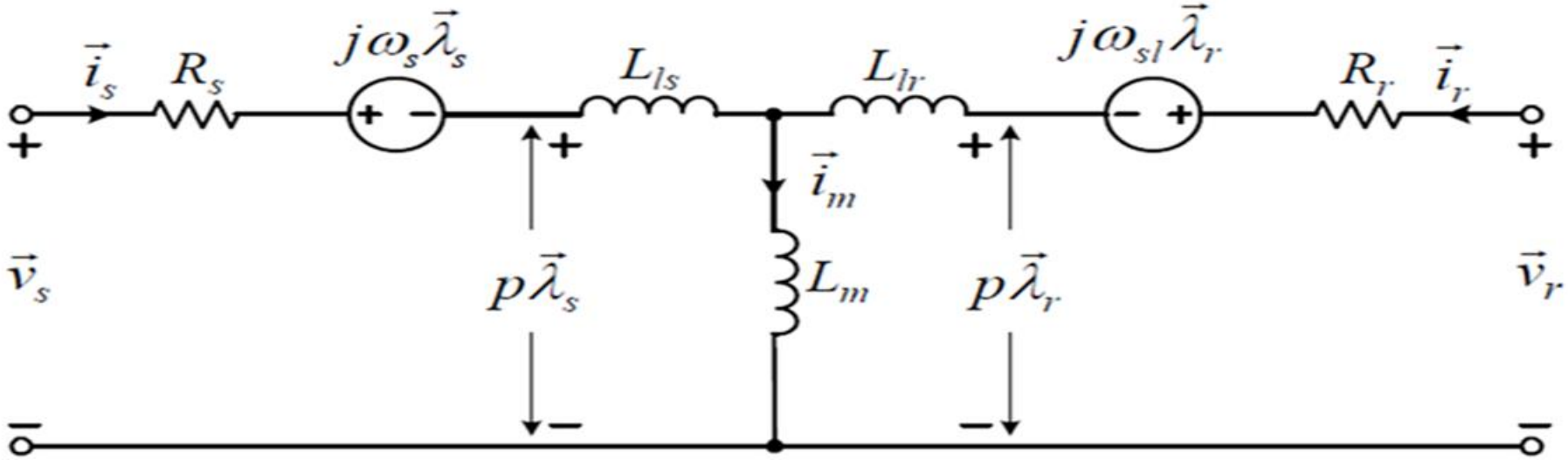

Taking common L_m

$$\begin{cases} \vec{\lambda}_s = (L_{ls} + L_m)\vec{i}_s + L_m \vec{i}_r \\ \vec{\lambda}_r = (L_{lr} + L_m)\vec{i}_r + L_m \vec{i}_s \end{cases}$$

$$\overrightarrow{\lambda_s} = L_{ls}\vec{i}_s + L_m\left(\vec{i}_s + \vec{i}_r\right)$$

And putting $\overrightarrow{i_m} = \vec{i}_s + \vec{i}_r$

$$\overrightarrow{\lambda_s} = L_{ls}\vec{i}_s + L_m\overrightarrow{i_m}$$

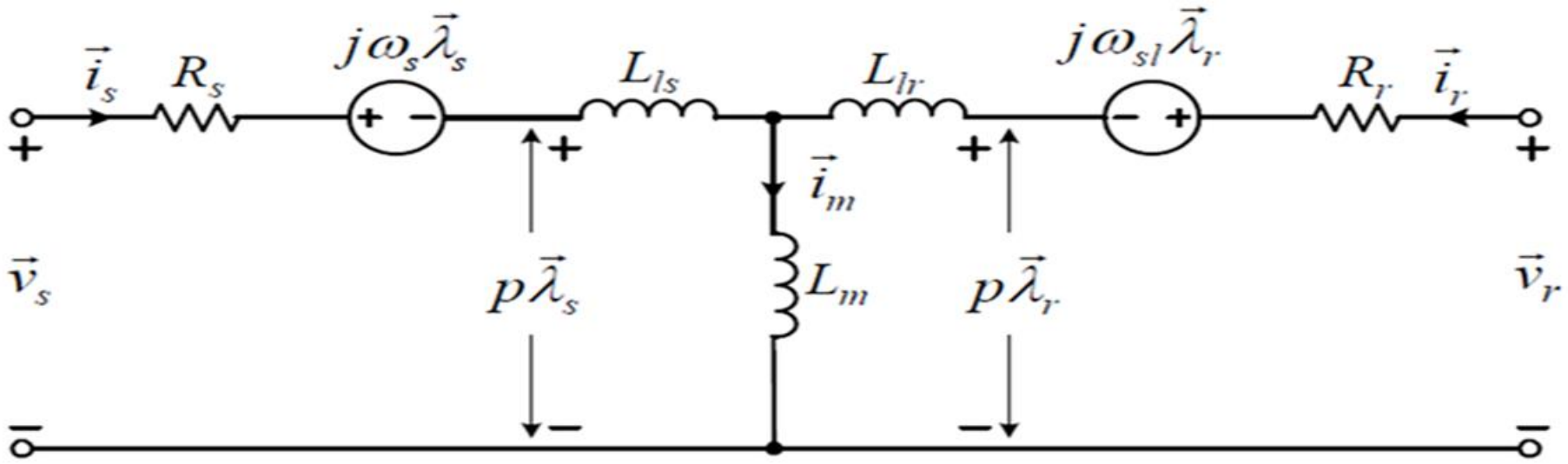

The phasors for the stator and rotor flux linkages $\overline{\Lambda}_s$ and $\overline{\Lambda}_r$

$$\vec{\lambda}_s = L_{ls}\vec{i}_s + L_m\vec{i}_m$$

$$\overline{\Lambda}_s = L_{ls}\overline{I}_s + L_m\overline{I}_m$$

$$\overline{\Lambda}_r = -L_{lr}\overline{I}_r + L_m\overline{I}_m$$

Uppercase letters with a bar on top represent phasors

By putting $\overline{\Lambda}_s$ and $\overline{\Lambda}_r$ in the following equation

$$\begin{cases} \overline{V}_s = R_s \overline{I}_s + j\omega_s \boxed{\overline{\Lambda}_s} \\ \overline{V}_r = -R_r \overline{I}_r + j(\omega_s - \omega_r) \boxed{\overline{\Lambda}_r} \end{cases}$$

$$\overline{\Lambda}_s = L_{ls} \overline{I}_s + L_m \overline{I}_m$$

$$\overline{\Lambda}_r = -L_{lr} \overline{I}_r + L_m \overline{I}_m$$

$$\begin{cases} \overline{V}_s = R_s \overline{I}_s + j\omega_s (L_{ls} \overline{I}_s + L_m \overline{I}_m) \\ \overline{V}_r = -R_r \overline{I}_r + j\omega_{sl} (-L_{lr} \overline{I}_r + L_m \overline{I}_m) \end{cases}$$

Concept of the angular slip frequency ω_{sl}

$$\begin{cases} \overline{V}_s = R_s \overline{I}_s + j\omega_s (L_{ls}\overline{I}_s + L_m \overline{I}_m) \\ \overline{V}_r = -R_r \overline{I}_r + j\omega_{sl} (-L_{lr}\overline{I}_r + L_m \overline{I}_m) \end{cases}$$

- where is the ω_{sl} is the angular slip frequency, given by

$$\omega_{sl} = \omega_s - \omega_r$$

- If we divide it by ω_s then $\dfrac{\omega_{sl}}{\omega_s} = \dfrac{\omega_s - \omega_r}{\omega_s}$

We can obtain Slip s

$$s = \frac{\omega_{sl}}{\omega_s}$$

Dividing the rotor voltage equation by slip s because $\frac{\omega_{sl}}{s} = \omega_s$

$$s = \frac{\omega_{sl}}{\omega_s}$$

$$\boxed{\overline{V}_r = -R_r \overline{I}_r + j\omega_{sl}(-L_{lr}\overline{I}_r + L_m \overline{I}_m)}$$

$$\frac{\overline{V}_r}{s} = -\frac{R_r}{s}\overline{I}_r + j\omega_s(-L_{lr}\overline{I}_r + L_m \overline{I}_m)$$

Now open the bracket $\begin{cases} \overline{V_s} = R_s \overline{I_s} + j\omega_s (L_{ls} \overline{I_s} + L_m \overline{I_m}) \\ \dfrac{\overline{V_r}}{s} = -\dfrac{R_r}{s} \overline{I_r} + j\omega_s (-L_{lr} \overline{I_r} + L_m \overline{I_m}) \end{cases}$

$$\overline{V_s} = R_s \overline{I_s} + j\omega_s L_{ls} \overline{I_s} + j\omega_s L_m \overline{I_m}$$

$$\frac{\overline{V_r}}{s} = -\frac{R_s}{s} \overline{I_r} - j\omega_s L_{lr} \overline{I_r} + j\omega_s L_m \overline{I_m}$$

X_{ls} and X_{lr} are stator & rotor leakage reactances and X_m is magnetizing reactance, given by

$$\begin{cases} X_{ls} = \omega_s L_{ls} \\ X_{lr} = \omega_s L_{lr} \\ X_m = \omega_s L_m \end{cases}$$

$$\overline{V_s} = R_s \overline{I_s} + j\omega_s L_{ls} \overline{I_s} + j\omega_s L_m \overline{I_m}$$

$$\frac{\overline{V_r}}{s} = \frac{R_s}{s} \overline{I_r} - j\omega_s L_{lr} \overline{I_r} + j\omega_s L_m \overline{I_m}$$

$$\overline{V_s} = R_s \overline{I_s} + jX_{ls} \overline{I_s} + jX_m \overline{I_m}$$

$$\frac{\overline{V_r}}{s} = \frac{-R_r}{s} \overline{I_r} - jX_{lr} \overline{I_r} + jX_m \overline{I_m}$$

Design steady-state equivalent circuit for induction generator based on derived equations?

$$\overline{V_s} = R_s \overline{I_s} + jX_{ls} \overline{I_s} + jX_m \overline{I_m}$$

$$\frac{\overline{V_r}}{s} = \frac{-R_r}{s} \overline{I_r} - jX_{lr} \overline{I_r} + jX_m \overline{I_m}$$

Steady-state equivalent circuit for induction generator

$$\overline{V_s} = R_s \overline{I_s} + jX_{ls} \overline{I_s} + jX_m \overline{I_m}$$

$$\frac{\overline{V_r}}{s} = \frac{-R_r}{s} \overline{I_r} - jX_{lr} \overline{I_r} + jX_m \overline{I_m}$$

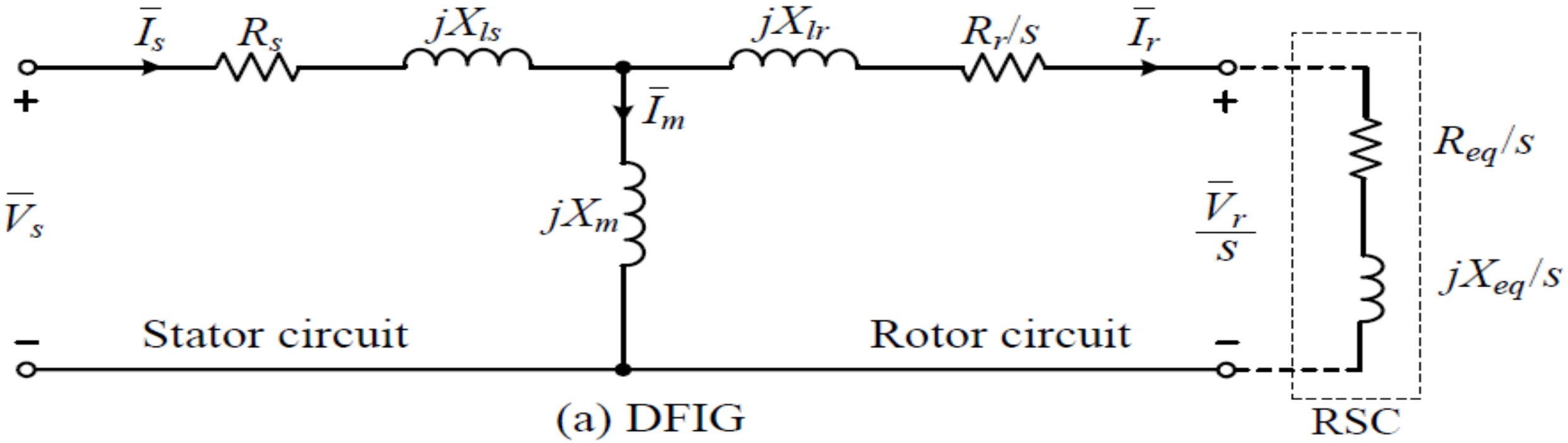

(a) DFIG

In DFIG wind energy systems, rotor circuit is normally connected to a rotor-side converter (RSC) that can be presented by an equivalent impedance.

$$\overline{V_s} = R_s \overline{I_s} + jX_{ls} \overline{I_s} + jX_m \overline{I_m}$$

$$\frac{\overline{V_r}}{s} = \frac{-R_r}{s} \overline{I_r} - jX_{lr} \overline{I_r} + jX_m \overline{I_m}$$

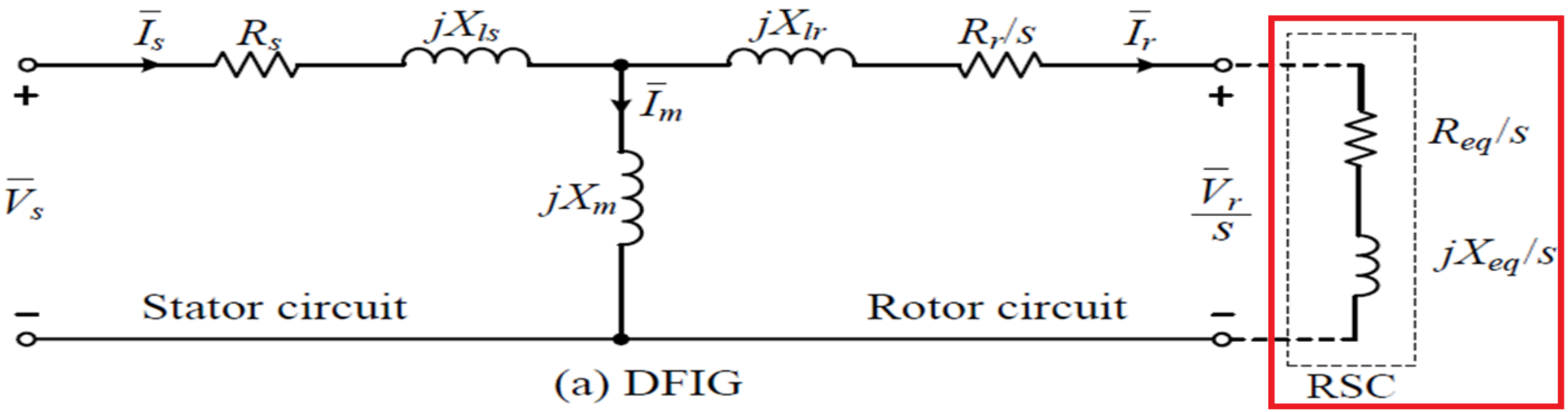

(a) DFIG

For the SCIG the rotor circuit is shorted and the rotor voltage *Vr=0* as illustrated in Fig.

$$\overline{V_s} = R_s \overline{I_s} + jX_{ls} \overline{I_s} + jX_m \overline{I_m}$$

$$\frac{\overline{V_r}}{s} = \frac{-R_r}{s} \overline{I_r} - jX_{lr} \overline{I_r} + jX_m \overline{I_m}$$

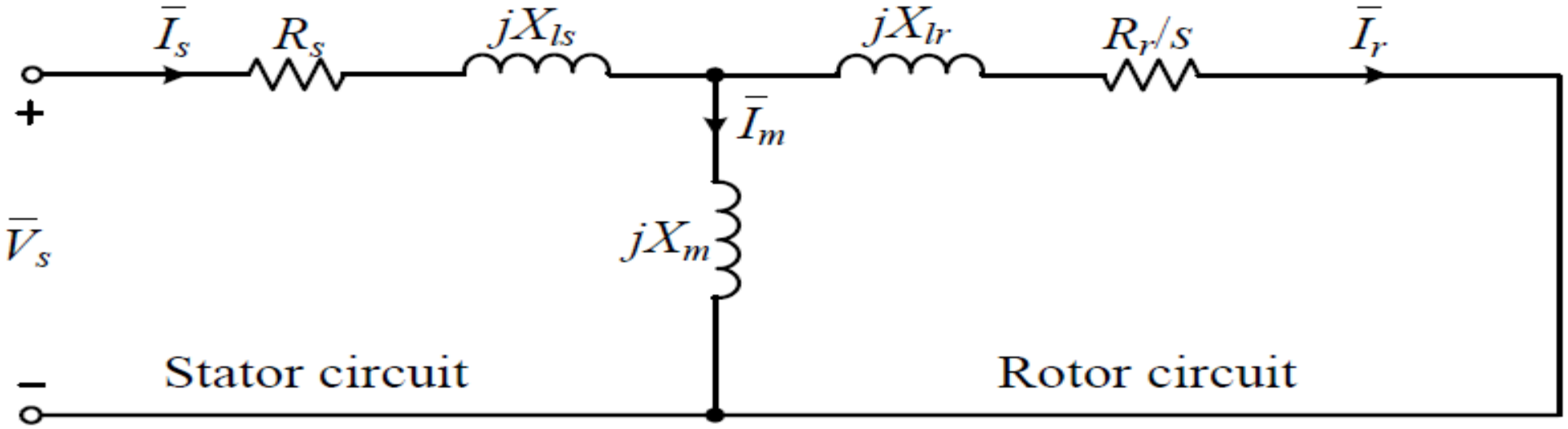

(b) SCIG

3.3.6 Steady –state Equivalent Circuit of IG

a) Power Flow

To understand power flow analysis for induction generator, rotor resistance *Rr/s* in Fig. is split into 02 components

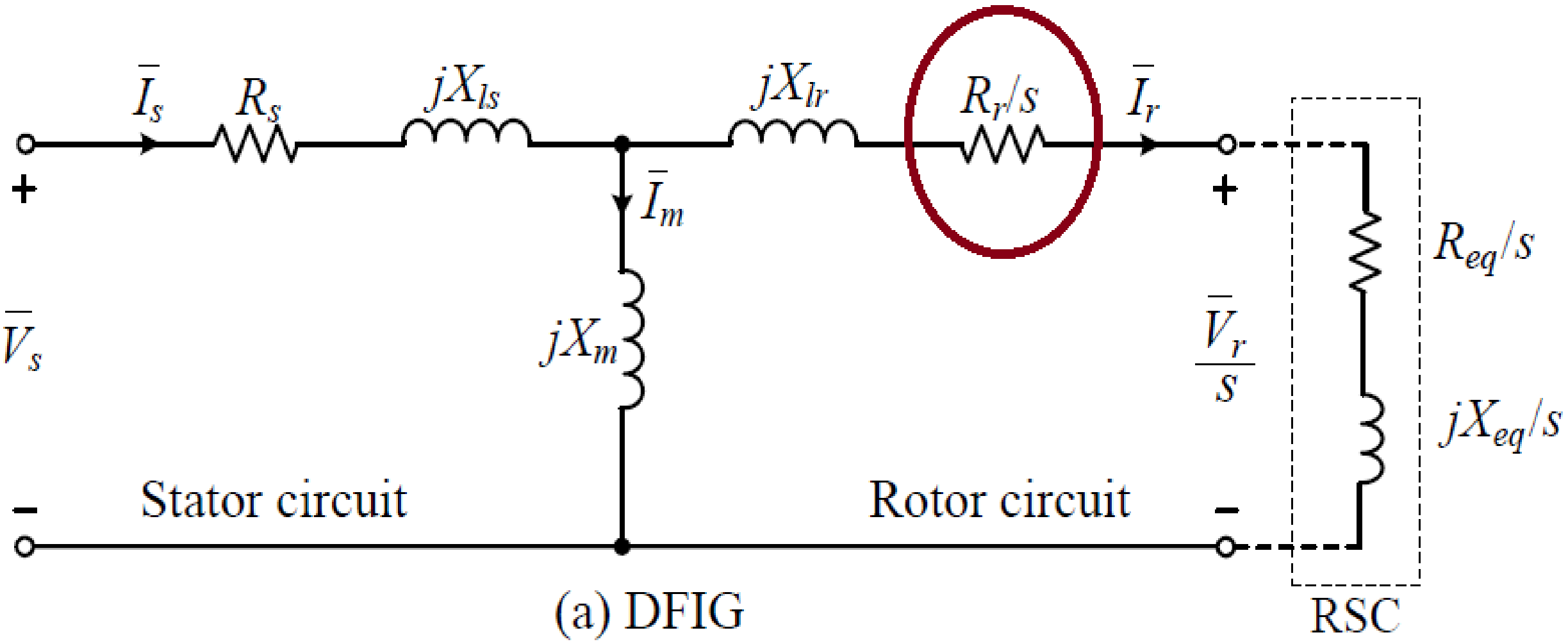

(a) DFIG

Try to split Rr/s such that **Rr/s= Rr/s**

Lets show in the form of equation Rr/s= Rr/s

Lets add both side ***Rotor resistance*** *Rr*

(Rr +Rr/s)= (Rr/s+ Rr)

Or *Rr/s= (Rr/s-Rr)+Rr*

Taking common Rr *Rr/s= Rr(1/s-1)+Rr*

By re-arranging *Rr/s= Rr +Rr(1/s-1)*

Or ***Rr/s= Rr +Rr(1-s)/s***

Resultant steady-state equivalent circuit for SCIG with

$$\frac{R_r}{s} = R_r + \frac{1-s}{s} R_r$$

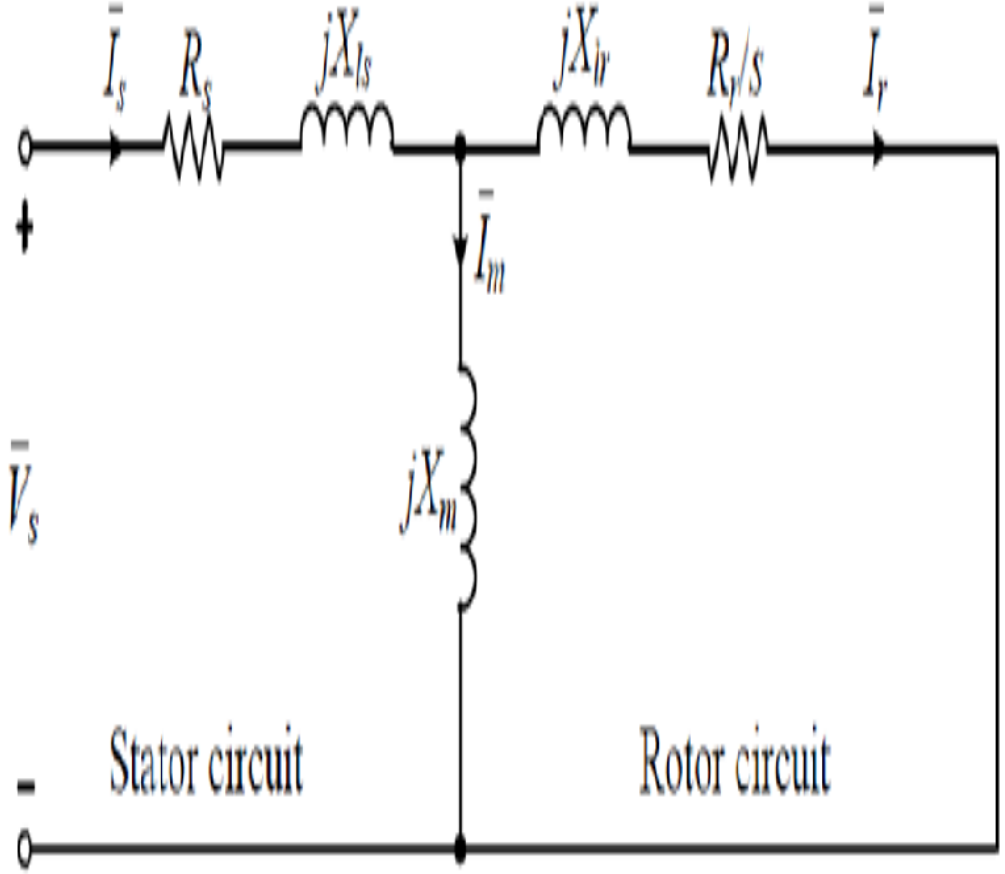

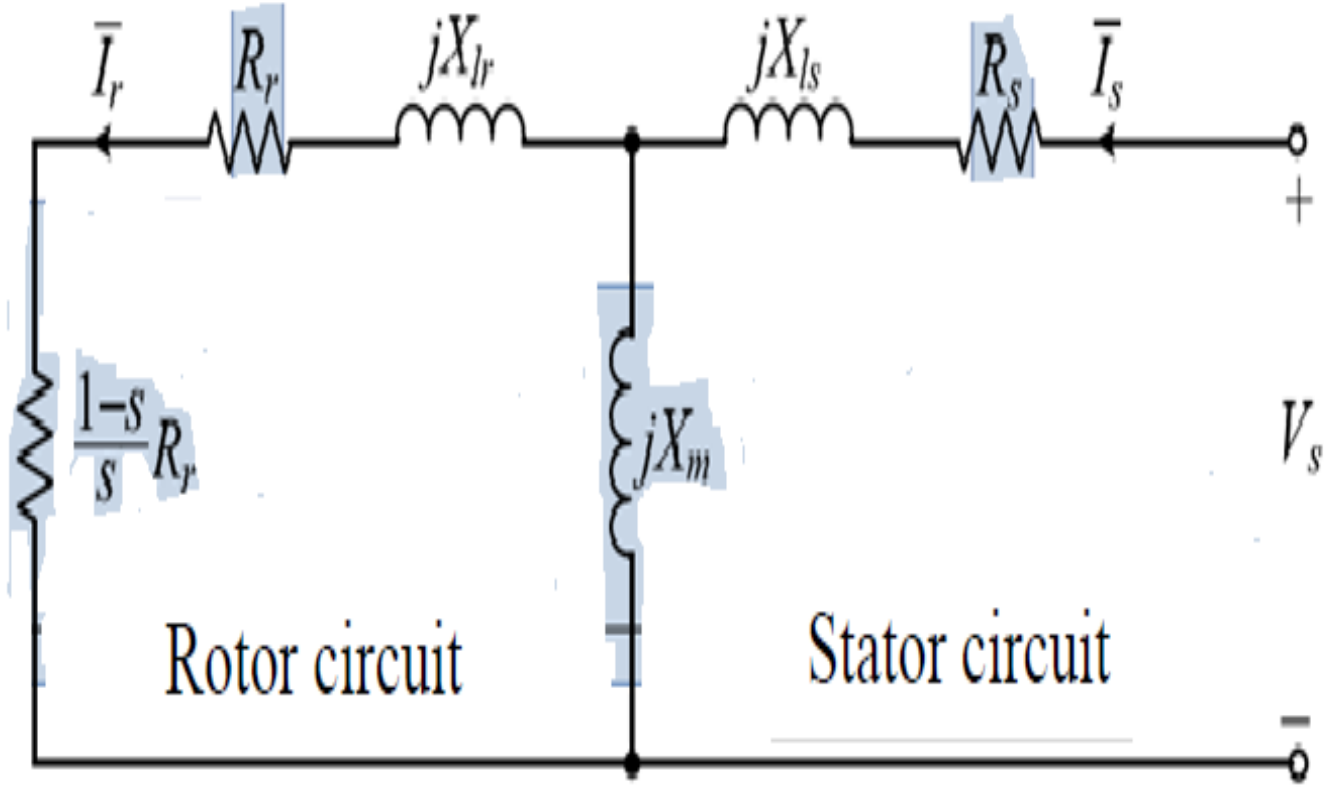

Pin is total input power produced by wind turbine

Prot is total rotational losses of mechanical system (power losses of gearbox neglected for simplicity).

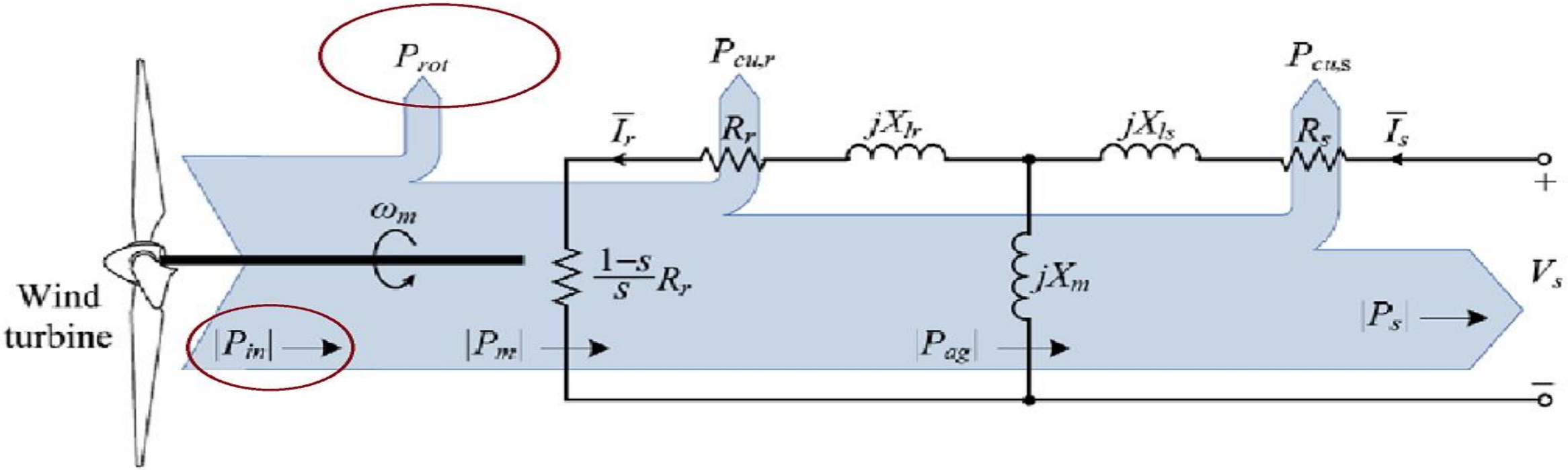

Mechanical power P_m from generator shaft can be calculated by:

$$P_m = 3I_r^2 \frac{(1-s)}{s} R_r$$

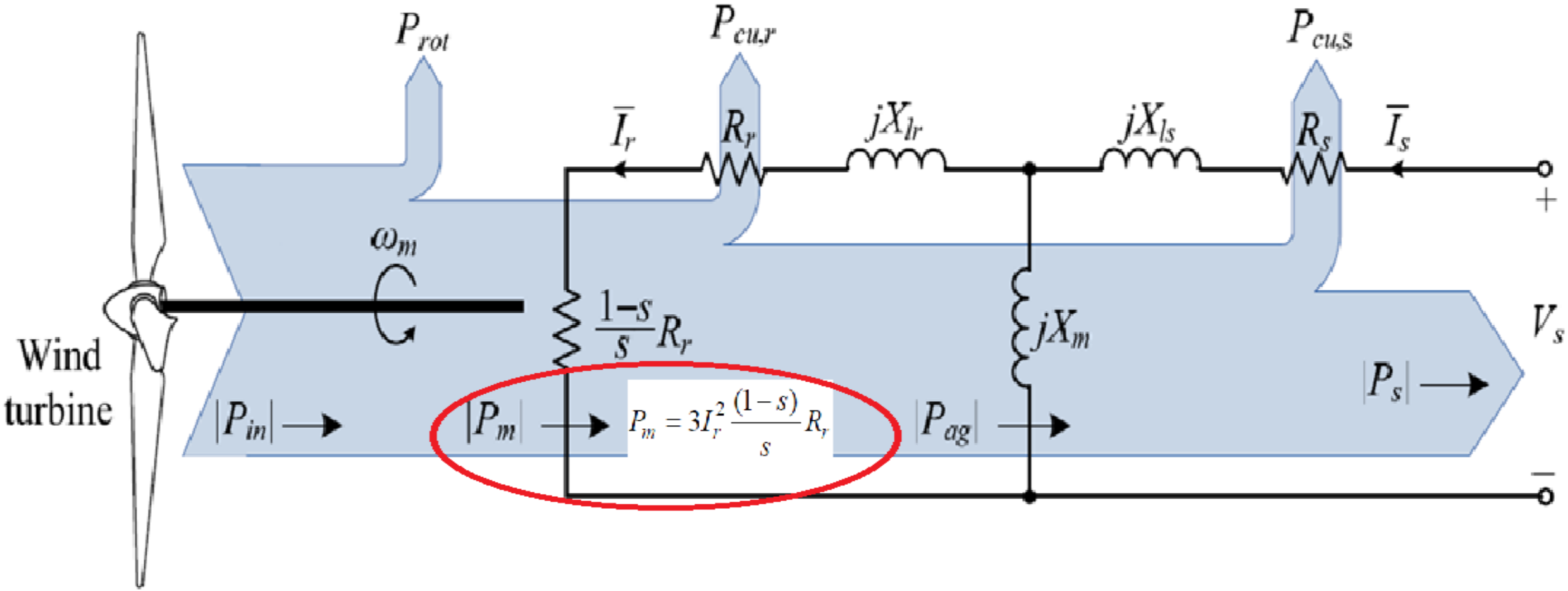

Copper losses of rotor $P_{cu,r}$ & stator windings are $P_{cu,s}$

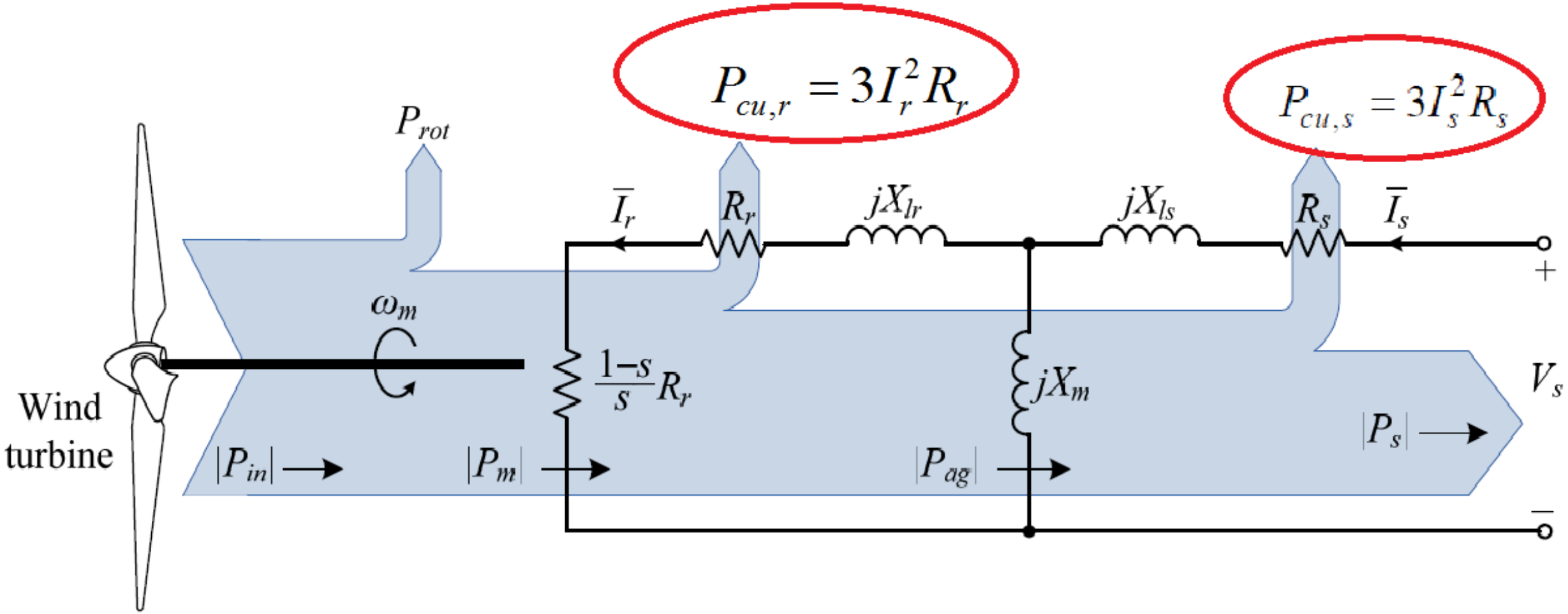

Mechanical power *P*m from generator shaft=Stator & Rotor Copper losses +Stator output power Ps i.e

$$|P_m| = |P_s| + P_{cu,r} + P_{cu,s}$$

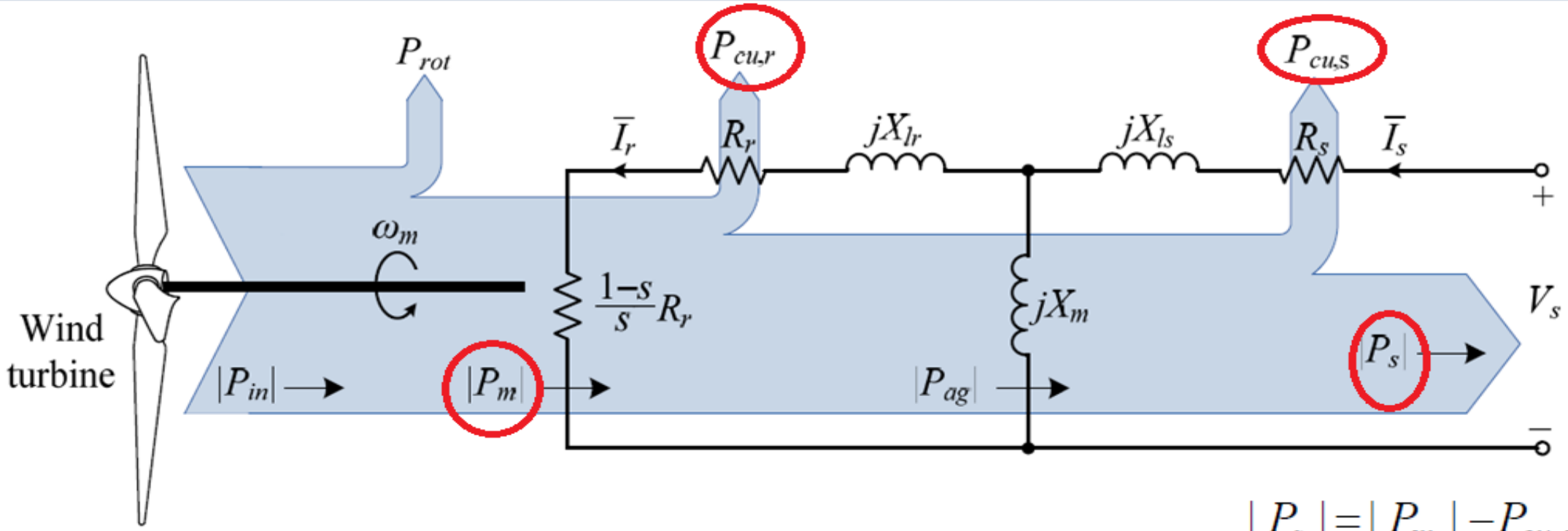

$$|P_s| = |P_m| - P_{cu,r} - P_{cu,s}$$

Absolute values are used to avoid confusion since stator power & mechanical power are -ve when IG operates in generating mode.

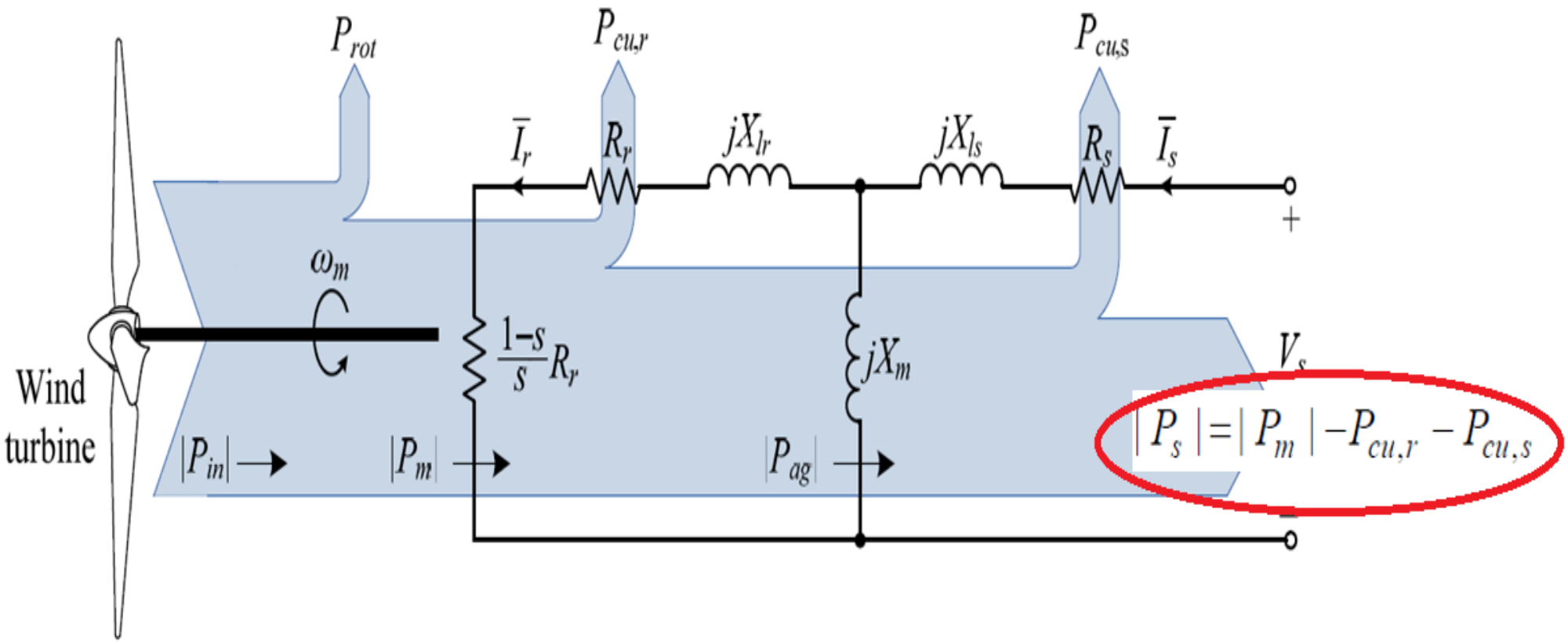

Stator power can also be calculated by $P_s = 3V_s I_s \cos\varphi_s$

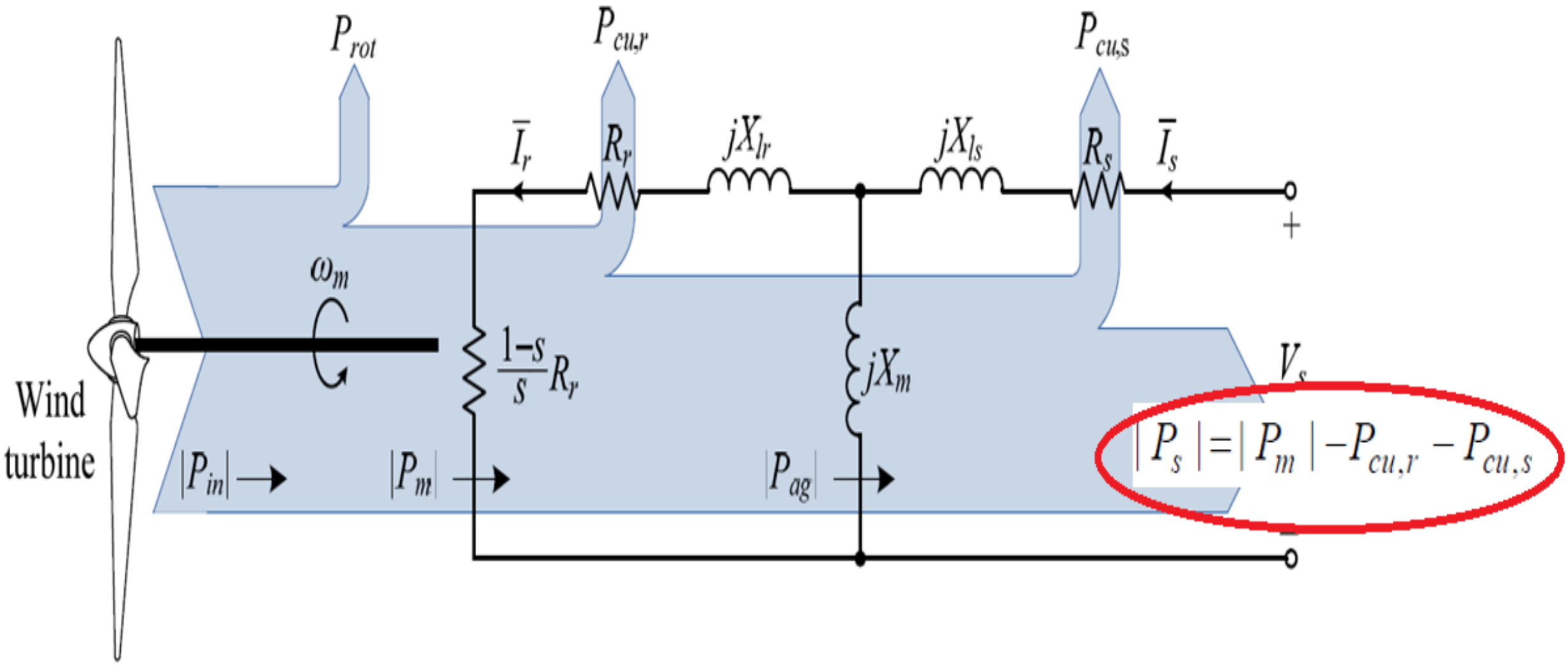

$$P_s = 3V_s I_s \cos\varphi_s$$

where φ_s is stator power factor angle,

which is phase displacement between stator voltage & current, defined by

$$\varphi_s = \angle\overline{V}_s - \angle\overline{I}_s$$

b) Generator Torque-Speed Characteristics

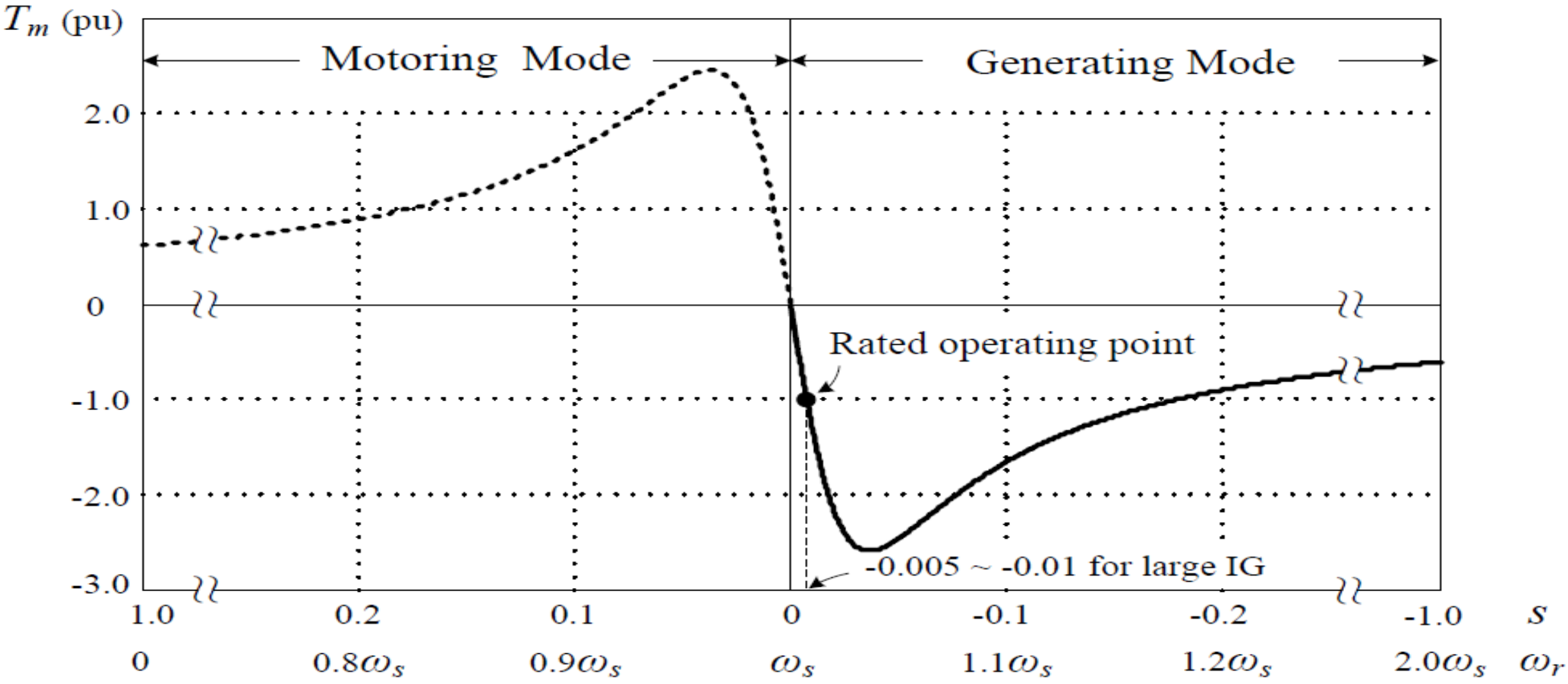

Torque-speed curve provides insight on how torque developed by generator varies with speed for a given stator voltage & frequency.

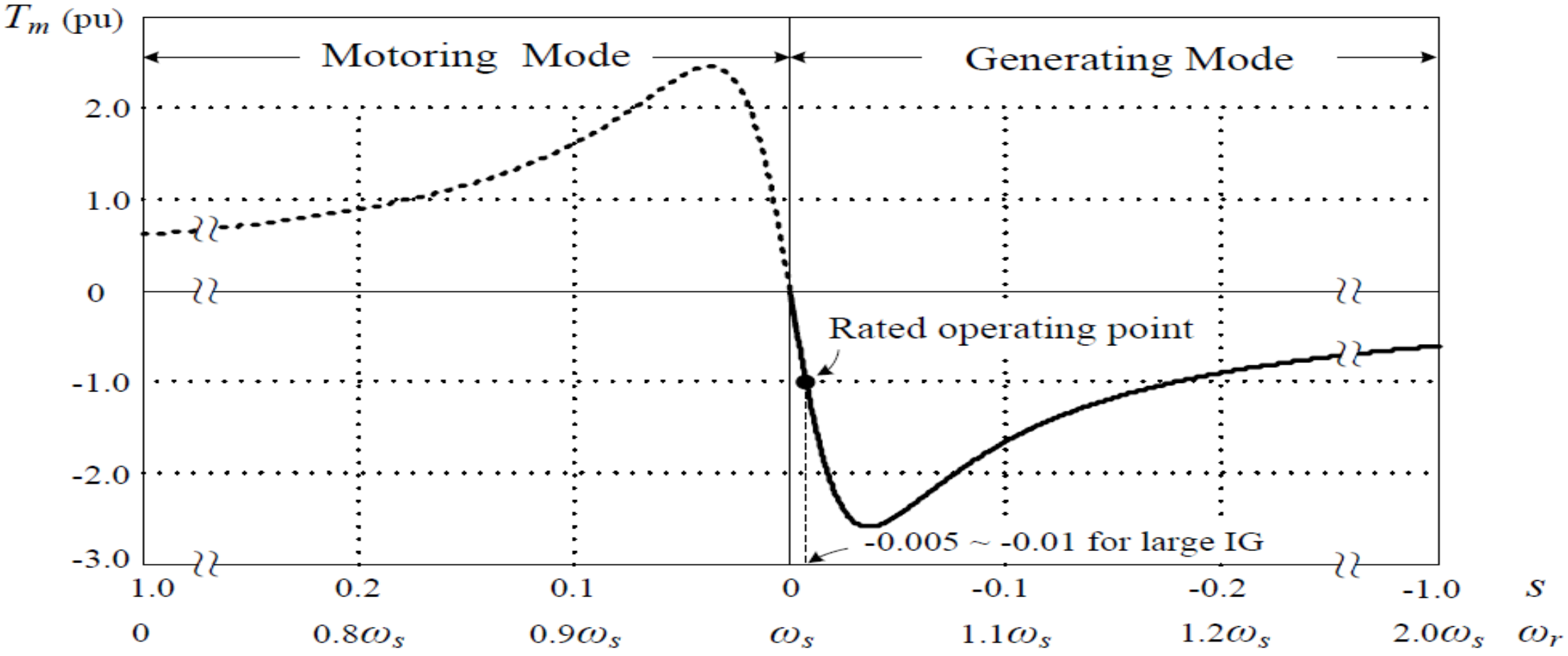

In order to obtain torque-speed curve, it is necessary to find an equation relating these variables.

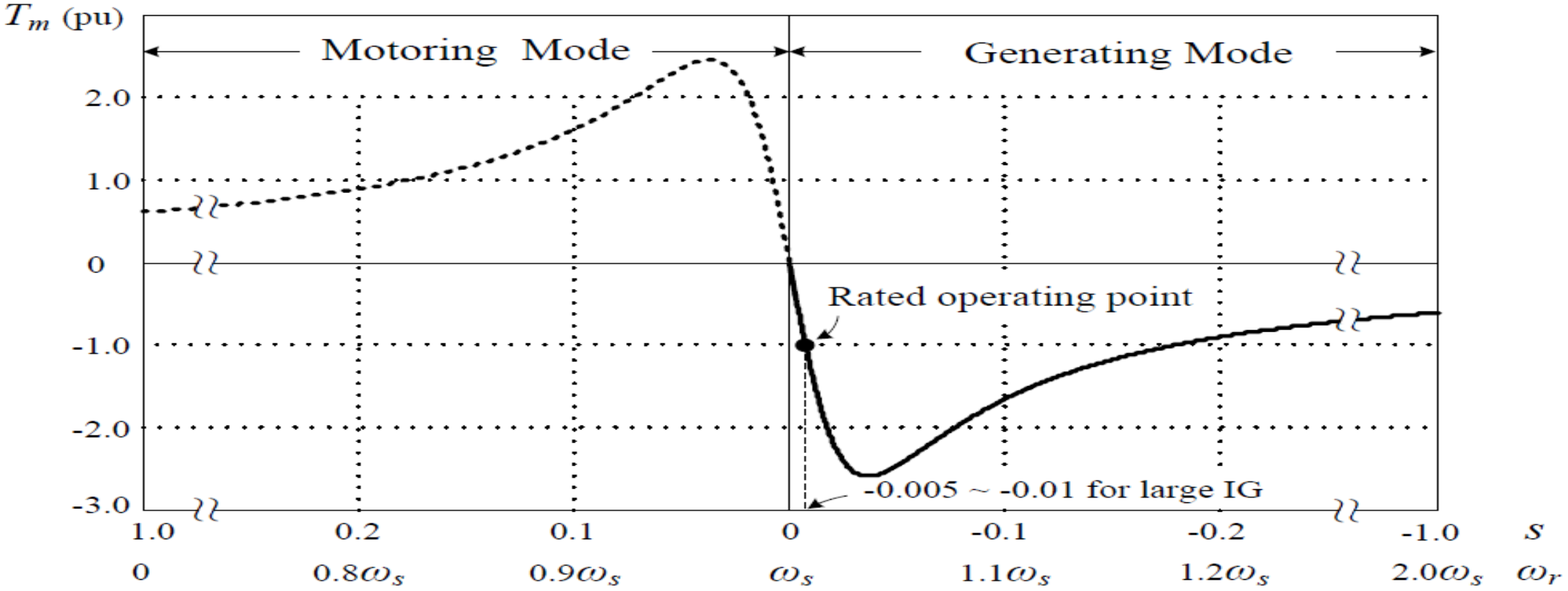

Mechanical power *P*m from generator shaft

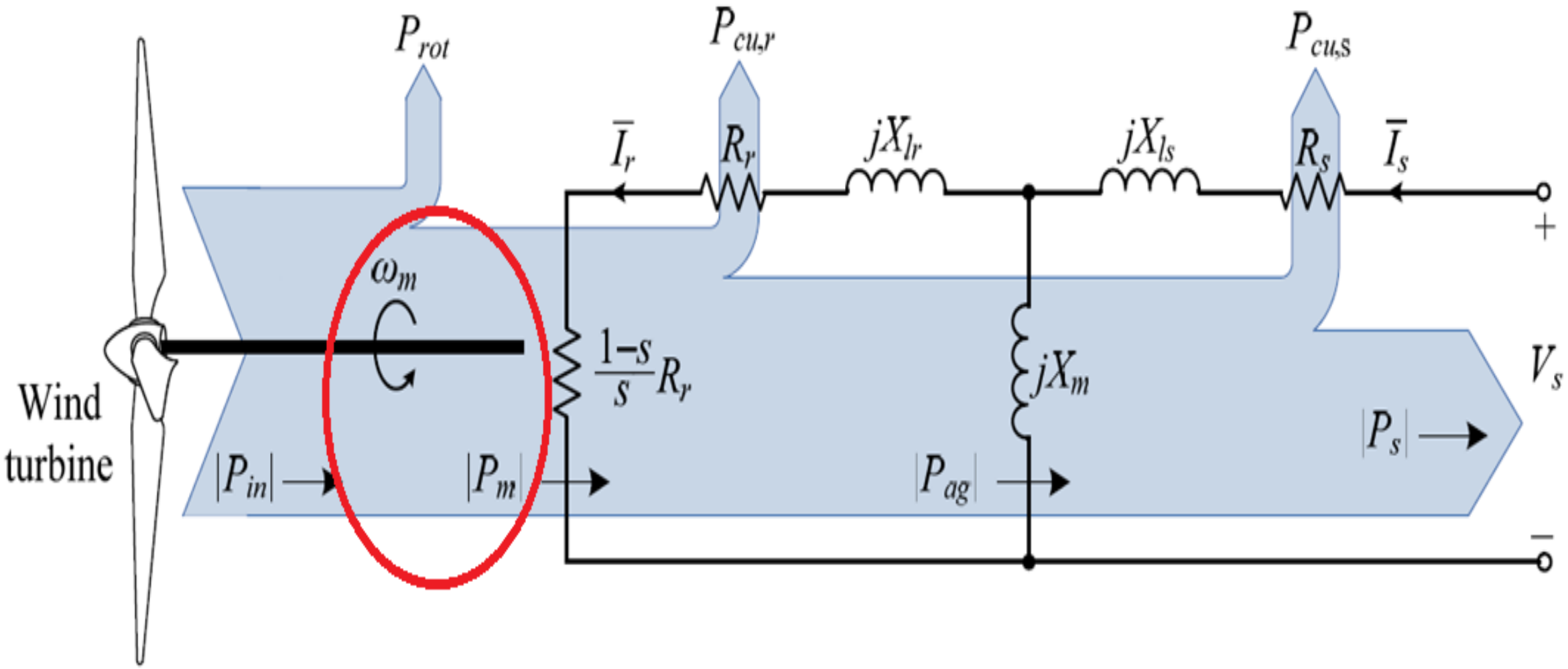

Mechanical power P_m from generator shaft is product of mechanical torque from generator shaft T_m with Rotor mechanical angular speed ω_m given by $P_m = T_m \omega_m$

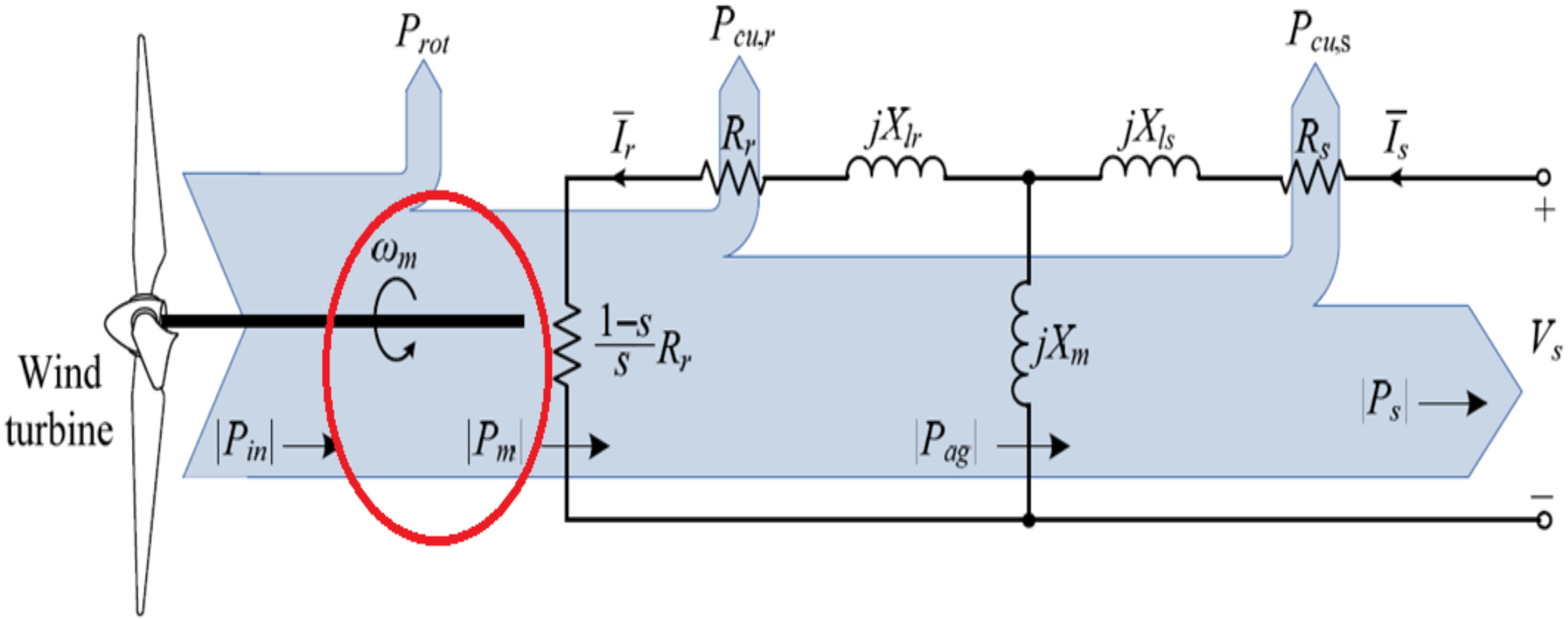

As we have already calculated mechanical power *P*m from generator shaft

$$P_m = 3I_r^2 \frac{(1-s)}{s} R_r$$

- So substitute it into

$$P_m = T_m \omega_m$$

- We obtained mechanical torque Tm

$$T_m = \frac{1}{\omega_m}\left(3I_r^2 \frac{1-s}{s} R_r\right)$$

What is the formula for rotor mechanical angular speed ω_m =?

Rotor electrical angular speed ωr divided by number of poles P given by:

$$\omega m = \frac{\omega r}{P}$$

After substituting $\omega m = \frac{\omega r}{P}$ mechanical torque Tm

$$T_m = \frac{1}{\omega_m}\left(3I_r^2 \frac{1-s}{s} R_r\right):$$

$$T_m = \frac{1}{\omega_r / P}\left(3I_r^2 \frac{1-s}{s} R_r\right)$$

As we know that slip s is ratio of Angular slip frequency ω_{sl} & Stator angular frequency ω_s Viz.

$$s = \frac{\omega_{sl}}{\omega_s} = \frac{\omega_s - \omega_r}{\omega_s}$$

$$s = 1 - \frac{\omega_r}{\omega_s}$$

$$\frac{\omega_r}{\omega_s} = 1 - s$$

Substitute $\frac{\omega_r}{\omega_s} = 1 - s$ in the following eqn.

$$T_m = \frac{1}{\omega_r / P}\left(3 I_r^2 \frac{1-s}{s} R_r\right)$$

$$T_m = \frac{1}{\cancel{\omega_r} / P}\left(3 I_r^2 \frac{\cancel{\omega_r}}{\omega_s} \frac{R_r}{s}\right)$$

Air gap power is given by

$$P_{ag} = 3I_r^2 \frac{R_r}{s}$$

$$T_m = \frac{1}{\cancel{\omega_r} / P}\left(3I_r^2 \frac{\cancel{\omega_r}}{\omega_s}\frac{R_r}{s}\right)$$

$$T_m = \frac{P_{ag}}{\omega_s / P}$$

In air gap power equation rotor current, Ir is unknown?

$$P_{ag} = 3I_r^2 \frac{R_r}{s}$$

- Neglecting magnetizing branch in Fig. **for simplicity,** the rotor current I_r^2 can be calculated:

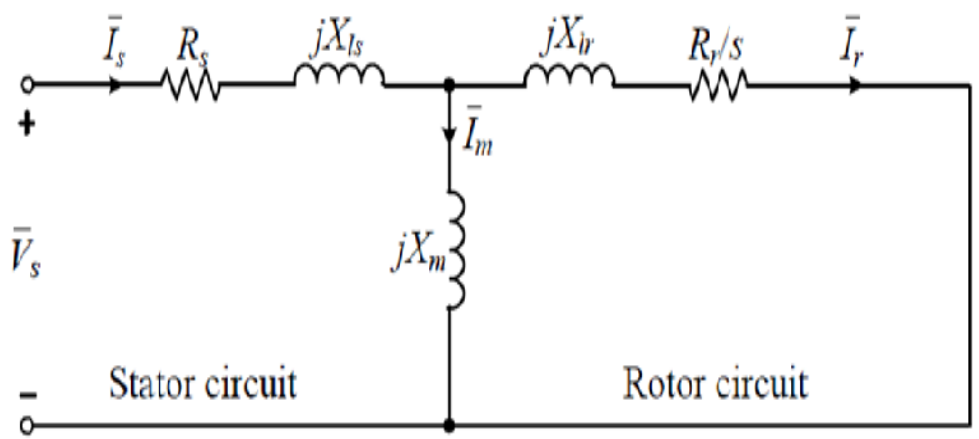

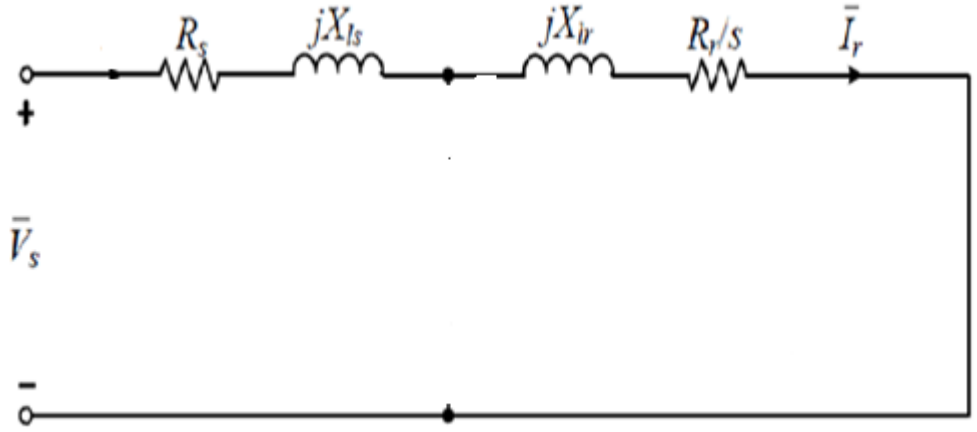

Lets calculate I_r^2

$$\overline{I}_r = \frac{\overline{V}_s}{(R_s + \frac{R_r}{s}) + j(X_{ls} + X_{lr})}$$

$$I_r^2 = \frac{V_r^2}{(R_s + \frac{R_r}{s})^2 + (X_{ls} + X_{lr})^2}$$

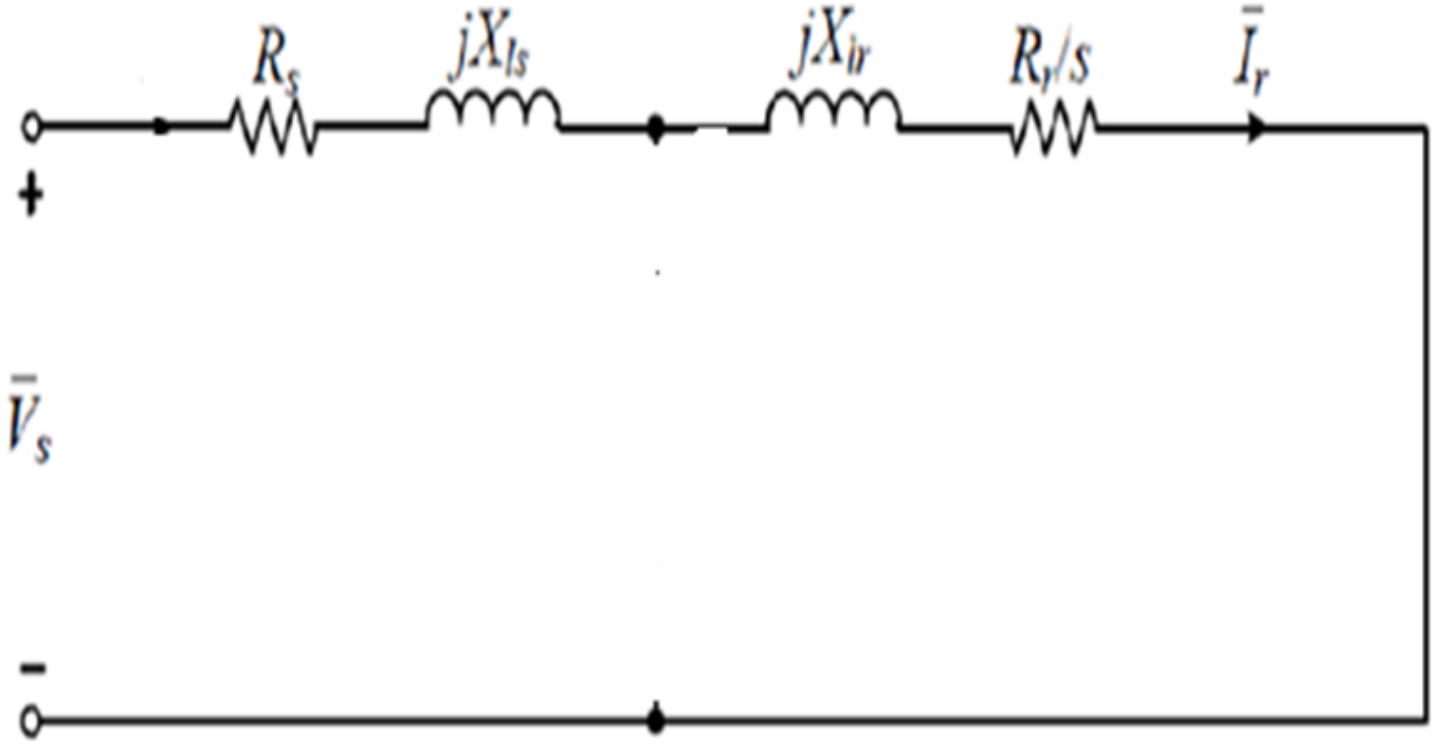

Put $$I_r^2 = \frac{V_r^2}{(R_s + \frac{R_r}{s})^2 + (X_{ls} + X_{lr})^2}$$ in $$P_{ag} = 3I_r^2 \frac{R_r}{s}$$

Finally substitute Pag in $$T_m = \frac{P_{ag}}{\omega_s / P}$$

yield $$T_m = \frac{3P}{\omega_s} \cdot \frac{R_r}{s} \cdot \frac{V_s^2}{\left(R_s + \frac{R_r}{s}\right)^2 + (X_{ls} + X_{lr})^2}$$

Equation relates mechanical torque *Tm* with slip *s* for a given stator voltage *Vs* & stator frequency *ωs*

$$T_m = \frac{3P}{\omega_s} \cdot \frac{R_r}{s} \cdot \frac{V_s^2}{\left(R_s + \frac{R_r}{s}\right)^2 + \left(X_{ls} + X_{lr}\right)^2}$$

Typical torque-slip curve of squirrel cage induction generator

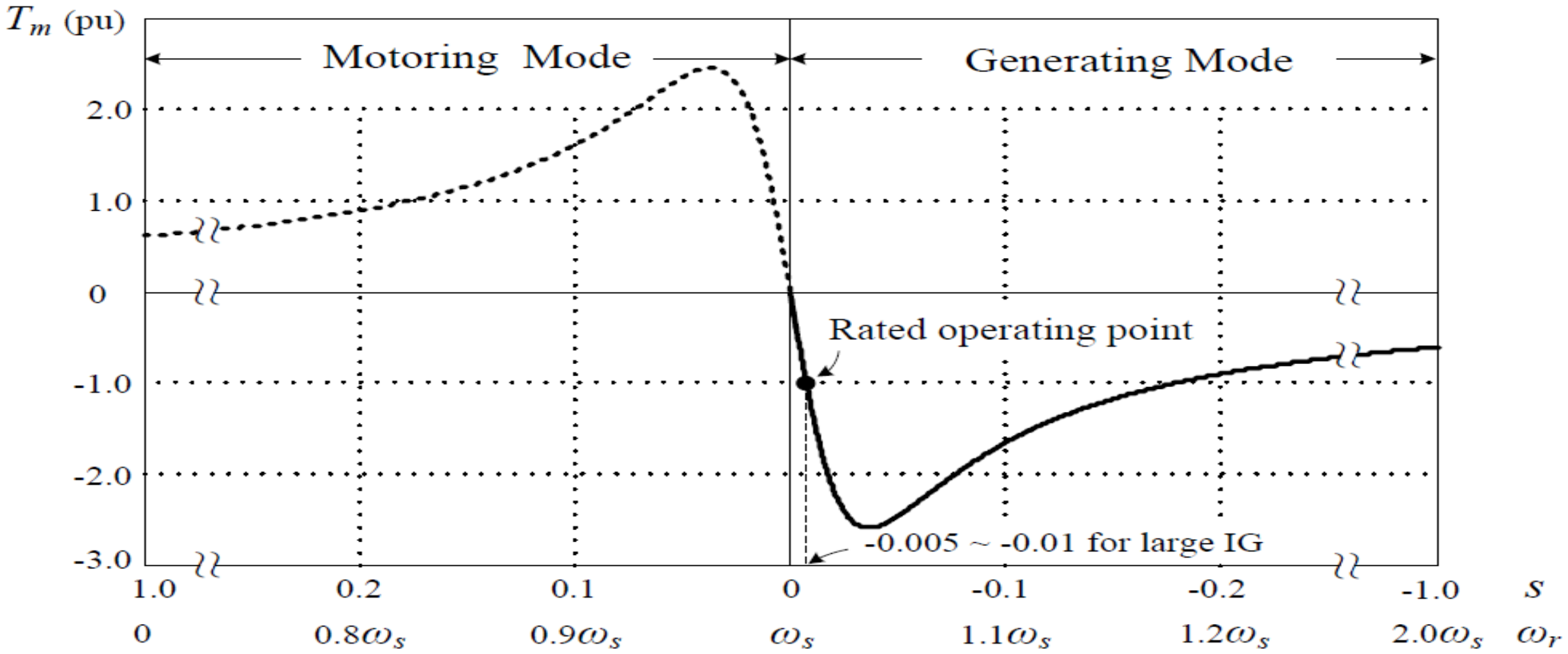

Case#01 When generator operates in motoring mode

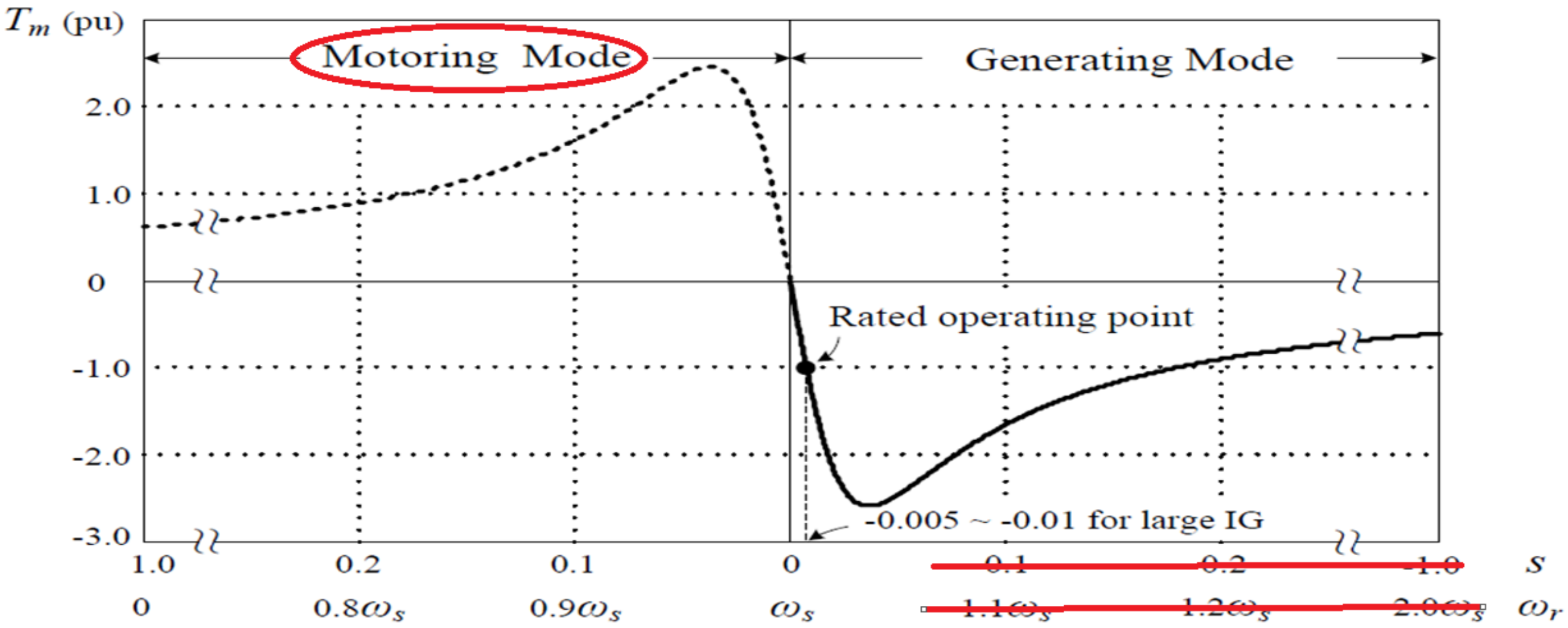

$\omega r < \omega s[0.9\omega s, 0.8\omega s \ldots 0]$ & both mechanical torque Tm & slip(0,0.1,0.2,0) are +ve ($Tm > 0$, $s > 0$).

$$s = \frac{\omega_{sl}}{\omega_s} = \frac{\omega_s - \omega_r}{\omega_s}$$

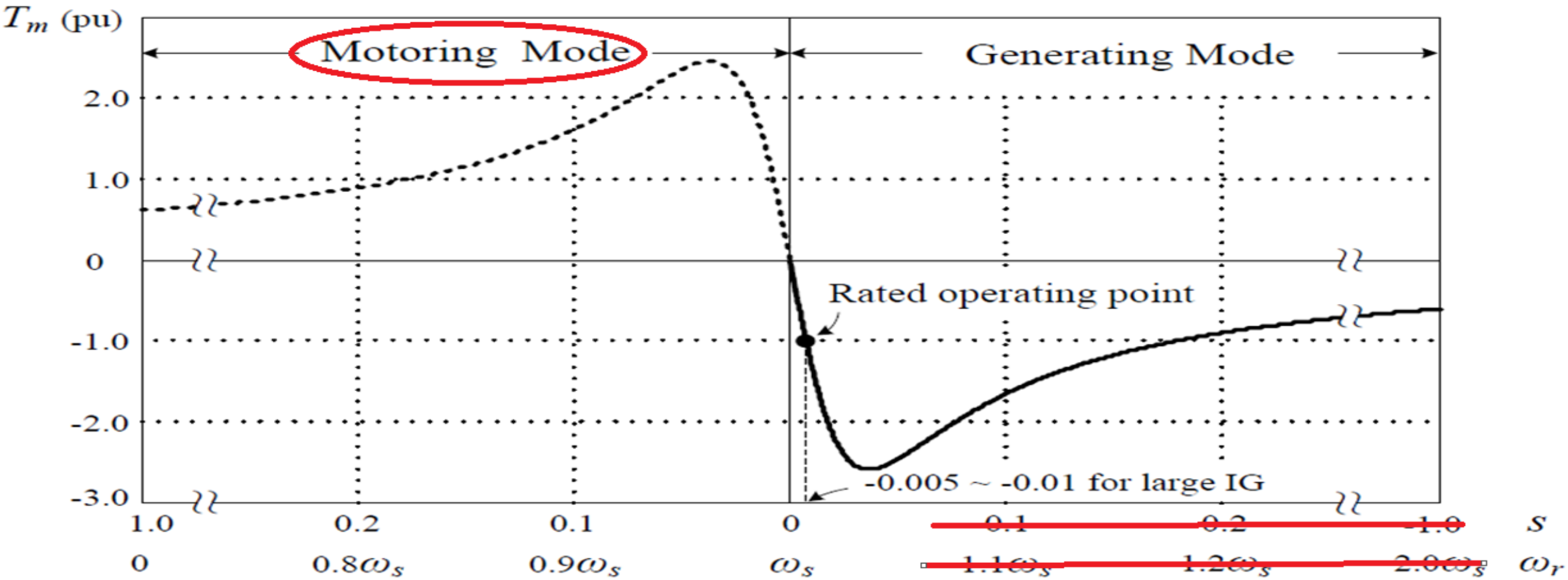

Case#02 When generator operates in generating mode

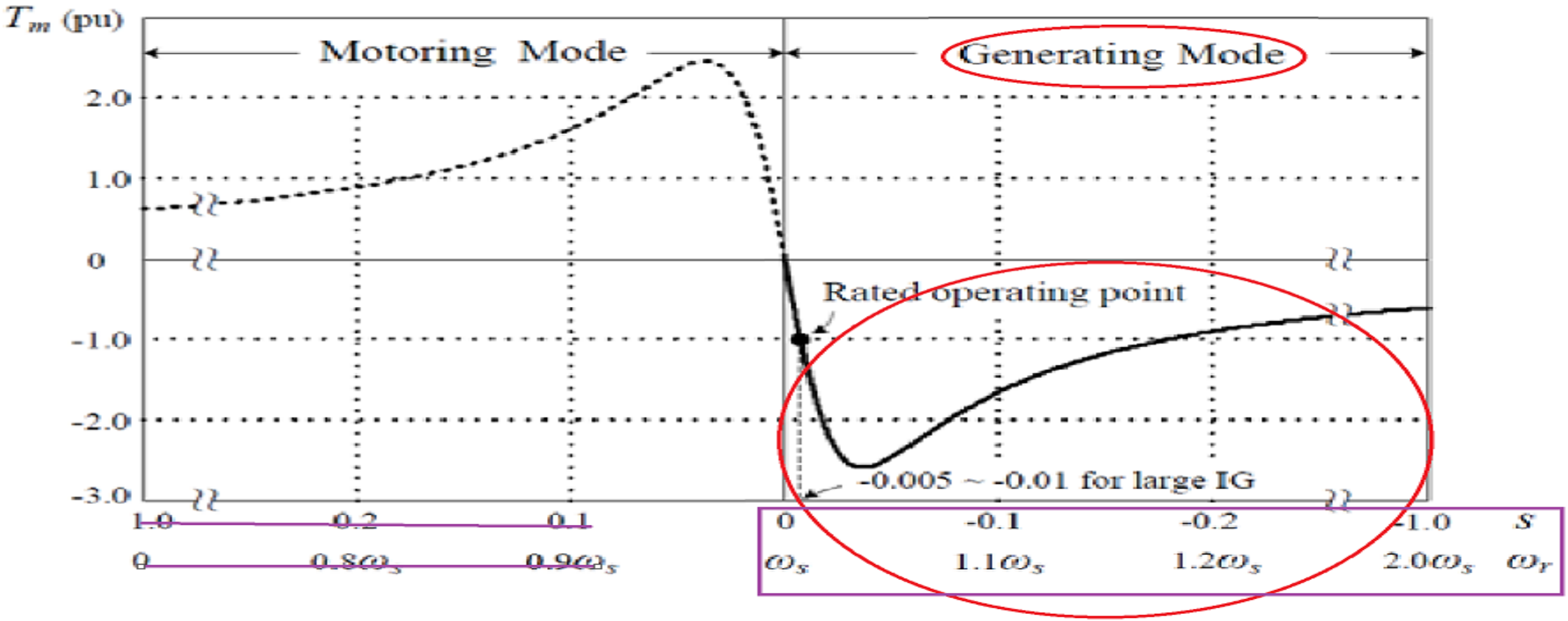

($\omega r > \omega s$) $\omega r[\omega s, 1.1\omega s, 1.2\omega s, 2.0\omega s]$ both torque & slip[-0.1,-0.2,-1.0] are -ve (Tm < 0, s < 0). $s = \frac{\omega_{sl}}{\omega_s} = \frac{\omega_s - \omega_r}{\omega_s}$

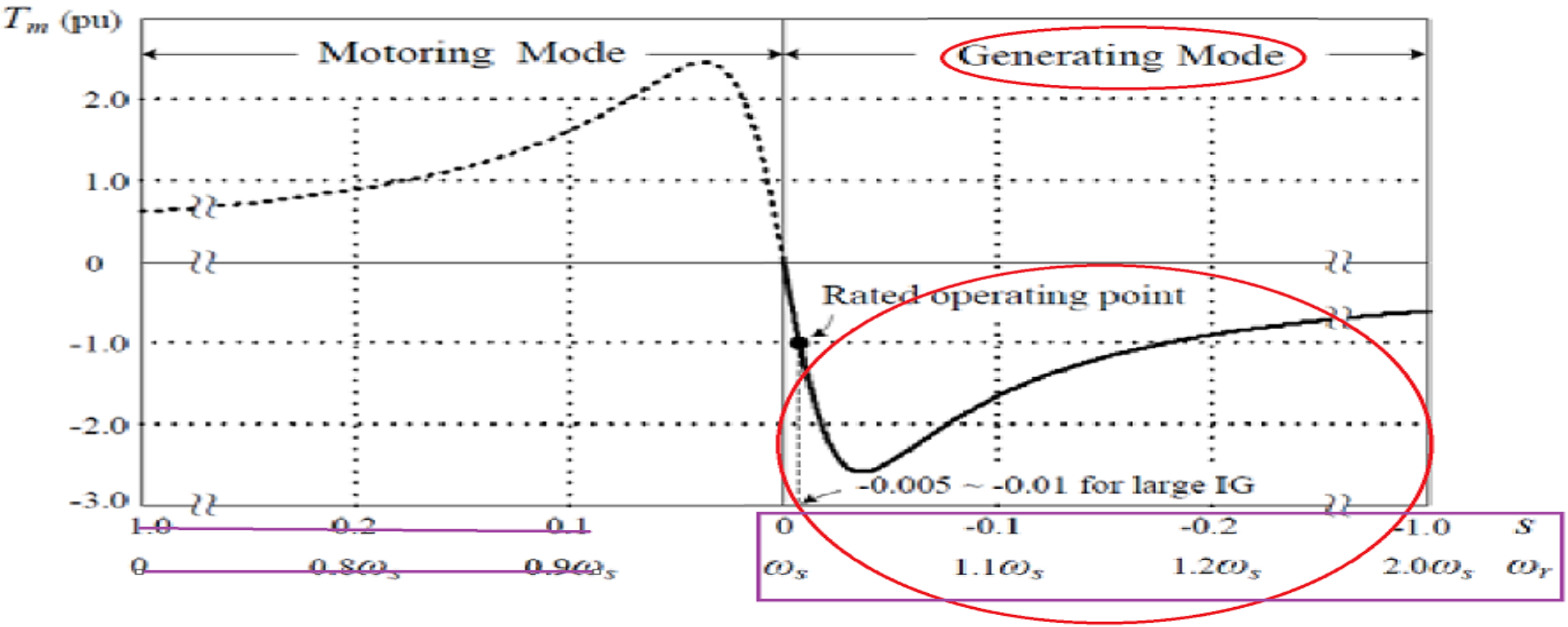

When generator operates at rated operating point, its rated mechanical torque is -1.0 pu

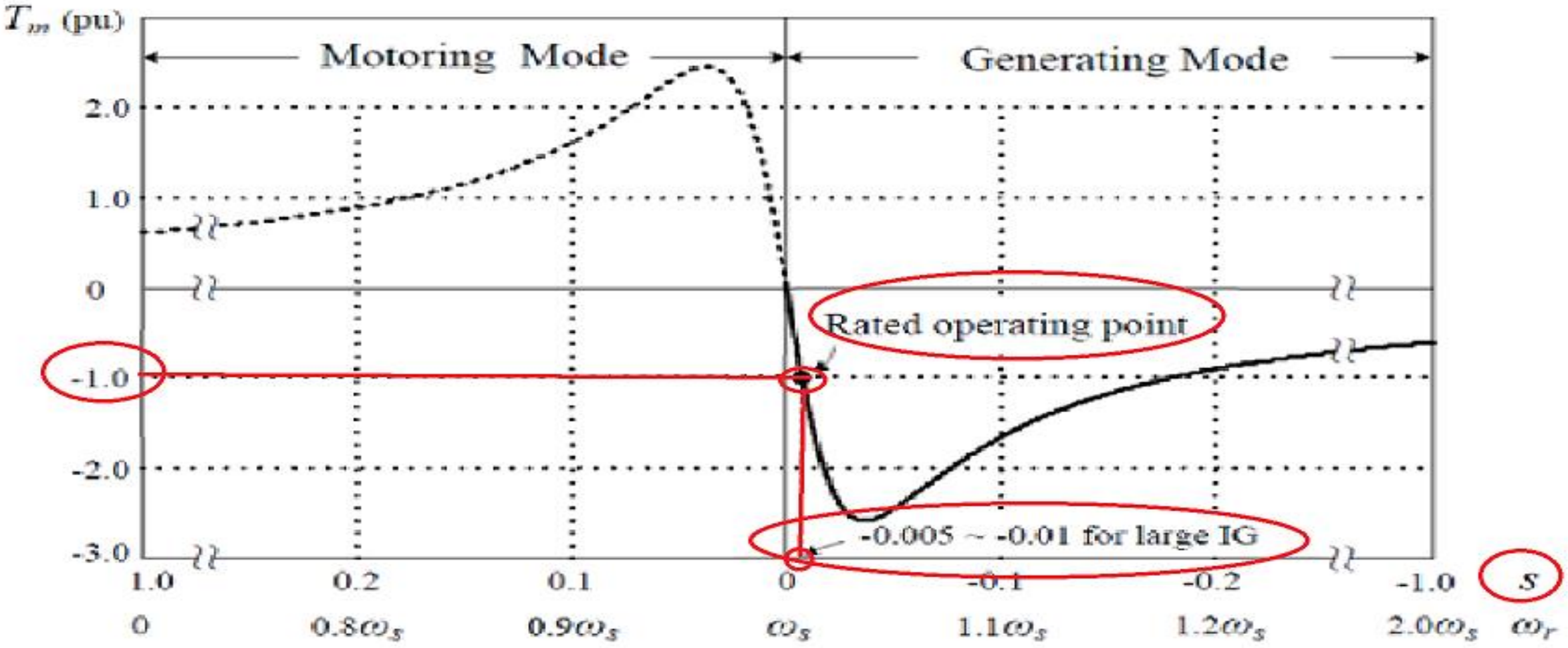
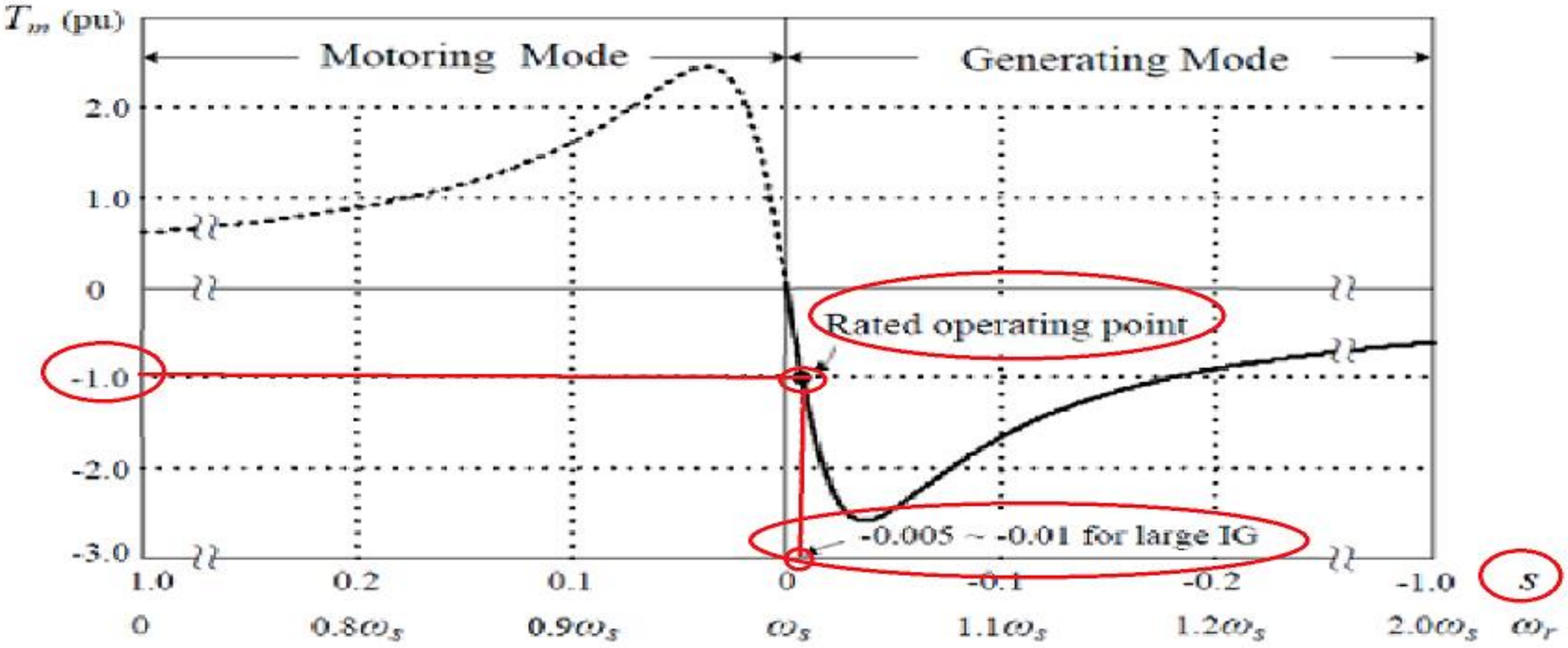
Rated slip is in range of **-0.005 to -0.01** for large MW induction generators in wind energy systems.