Wind Energy Conversion Systems Assignment # 2

M.Shamaas

2018-MS-EE-4

SCIG d-, q- and 0-axis Circuit Diagrams

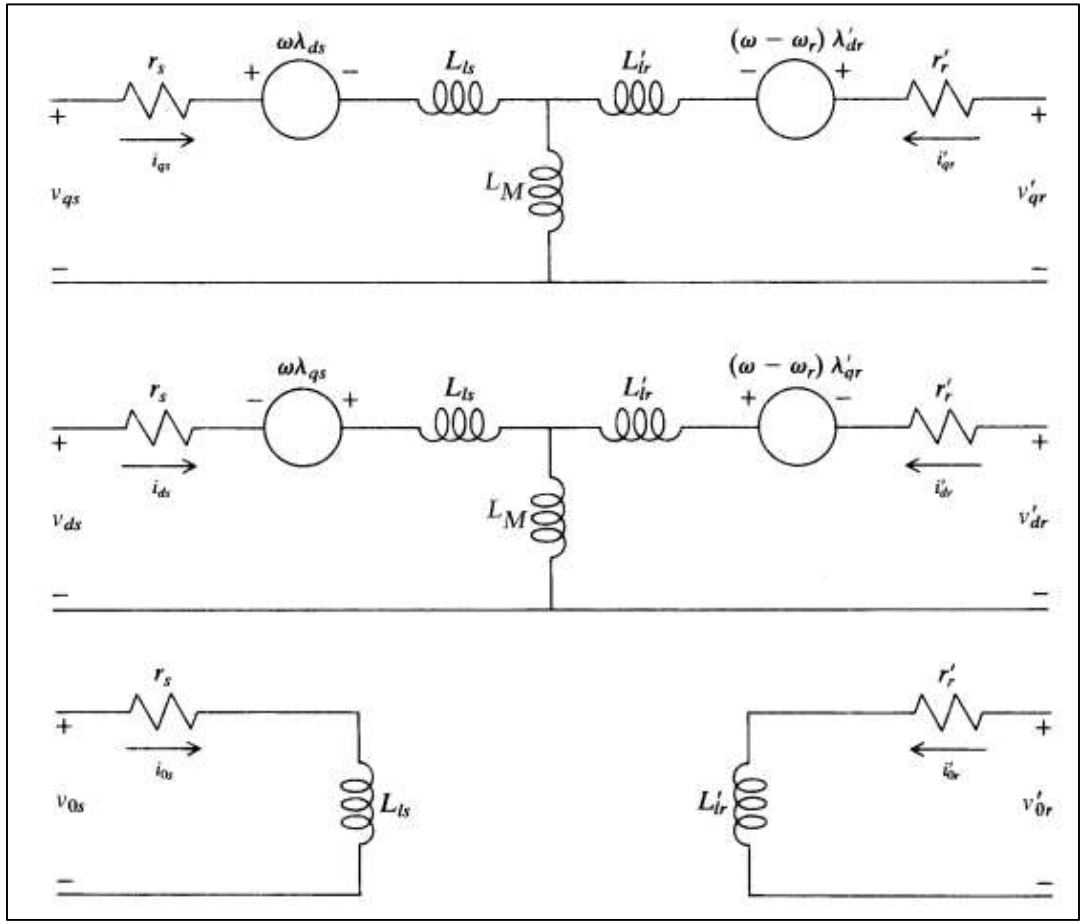

Free acceleration of a singly excited SCIG

Given Machine Constants

- $V_{rated,LL} = 220\ V(rms)$
- $P = 6$
- $f_e = 60\ Hz$
- $R_s = 0.0453\ p.u.$
- $R_r = 0.0222\ p.u.$
- $X_{ls} = 0.0775\ p.u.$
- $X_{lr} = 0.0322\ p.u.$
- $X_m = 2.042\ p.u.$
- $H = 0.5\ s$

Calculated Machine Constants

- $X_s = X_{ls} + X_m = 2.1195\ p.u.$
- $X_r = X_{lr} + X_m = 2.0742\ p.u.$
- $\omega_b = 2\pi f_e = 376.99\ rad/s$
- $\omega_s = \frac{2}{P} 2\pi f_e = 125.66\ rad/s$

Initial Conditions (t = 0-)

1. The reference frame speed

$$\omega = \omega_s$$

2. Electrical Frequency

$$f_e = 60\ Hz$$

3. Rotor Speed

$$\omega_r = 0\ rad/s$$

4. Stator Voltages

$$v_{ds} = 0\ p.u.$$
$$v_{qs} = 1\ p.u.$$

5. Rotor voltages

$$v_{dr} = v_{qr} = 0\ p.u.$$

6. Stator and Rotor Currents

$$i_{dr} = i_{qr} = i_{dr} = i_{qr} = 0\ p.u.$$

7. Electromagnetic Torque

$$T_e = X_m\left(i_{qs}i_{dr} - i_{ds}i_{qr}\right) = 0$$

8. The rotor is not loaded

$$T_m = 0$$
$$\frac{d\omega_r}{dt} = 0$$

Voltage Equations

$$
\begin{bmatrix} v_{qs} \\ v_{ds} \\ v_{0s} \\ v_{qr} \\ v_{qr} \\ v_{0r} \end{bmatrix}
=
\begin{bmatrix}
R_s + \frac{p}{\omega_b} X_s & \frac{\omega_s}{\omega_b} X_s & 0 & \frac{p}{\omega_b} X_m & \frac{\omega_s}{\omega_b} X_s & 0 \\
-\frac{\omega_s}{\omega_b} X_s & R_s + \frac{p}{\omega_b} X_s & 0 & -\frac{\omega_s}{\omega_b} X_m & \frac{p}{\omega_b} X_m & 0 \\
0 & 0 & R_s + \frac{p}{\omega_b} X_{ls} & 0 & 0 & 0 \\
\frac{p}{\omega_b} X_m & \frac{\omega_s - \omega_r}{\omega_b} X_m & 0 & R_r + \frac{p}{\omega_b} X_r & \frac{\omega_s - \omega_r}{\omega_b} X_r & 0 \\
-\frac{\omega_s - \omega_r}{\omega_b} X_m & \frac{p}{\omega_b} X_m & 0 & -\frac{\omega_s - \omega_r}{\omega_b} X_r & R_r + \frac{p}{\omega_b} X_r & 0 \\
0 & 0 & 0 & 0 & 0 & R_r + \frac{p}{\omega_b} X_{lr}
\end{bmatrix}
\begin{bmatrix} i_{qs} \\ i_{ds} \\ i_{0s} \\ i_{qr} \\ i_{dr} \\ i_{0r} \end{bmatrix}
$$

Current Equations

$$\begin{bmatrix} pi_{qs} \\ pi_{ds} \\ pi_{0s} \\ pi_{qr} \\ pi_{dr} \\ pi_{0r} \end{bmatrix} = B \begin{bmatrix} v_{qs} \\ v_{ds} \\ v_{0s} \\ v_{qr} \\ v_{qr} \\ v_{0r} \end{bmatrix} + A \begin{bmatrix} i_{qs} \\ i_{ds} \\ i_{0s} \\ i_{qr} \\ i_{dr} \\ i_{0r} \end{bmatrix} \; where\ B = \begin{bmatrix} \frac{1}{\omega_b} X_s & 0 & 0 & \frac{1}{\omega_b} X_m & 0 & 0 \\ 0 & \frac{1}{\omega_b} X_s & 0 & 0 & \frac{1}{\omega_b} X_m & 0 \\ 0 & 0 & \frac{1}{\omega_b} X_{ls} & 0 & 0 & 0 \\ \frac{1}{\omega_b} X_m & 0 & 0 & \frac{1}{\omega_b} X_r & 0 & 0 \\ 0 & \frac{1}{\omega_b} X_m & 0 & 0 & \frac{1}{\omega_b} X_r & 0 \\ 0 & 0 & 0 & 0 & 0 & \frac{1}{\omega_b} X_{lr} \end{bmatrix}^{-1}$$

and $A = -B \begin{bmatrix} R_s & \frac{\omega_s}{\omega_b} X_s & 0 & 0 & \frac{\omega_s}{\omega_b} X_s & 0 \\ -\frac{\omega_s}{\omega_b} X_s & R_s & 0 & -\frac{\omega_s}{\omega_b} X_m & 0 & 0 \\ 0 & 0 & R_s & 0 & 0 & 0 \\ 0 & \frac{\omega_s - \omega_r}{\omega_b} X_m & 0 & R_r & \frac{\omega_s - \omega_r}{\omega_b} X_r & 0 \\ -\frac{\omega_s - \omega_r}{\omega_b} X_m & 0 & 0 & -\frac{\omega_s - \omega_r}{\omega_b} X_r & R_r & 0 \\ 0 & 0 & 0 & 0 & 0 & R_r \end{bmatrix}$

Current Equation

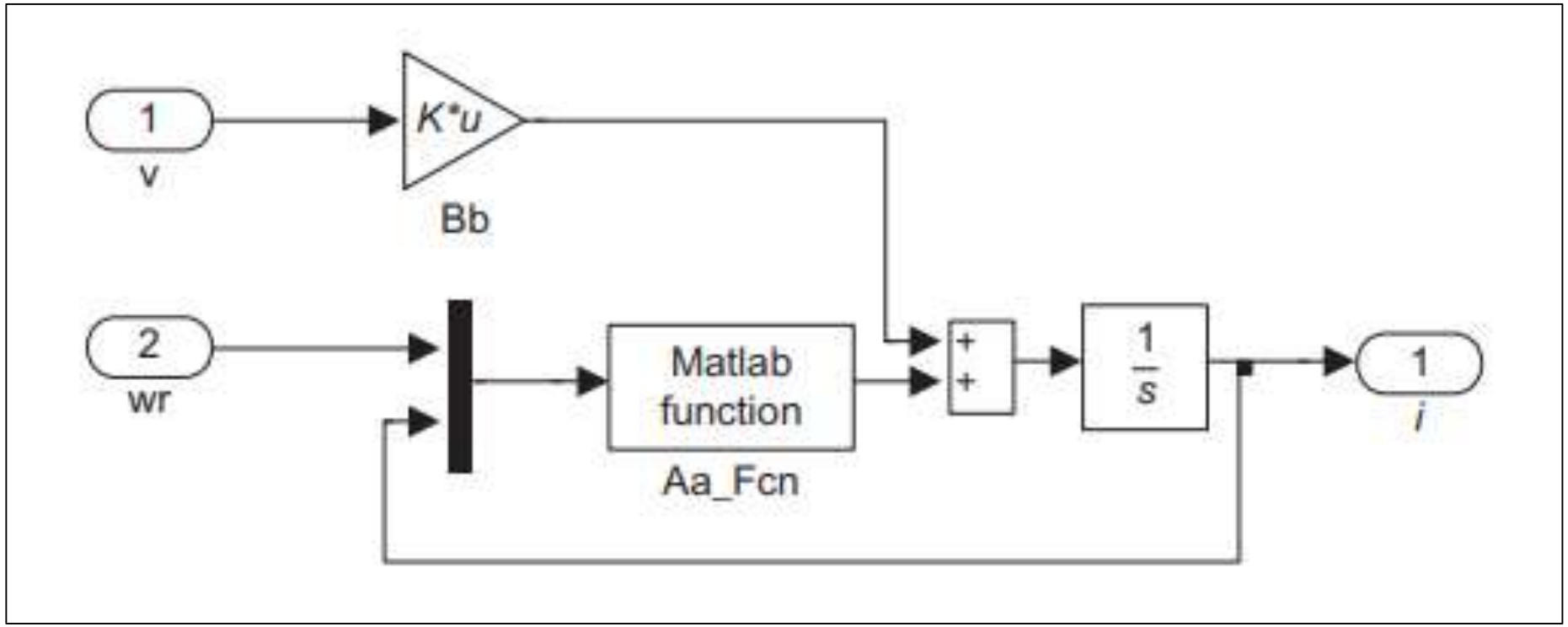

Motion and Torque Equations

1. $\frac{\omega_r}{\omega_b} = \frac{1}{2HS}(T_e - T_m)$

2. $T_e = X_m(i_{qs}i_{dr} - i_{ds}i_{qr})$

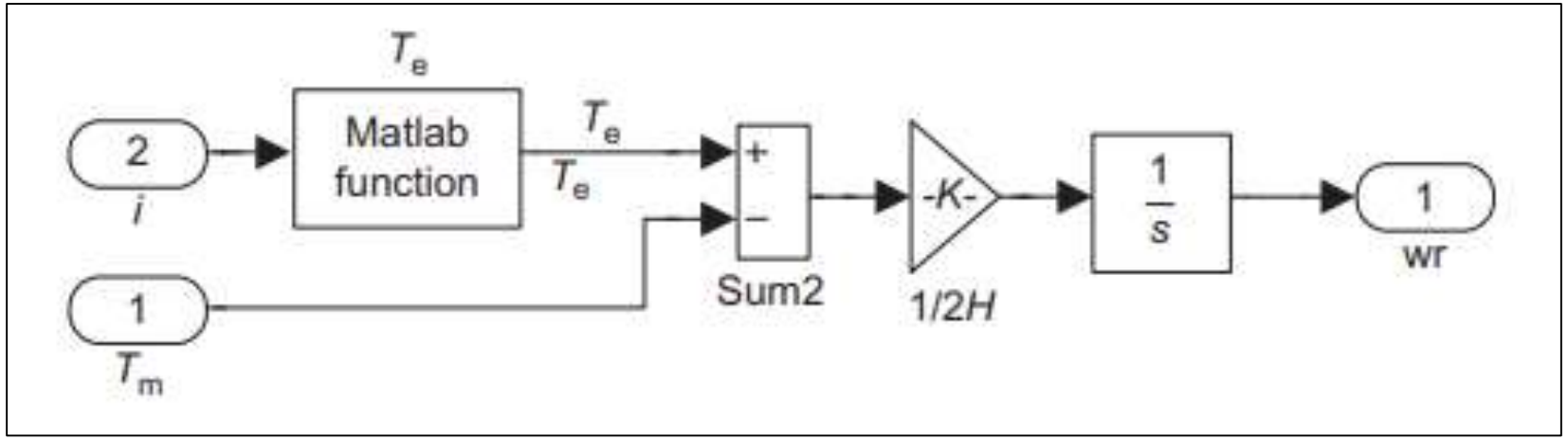

Free Acceleration Model

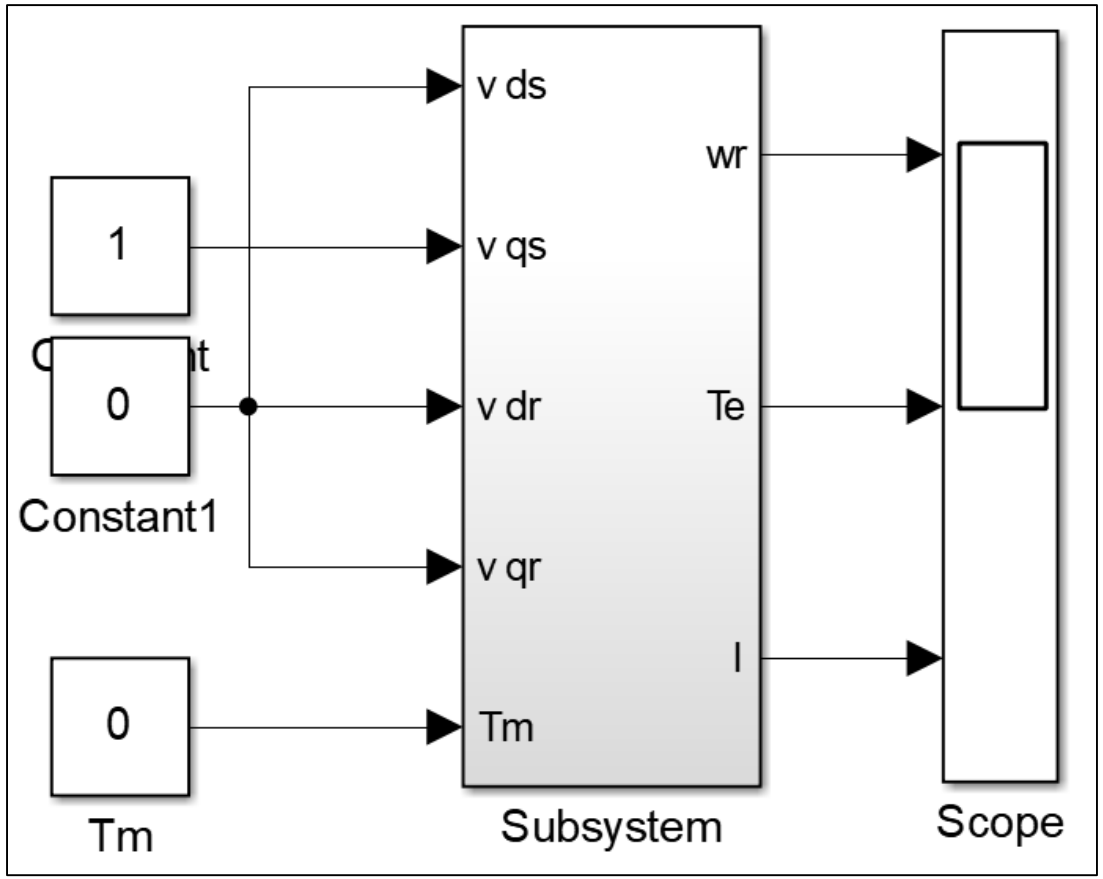

WECSConstants.m

```
Xls=0.0775;
Xm=2.042;
Xs=Xls+Xm;
Xlr=0.0322;
Xr=Xlr+Xm;
Rs=0.0453;
Rr=0.0222;
P=6;
f=60;
wb=2*pi*f;
ws=(12*pi*f)/P;
H=0.5;
B=inv([
    (Xs/wb)  0        0         (Xm/wb)  0        0;
    0        (Xs/wb)  0         0        (Xm/wb)  0;
    0        0        (Xls/wb)  0        0        0;
    (Xm/wb)  0        0         (Xr/wb)  0        0;
    0        (Xm/wb)  0         0        (Xr/wb)  0;
    0        0        0         0        0        (Xlr/wb)
    ]);

Z=[
    Rs                ((ws/wb)*Xs)    0  0                 ((ws/wb)*Xm)    0;
    -((ws/wb)*Xs)     Rs              0  -((ws/wb)*Xm)    0               0;
    0                 0               Rs 0                0               0;
    0                 (((ws)/wb)*Xm)  0  Rr               (((ws)/wb)*Xr)  0;
    -(((ws)/wb)*Xm)   0               0  -(((ws)/wb)*Xr)  Rr              0;
    0                 0               0  0                0               Rr
    ];
```

SCIG Machine Model

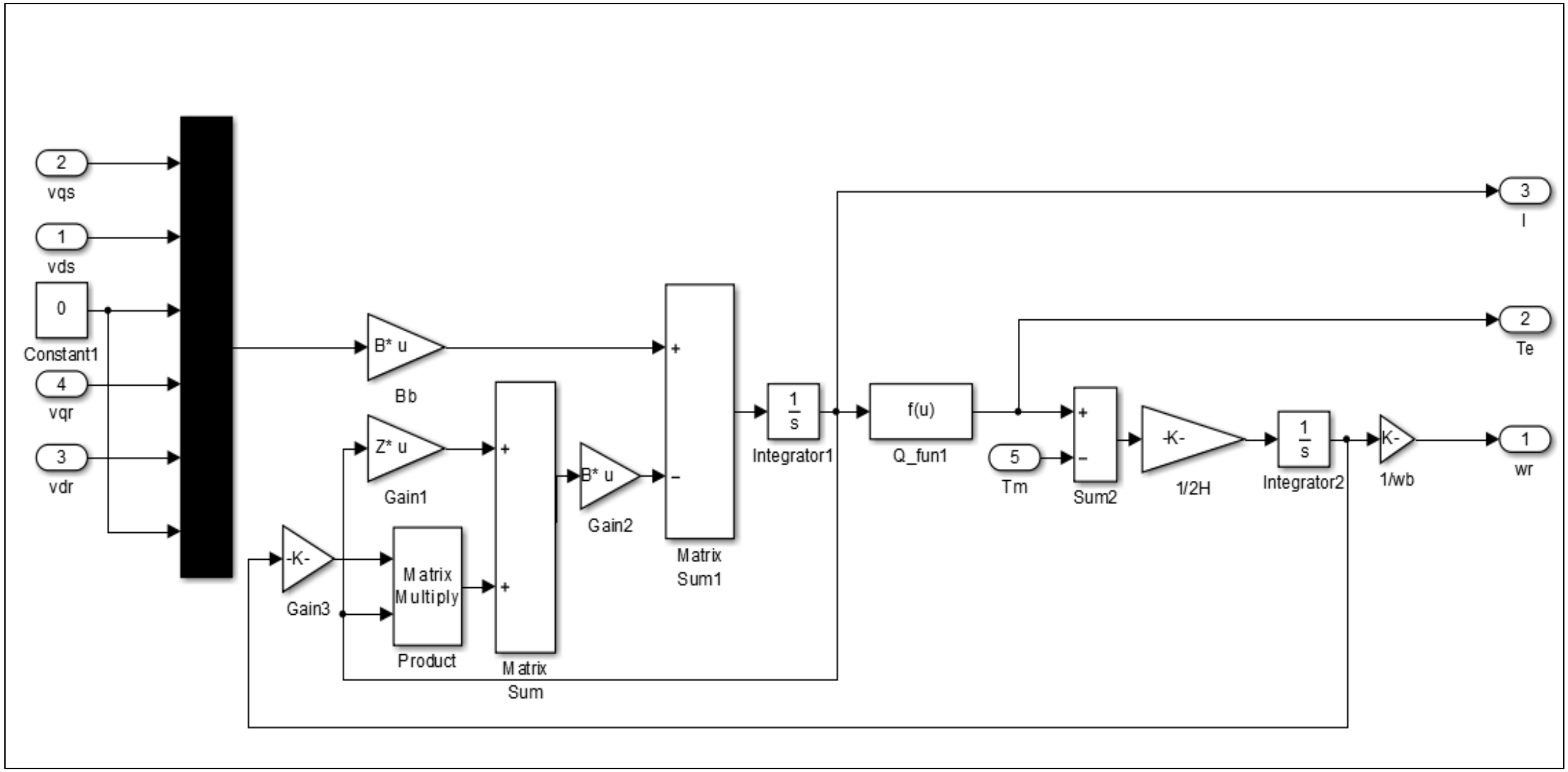
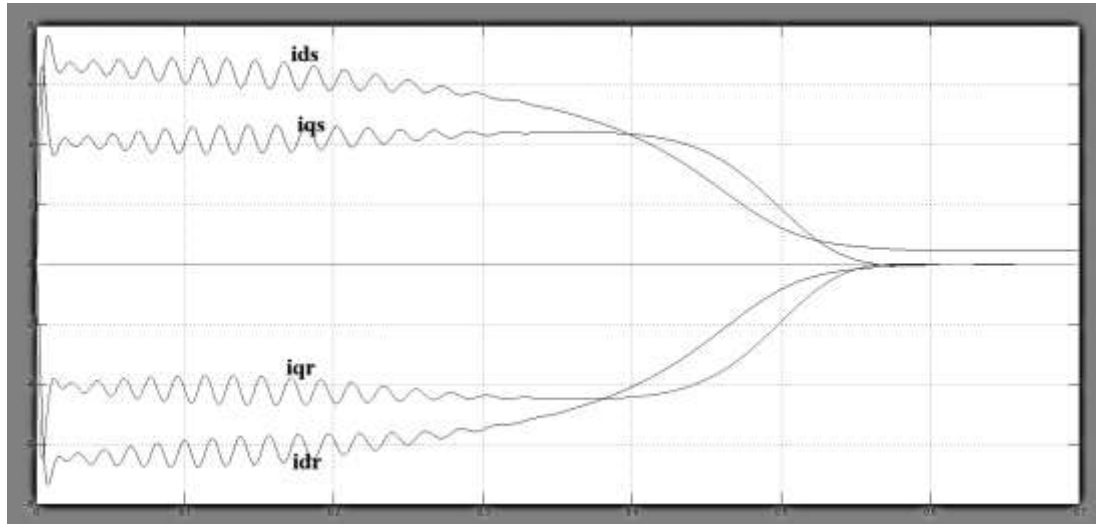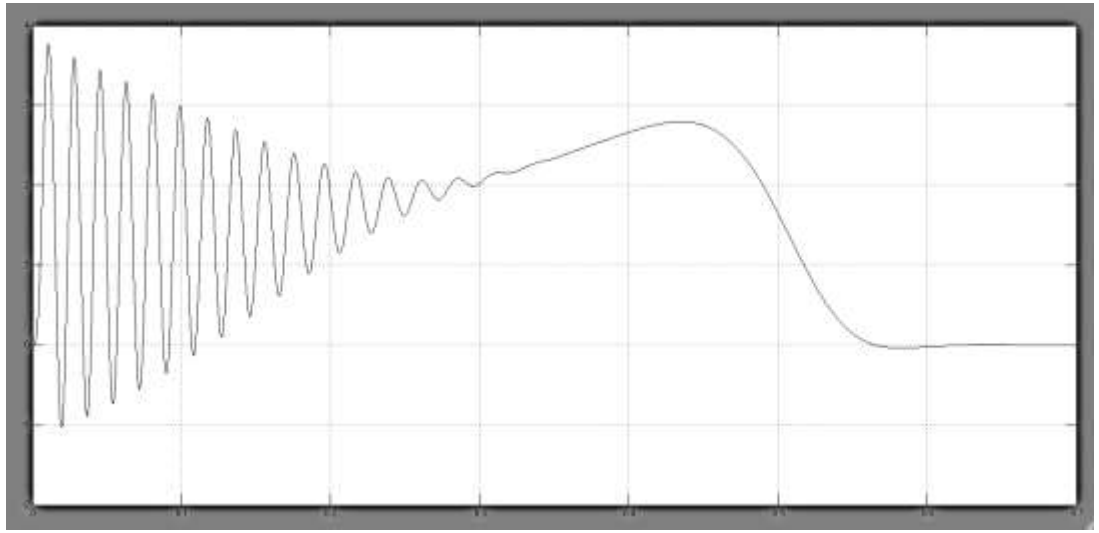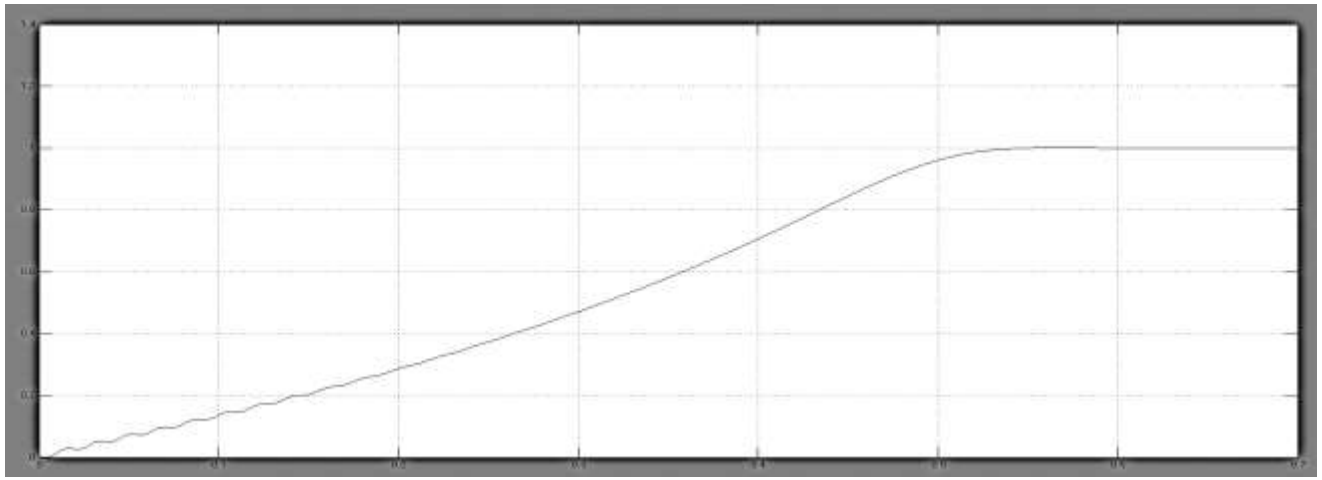
Currents, Torque and Rotor Speed