Wind Energy Conversion Systems
Assignment 3
Dynamic performance of Standalone PMSG

M.Shamaas

2018-MS-EE-4

Dynamic performance of Standalone PMSG

- The non-salient pole PMSG is loaded with a three-phase balanced resistive load R and operates at 320 rpm (0.8 pu) at a given wind speed. The loading of the generator is changed by switch S. When S is closed, the load resistance is reduced to R/2 per phase.

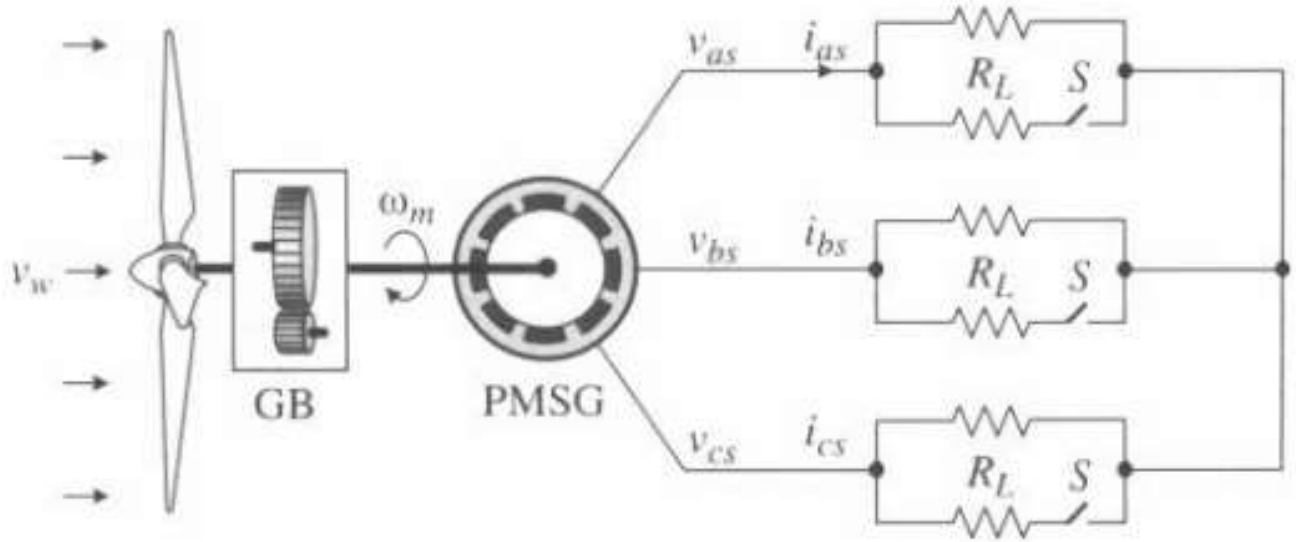

PMSG d- and q- axis Circuits

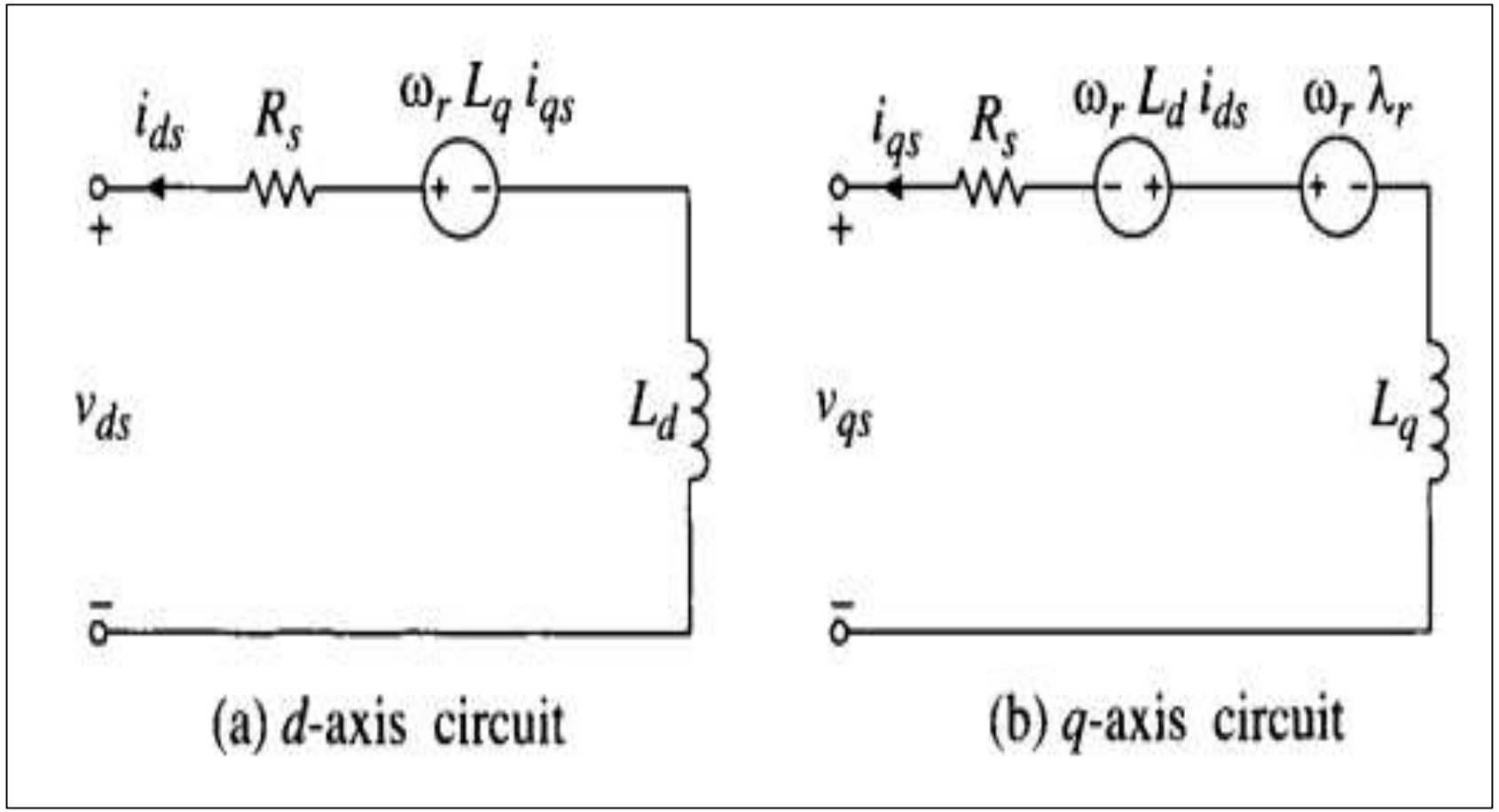

PMSG Machine Constants

1) Rated Line-Line Voltage
$$V_{rated,LL} = 4000\ V(rms)$$
2) Rated Stator Current
$$I_{rated} = 490\ A(rms)$$
3) Base Impedance
$$Z_{base} = 4.6797\ \Omega$$
4) Number of Pole Pairs
$$P = 8$$
5) Rated Stator Frequency
$$f_e = 53.33\ Hz$$
6) Stator Winding Resistance
$$R_s = 24.21 m\Omega$$
7) d-axis Inductance
$$L_q = 9.816 mH$$
8) q-axis Inductance
$$L_d = 9.816 mH$$
9) Rated Rotor Flux Linkage
$$\lambda_r = 4.971\sqrt{2}\ Wb$$
10) Rotor Speed
$$n_{m,rated} = 400 rpm$$
11) Rated Mechanical Torque
$$T_e = 58458.5\ Nm$$

Initial Conditions (t = 0-)

1) The synchronous reference frame speed

$$\omega = \omega_r$$

2) Electrical Frequency

$$f_e = 50\ Hz$$

3) Rotor Speed

$$n_m = 0.8 * 400rpm = 320rpm$$

$$\omega_r = P\frac{2\pi}{60}n_m = 268.08\ rad/s$$

4) Stator Currents

$$i_{ds} = 0.1657\ p.u.$$

$$i_{qs} = 0.3792\ p.u.$$

5) Load Resistance

$$R_L = \frac{v_{ds}}{i_{ds}} = \frac{v_{qs}}{i_{qs}} = 1.25\ p.u. = 6\ \Omega$$

PMSG d- and q- axis Equations

1) Flux Linkage Equations:

$$\lambda_{ds} = -(L_{ls}+L_{dm})\, i_{ds} + L_{dm}\, I_f = -L_d\, i_{ds} + \lambda_r$$

$$\lambda_{qs} = -(L_{ls}+L_{qm})\, i_{qs} = -L_q\, i_{qs}$$

2) Voltage Equations

$$v_{ds} = -R_s i_{ds} + \omega_r L_q i_{qs} - pL_d i_{ds} = R_L i_{ds}$$

$$v_{qs} = -R_s i_{qs} - \omega_r L_d i_{ds} - pL_q i_{qs} + \omega_r \lambda_r = R_L i_{qs}$$

3) Torque Equation

$$T_e = \frac{3P}{2}\left(i_{qs}\lambda_r - \left(L_q - L_d\right) i_{ds} i_{qs}\right) = \frac{3P}{2}\left(i_{qs}\lambda_r\right)$$

System Block Diagram

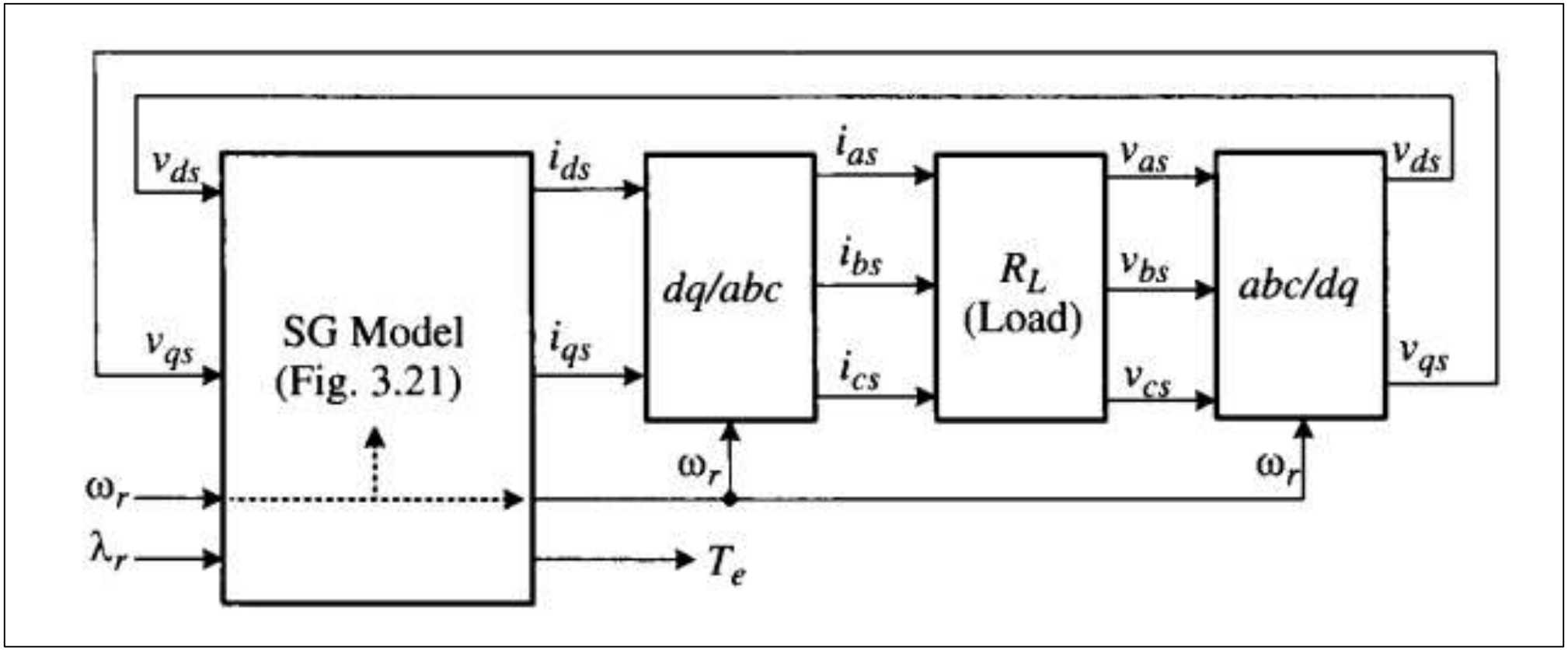

abc/dq Transformation

$$\begin{bmatrix} x_d \\ x_q \end{bmatrix} = \frac{2}{3}\begin{bmatrix} cos(\omega_r t) & \cos(\omega_r t - \frac{2\pi}{3}) & \cos(\omega_r t - \frac{4\pi}{3}) \\ -\sin(\omega_r t) & -\sin(\omega_r t - \frac{2\pi}{3}) & -\sin(\omega_r t - \frac{4\pi}{3}) \end{bmatrix}\begin{bmatrix} x_a \\ x_b \\ x_c \end{bmatrix}$$

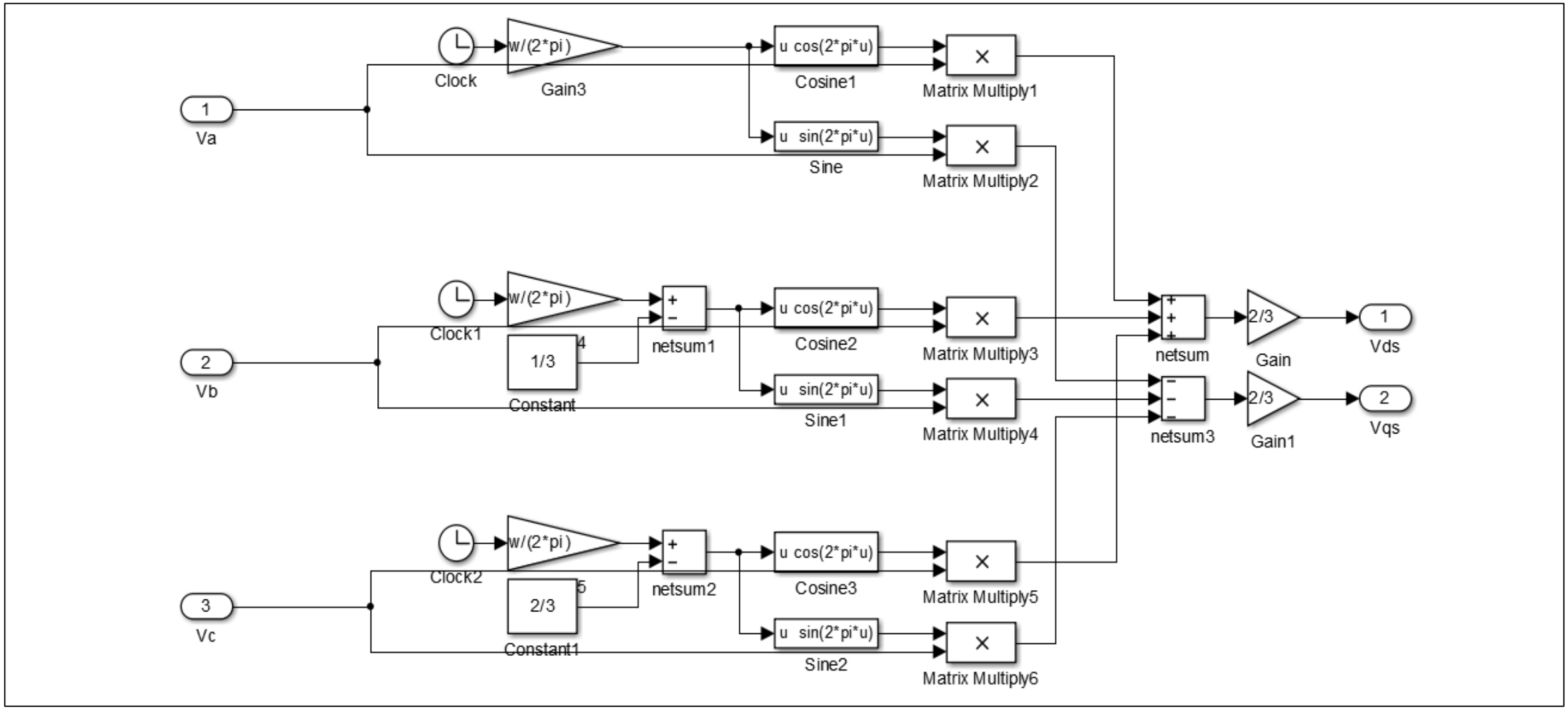

dq/abc Transformation

$$\begin{bmatrix} x_a \\ x_b \\ x_c \end{bmatrix} = \begin{bmatrix} cos(\omega_r t) & -\sin(\omega_r t) \\ \cos(\omega_r t - \frac{2\pi}{3}) & -\sin(\omega_r t - \frac{2\pi}{3}) \\ \cos(\omega_r t - \frac{4\pi}{3}) & -\sin(\omega_r t - \frac{4\pi}{3}) \end{bmatrix} \begin{bmatrix} x_d \\ x_q \end{bmatrix}$$

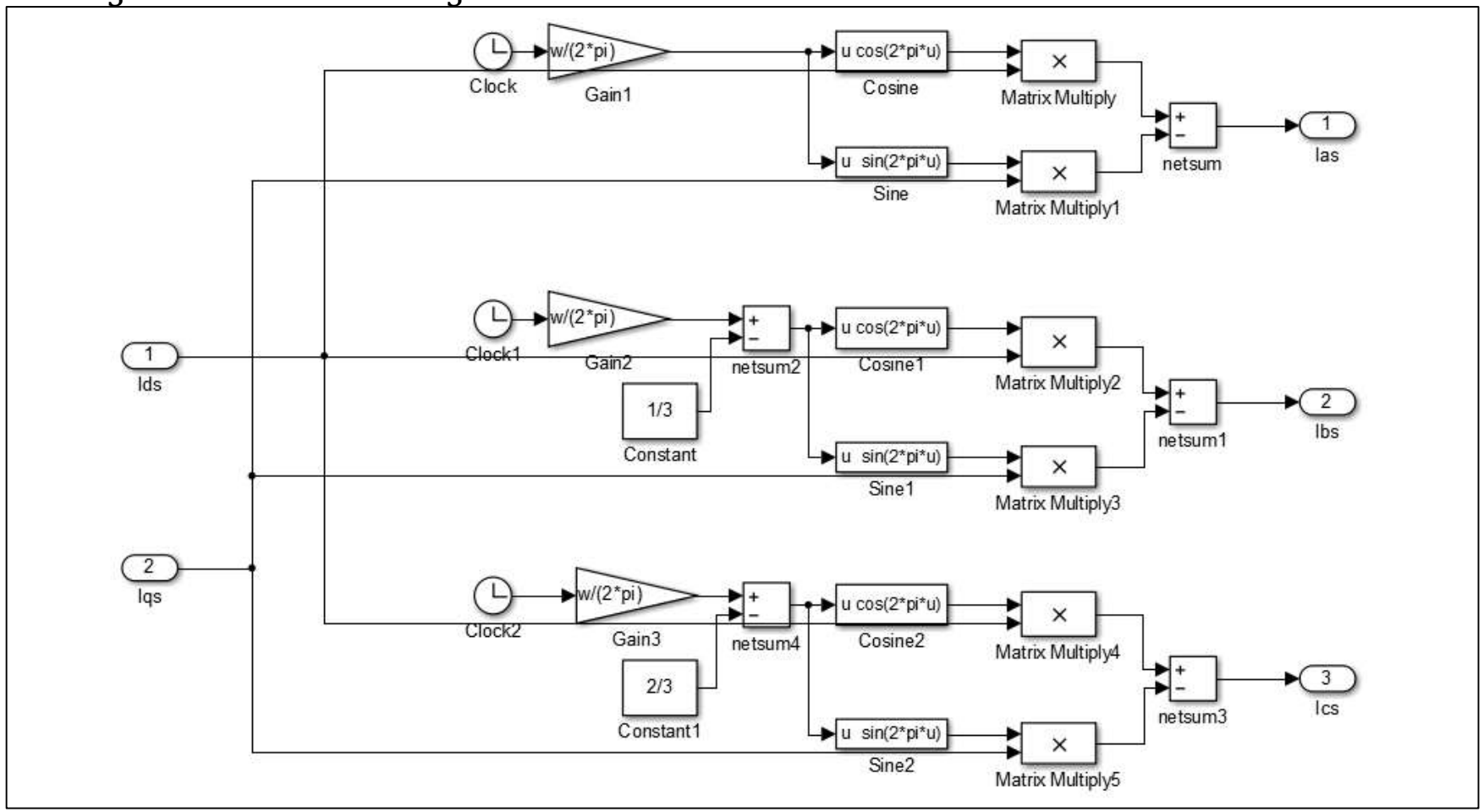

PMSG System

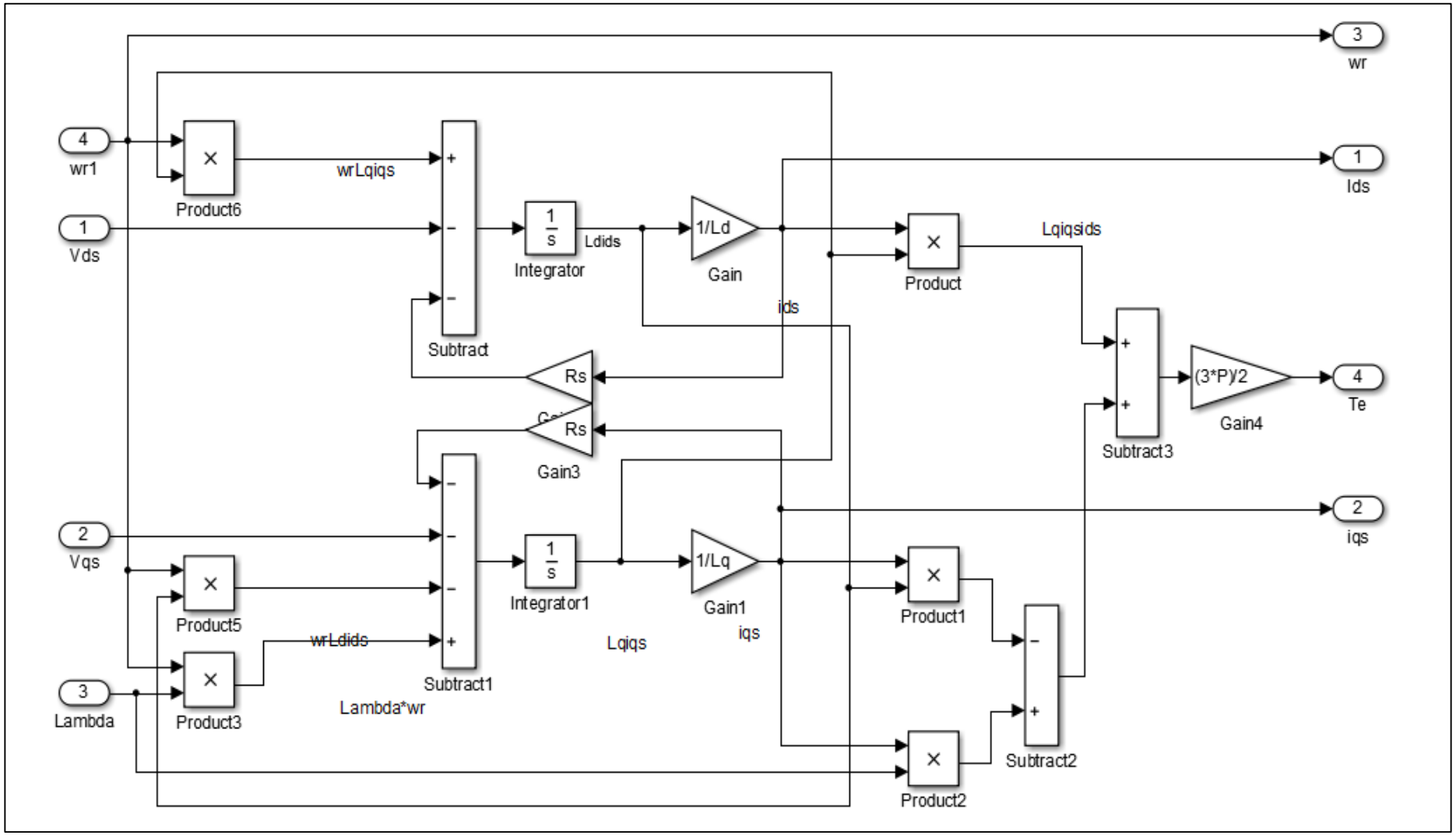
3
wr
4
wr1
1
Vds
Product6
wrLqiqs
Subtract
1
s
Integrator
Ldids
1/Ld
Gain
ids
Product
Lqiqsids
1
Ids
Rs
Rs
Gain3
Subtract3
(3*P)/2
Gain4
4
Te
2
Vqs
2
iqs
Product5
1
s
Integrator1
1/Lq
Gain1
iqs
Lqiqs
Product1
wrLdids
Subtract1
3
Lambda
Product3
Lambda*wr
Subtract2
Product2

Resistive Load and Ideal Switches

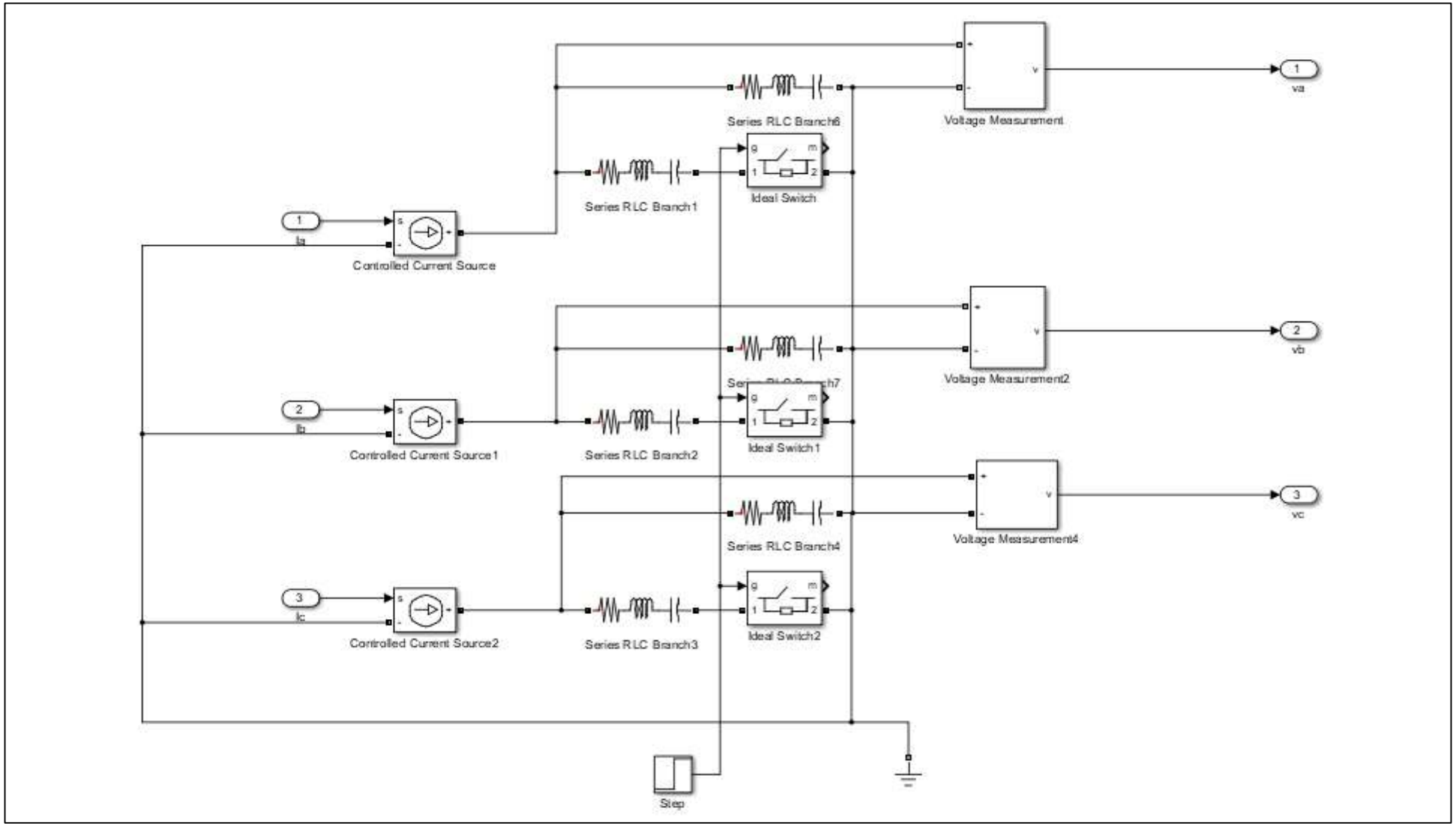

Block diagram for dynamic simulation of standalone PMSG.

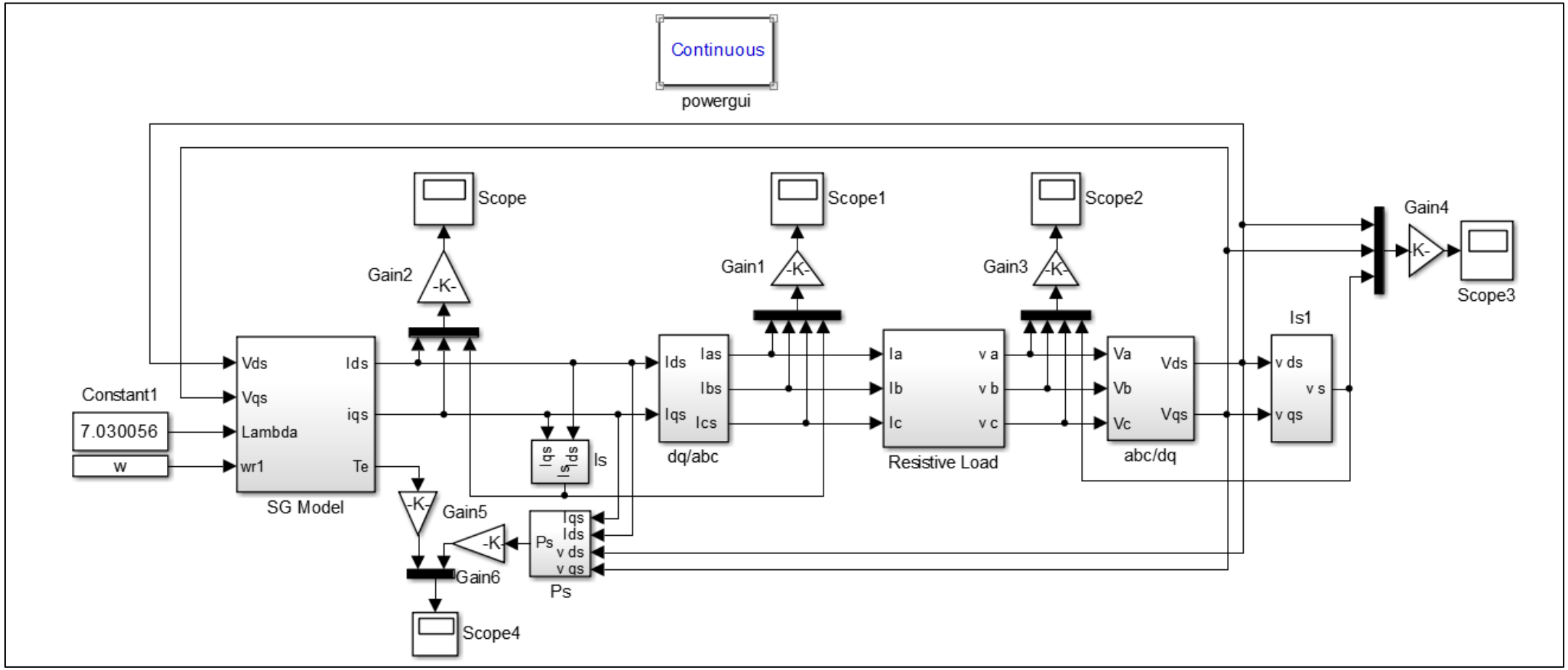

dq variables

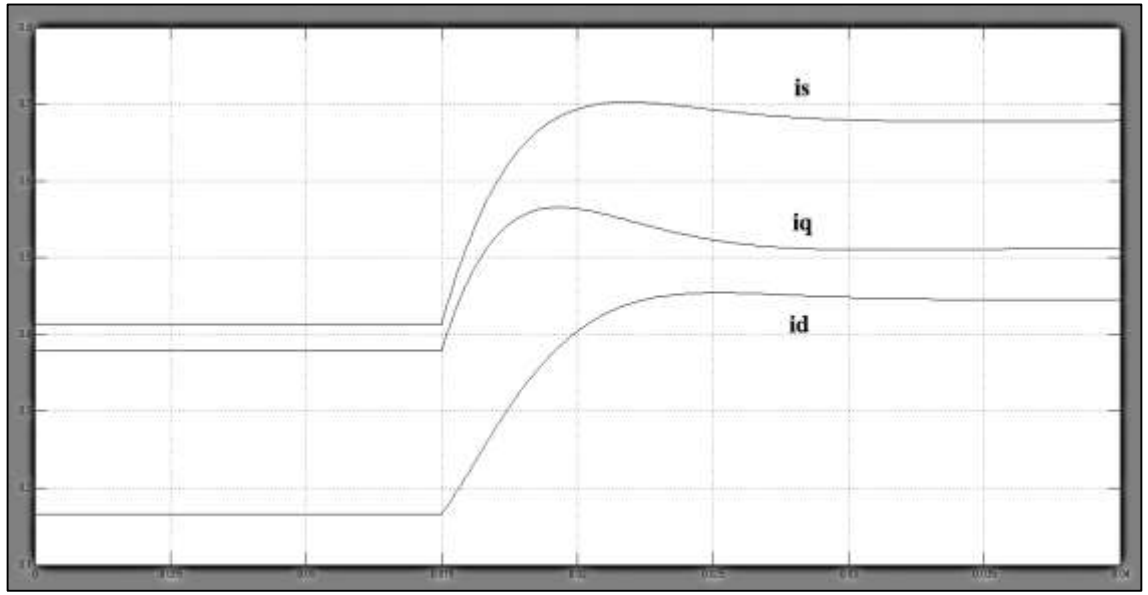

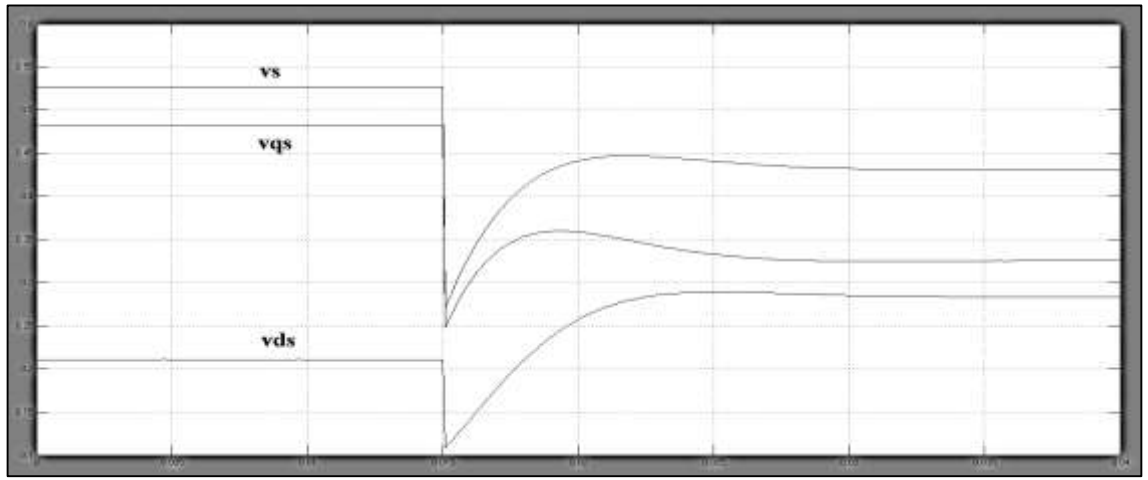

abc variables

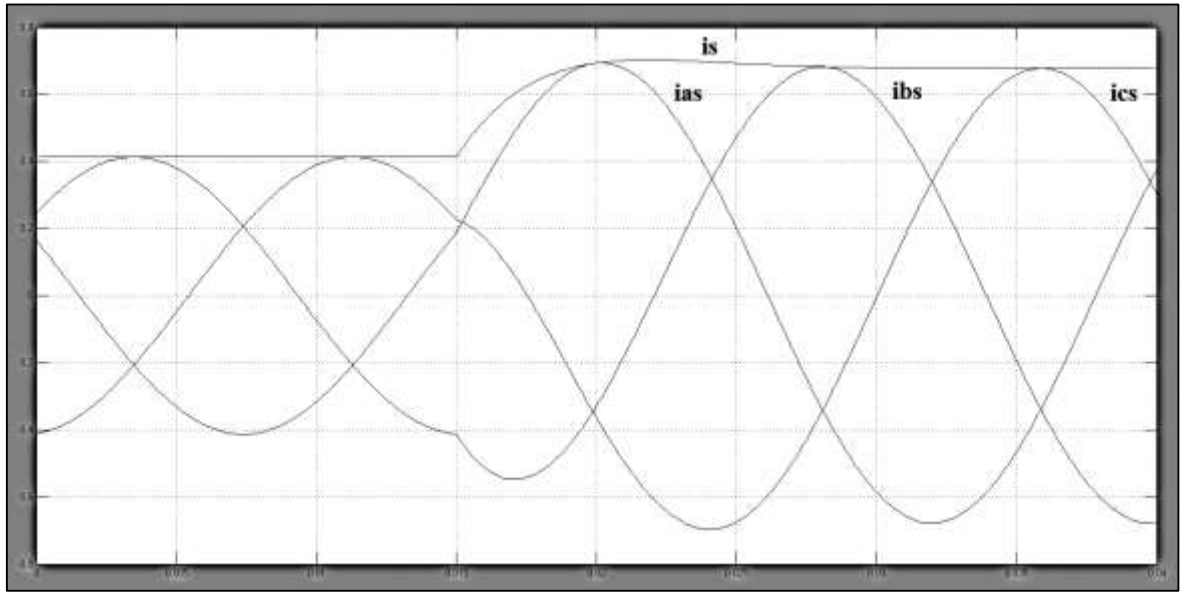

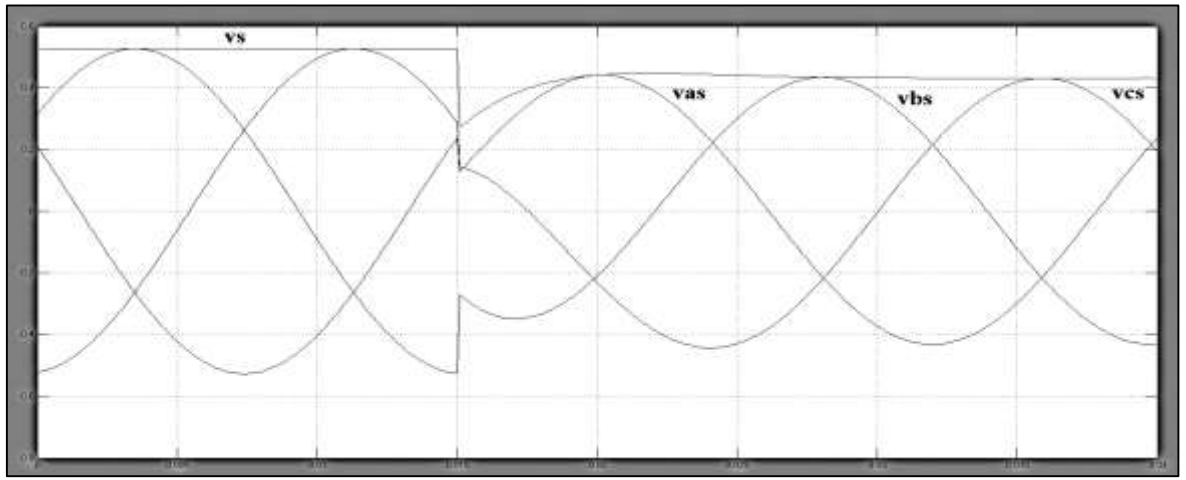

Torque and Power

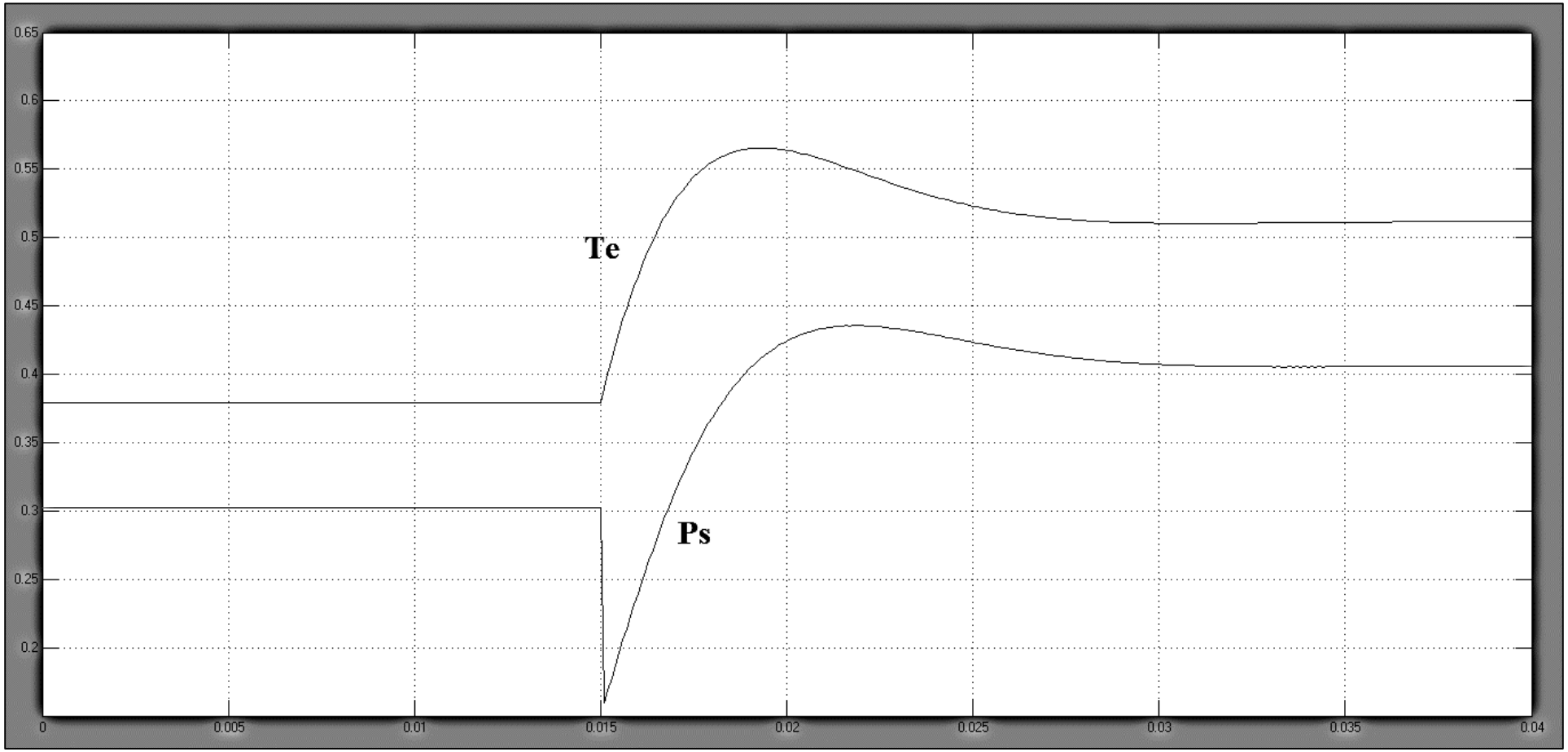

Conclusion

1. The generator initially operates in steady state with a resistive load of R.
2. The load resistance is reduced to R/2 by closing switches at t = 0.015 sec. After a short transient period, the system reaches a new steady-state operating point.
3. The dq-axis stator currents, ids and iqs, in the synchronous frame are DC variables, whereas the abc-axis stator currents, ias, ibs, and ics, in the stationary frame are sinusoids in steady state. The magnitude of the stator current represents the peak value of ias, ibs and ics. A similar phenomenon can be observed for the stator voltages.
4. A decrease in the load resistance results in an increase in the stator currents (is increases from 0.4139 p.u. to 0.6738 p.u.), but the stator voltages are reduced (vs reduces from 0.5266 p.u. to 0.4316 p.u.) mainly due to the voltage drop across the stator inductances.
5. The electromagnetic torque Te and stator active power Ps are increased (Te increases from 0.3792 p.u. to 0.5118 p.u., Ps increases from 0.3021 p.u. to 0.4061 p.u.) accordingly when the system operates at the new operating point.