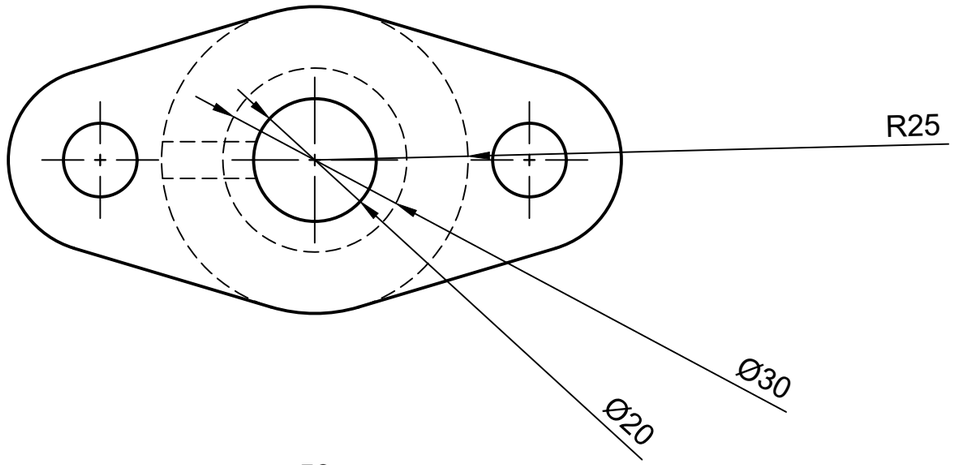

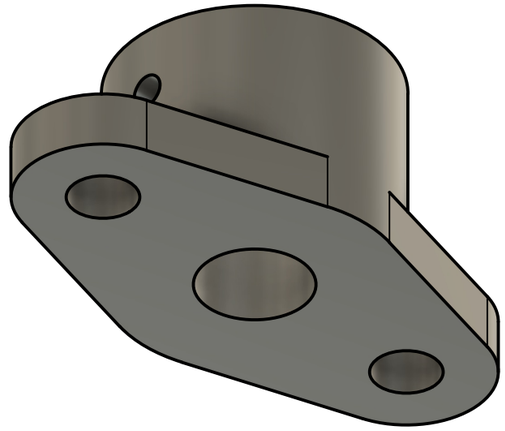

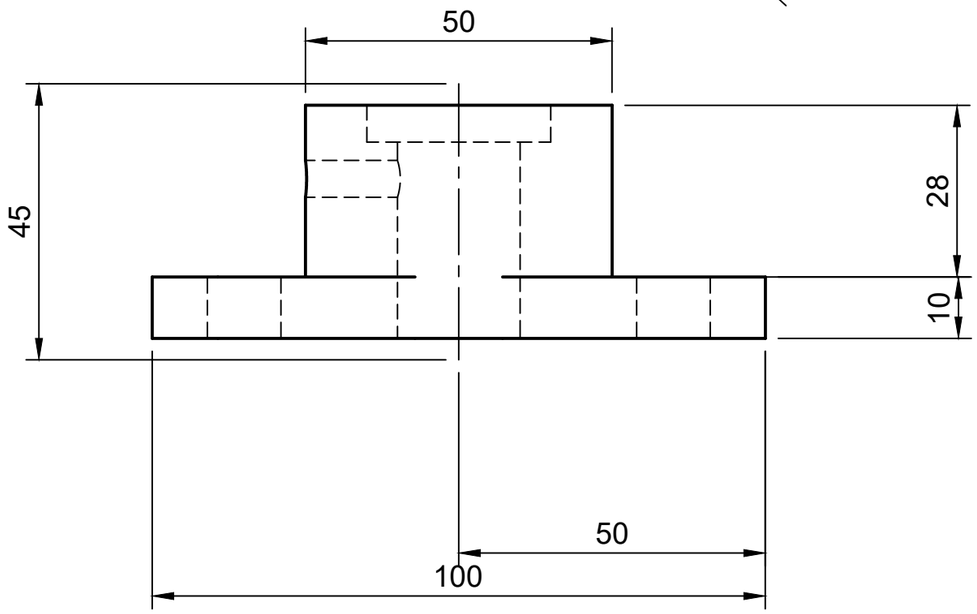

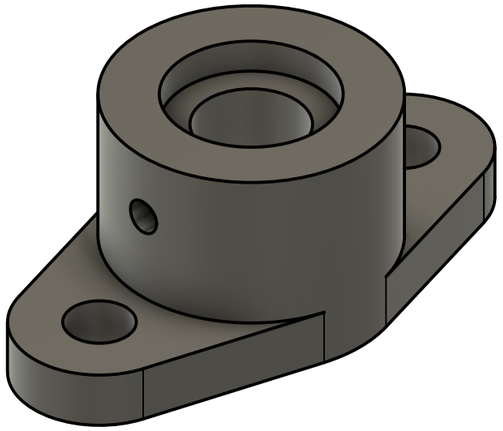

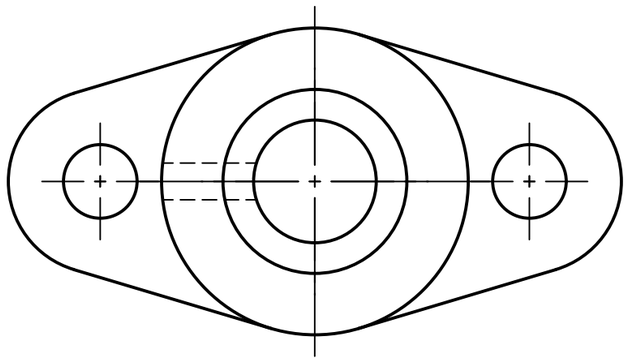

Dept.	Technical reference	Created by		Approved by
CSE	212225040263	MUKHIL S	15-03-2026	DR. THAMARAI SELVAN A
		Document type: EDM		Document status
		Title: 4.1		DWG No.: 7
			Rev.	Date of issue: 15-03-2026 / Sheet: 1/1