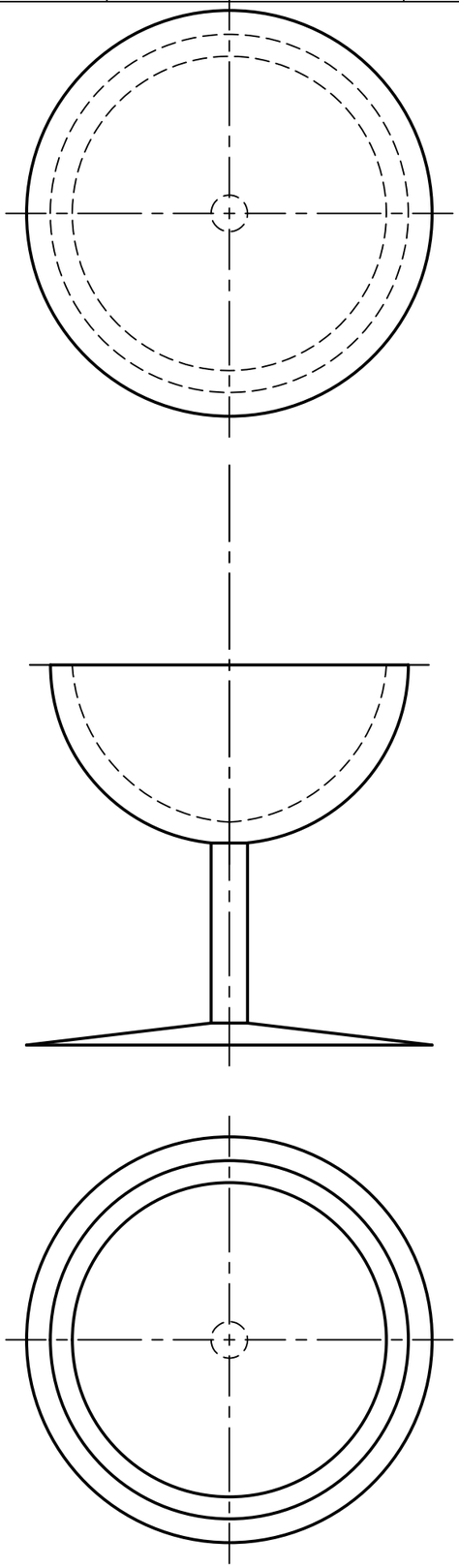

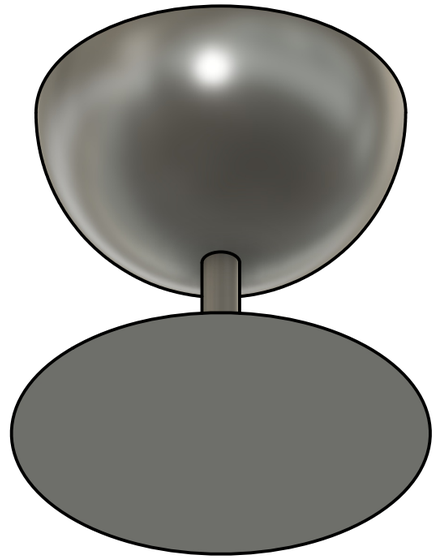

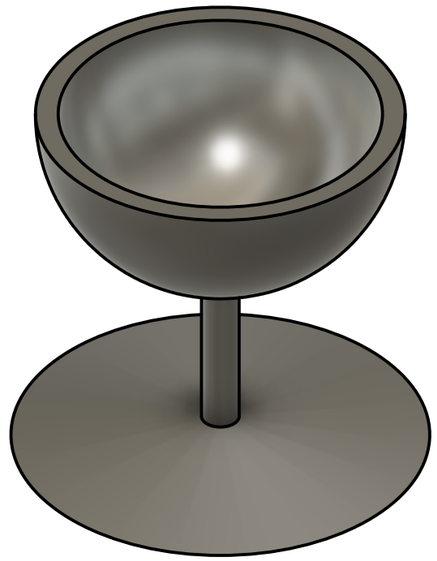

Dept.	Technical reference	Created by	Approved by
CSE	212225040263	MUKHIL S 15-03-2026	DR. THAMARAI SELVAN A
		Document type: EDM	Document status:
		Title: 4.2	DWG No.: 8
			Rev. / Date of issue: 15-03-2026 / Sheet: 1/1