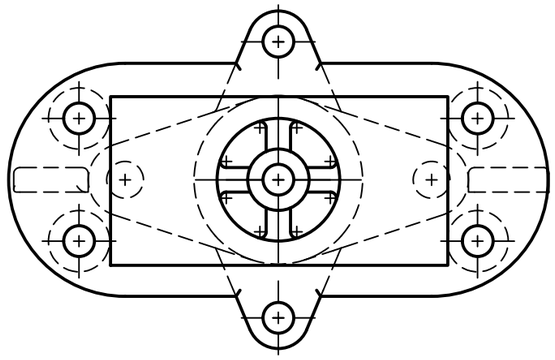

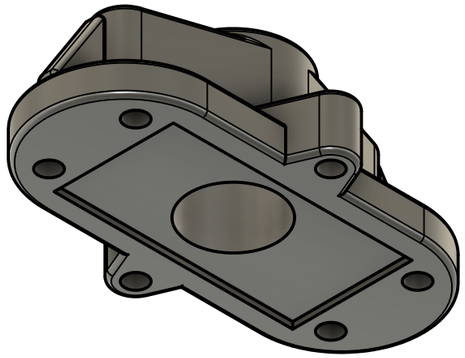

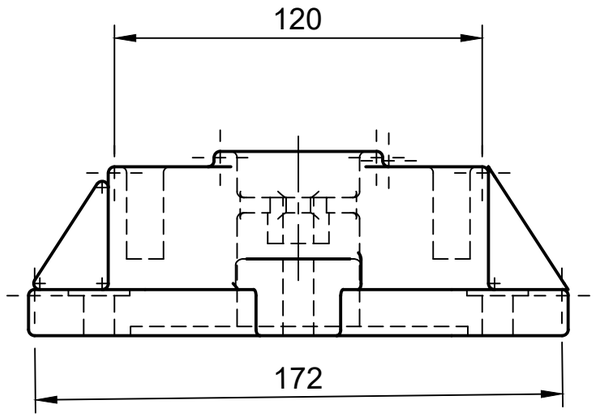

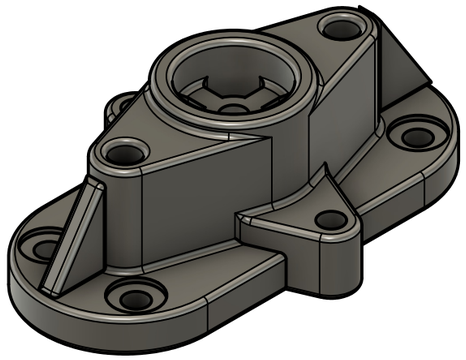

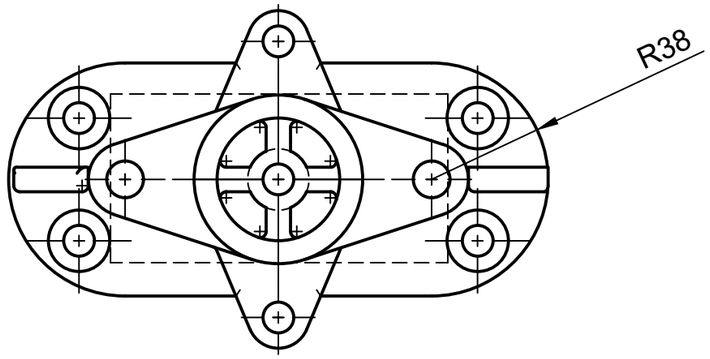

Dept.	Technical reference	Created by		Approved by
CSE	212225040263	MUKHIL S	16-03-2026	DR. THAMARAI SELVAN A
		Document type: EDM		Document status
		Title: 5.1		DWG No.: 8
			Rev.	Date of issue: 16-03-2026 / Sheet: 1/1