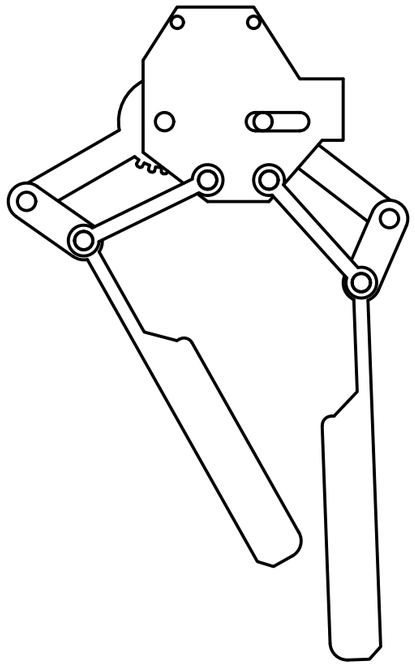

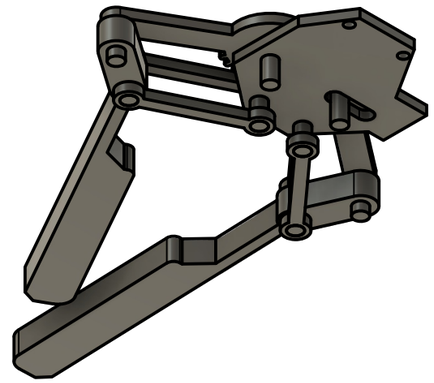

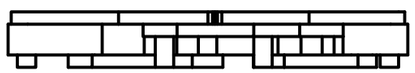

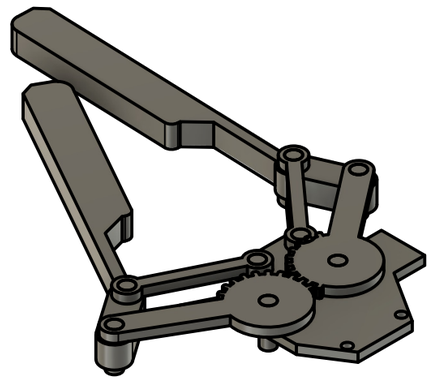

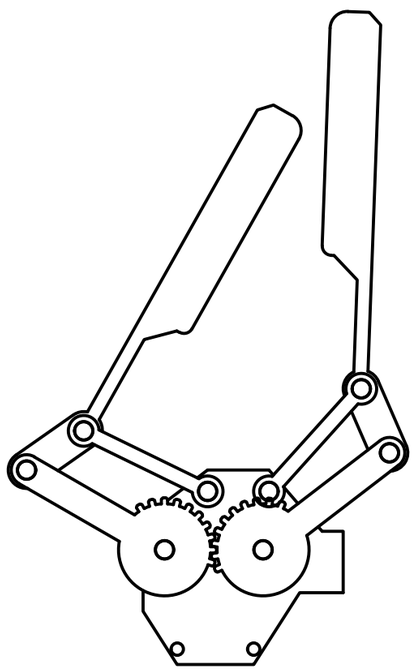

Dept.	Technical reference	Created by		Approved by
CSE	212225040263	MUKHIL S	16-03-2026	DR.THAMARAI SELVAN A
		Document type: EDM		Document status:
		Title: 6.1		DWG No.: 11
			Rev.	Date of issue: 16-03-2026 / Sheet: 1/1