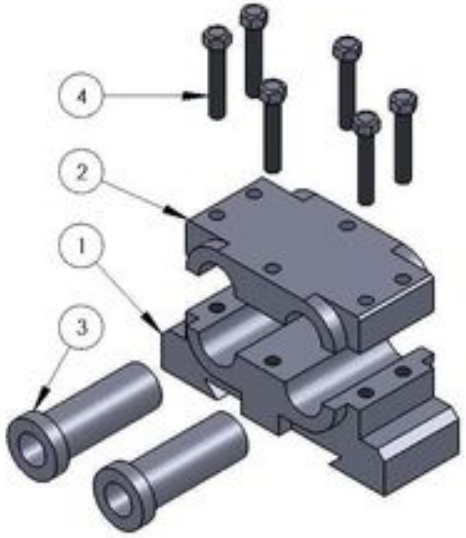

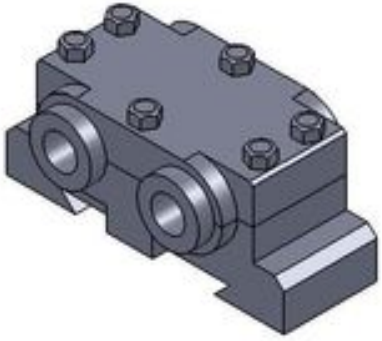

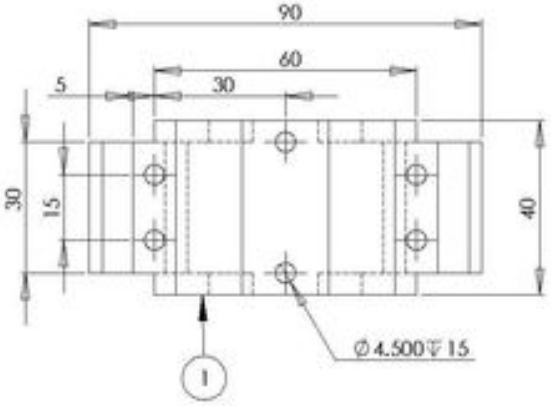

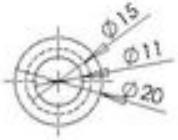

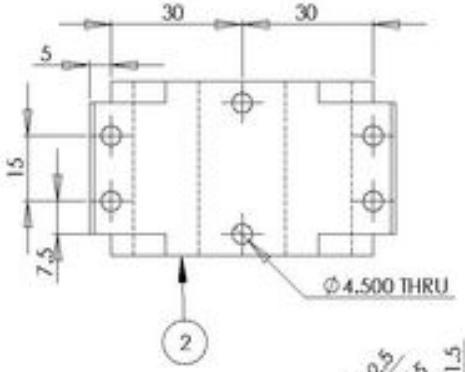

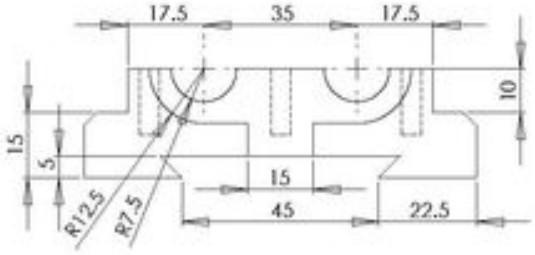

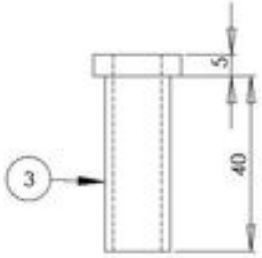

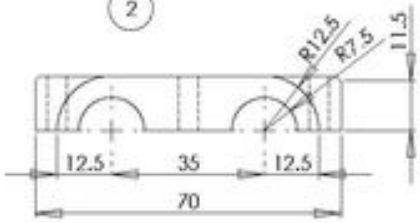

UNLESS OTHERWISE SPECIFIED: DIMENSIONS ARE IN MILLIMETERS SURFACE FINISH TOLERANCES: LINEAR ANGULAR	FINISH	DEBUR AND BREAK SHARP EDGES	DO NOT SCALE DRAWING	REVISION
NAME	SIGNATURE	DATE	**S-Technology, Inc.** Krizia Bldg. Gorordo Ave. Cebu City, Cebu Philippines 6000	
DRAWN				
CHK'D				
APPV'D				
MFG				
Q.A.			MATERIAL	DWG NO. A3
			WEIGHT	SCALE: 1:1 SHEET 1 OF 1