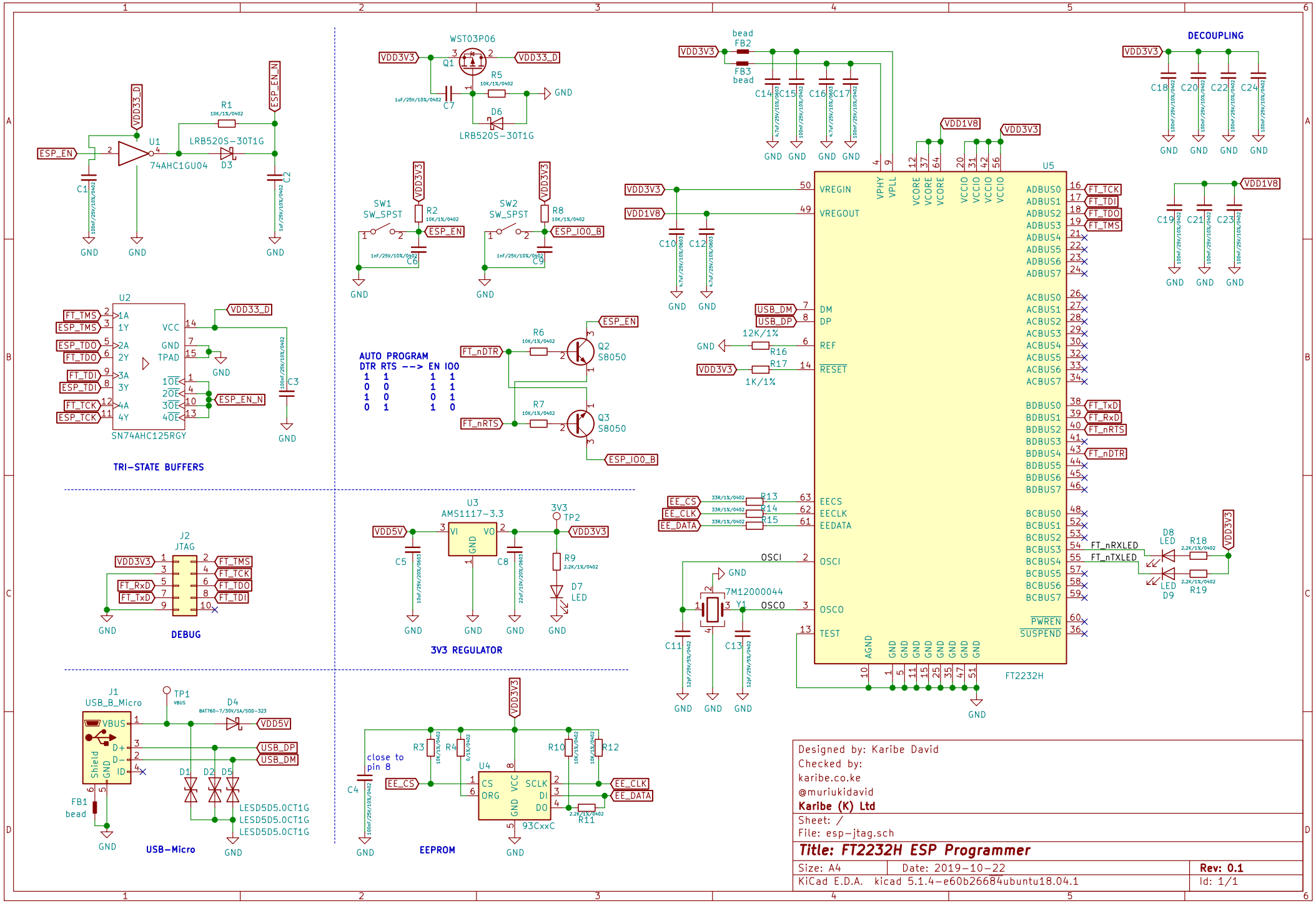
TRI-STATE BUFFERS
U1
74AHC1GU04
LRB520S-30T1G
U2
SN74AHC125RGY
AUTO PROGRAM
DTR RTS --> EN IO0
1 1 1 1
0 0 1 1
1 0 0 1
0 1 1 0
WST03P06
Q1
R5
D6
LRB520S-30T1G
SW1
SW_SPST
SW2
SW_SPST
Q2
S8050
Q3
S8050
DEBUG
J2
JTAG
3V3 REGULATOR
U3
AMS1117-3.3
USB-Micro
J1
USB_B_Micro
EEPROM
U4
93CxxC
close to pin 8
DECOUPLING
U5
FT2232H
7M12000044
Y1
D8
LED
D9
LED
D7
LED
Designed by: Karibe David
Checked by:
karibe.co.ke
@muriukidavid
Karibe (K) Ltd
Sheet: /
File: esp-jtag.sch
Title: FT2232H ESP Programmer
Size: A4
Date: 2019-10-22
Rev: 0.1
KiCad E.D.A. kicad 5.1.4-e60b26684ubuntu18.04.1
Id: 1/1