NATIONAL INSTITUTE OF TECHNOLOGY KURUKSHETRA

THEORY EXAMINATION

Question Paper

Month and year of the Exam **May 2025** **Roll No.** 124104072

Program: **B. Tech**

Subject: **Electric Circuit Theory (ECT)** Semester: **2nd**

Course No: **EEPC-101** Maximum Marks: **50**

Number of Questions to be Attempted: 5 Time allowed.: **3 Hrs**

Total No. of Questions: 6 Total No. of Pages Used: 4

Unless stated otherwise, the symbols have their usual meanings in context with the subject. Assume suitably and state, additional data required, if any.

The candidates before starting to write the solutions, should check the question paper for any discrepancies, and ensure that they have delivered the question paper of the **right course no.** and the right subject title.

Q 1. (a)	Find ***node voltages*** as shown in the circuit in **Fig. 1** using nodal analysis. 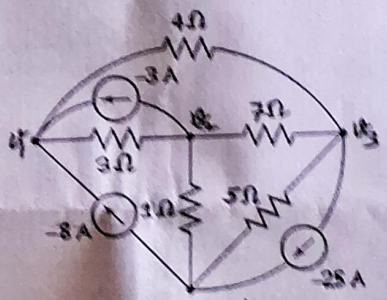 Fig. 1.	5
(b)	Determine the power supplied by the 2 V source of **Fig. 2** using Mesh analysis (mesh currents are already labelled). 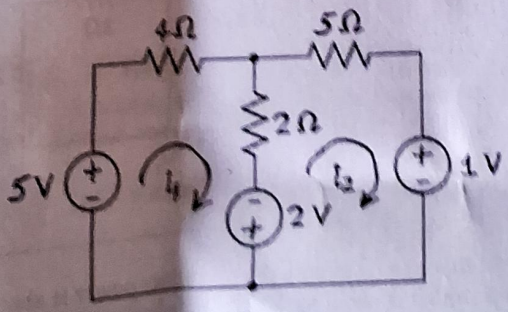 Fig. 2.	5
Q 2. (a)		5

	Use superposition theorem to solve for V_o in the circuit of **Fig. 3.** 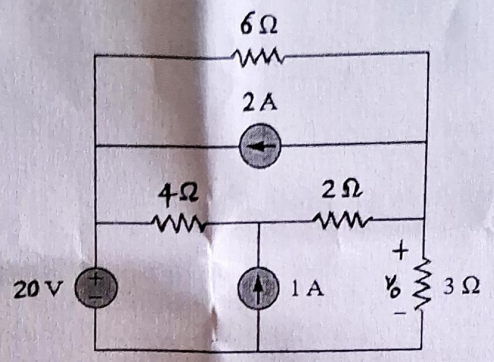 **Fig. 3.**	
(b)	Using Norton's theorem, find I_N and R_N of the circuit in **Fig. 4** at terminals ***a-b***. 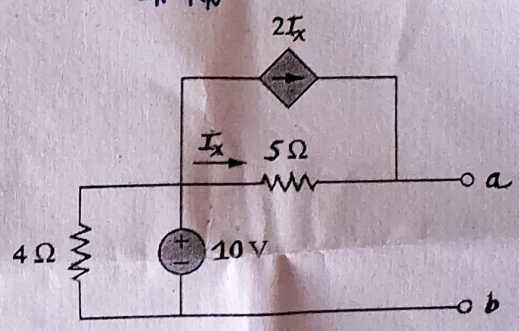 **Fig. 4.**	5
Q 3. (a)	In the circuit shown in **Fig. 5**, the resistance of the branch having **5 Ω** resistance has changed to **6 Ω** due to the connection of an ammeter having an internal resistance of **1 Ω.** Determine the value of compensation source voltage using the compensation theorem. 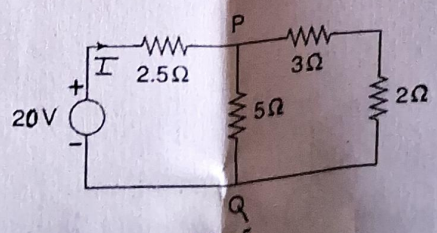 **Fig. 5**	5
(b)	Prove/derive that in a dc circuit, the maximum power is absorbed by the resistive load when its value is equal to the Thevenin resistance.	5

Q 4. (a)	For the circuit in **Fig. 6**, find the frequency ω for which and are in phase. $V(t)$ $I(t)$ 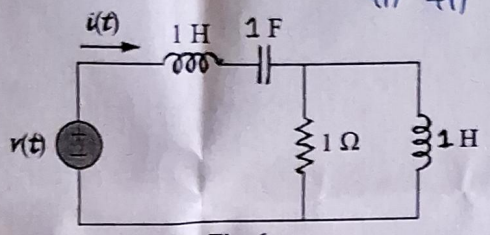 **Fig. 6.**	5
(b)	Obtain the z parameters for the circuit in **Fig. 7.** 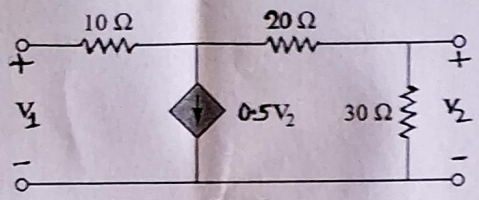 **Fig. 7.**	5
Q 5. (a)	For the given graph shown in **Fig. 8**, write down the basic tieset matrix and taking a tree of branches 2, 4, 5, write down KVL equations from the matrix. 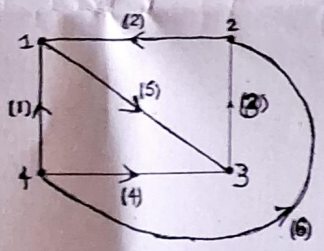 Fig. 8	5
(b)	Explain the concept of self-inductance and mutual inductance. Also, define the mutually induced voltage considering the two circuits that are placed near to each other and each of them contain one coil of inductor each.	5
Q 6. (a)	Solve for the response y in the following integrodifferential equation using Laplace Transform. $$\frac{dy}{dt} + 5y(t) + 6\int_0^t y(\tau)\,d\tau = u(t), \qquad y(0) = 2$$	5

$V_o(t)$

(b)	Find in the circuit in **Fig. 9** assuming zero initial conditions. Symbol ***u(t)*** denotes a unit step signal. 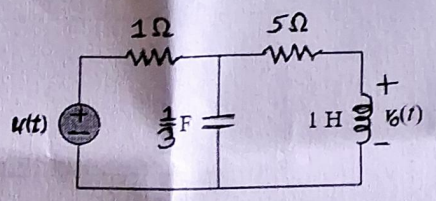 **Fig. 9**	5

*******END of Question Paper********

4/4