Mid Semester Examination 1

Mechanics of Machines

Max Time: 50 min | Max Marks: 15

1. Define the following terms:
   (a)Link (b) Kinematic chain (c) Closed Chain (d) Mechanism [4 X 0.5 = 2]
2. How do you classify kinematic pairs? Explain with examples [2]
3. Can helical pair and cylindrical pair be used in a planar mechanism? If yes or no, why? [2]
4. Show that, a constrained mechanism having all binary links cannot have an odd number of links. Also show that the simplest mechanism with all binary links has 4 links. [2]
5. An adjustable slider drive mechanism consists of a crank-slider with an adjustable pivot as shown in **Fig. Q5**, which can be moved up and down
   a. How many bodies (links) can be identified in this mechanism?
   b. Identify the type (and corresponding number) of all kinematic joints.
   c. What is the function of this mechanism and how will it be affected by moving the pivot point up and down? [3]

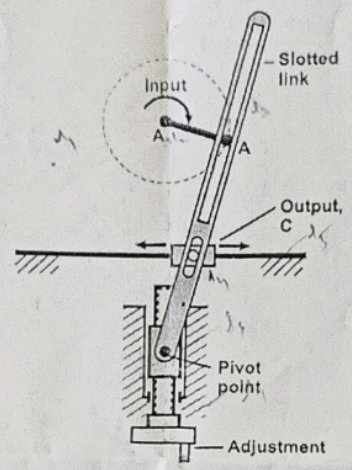

Fig. Q5

6. Determine the number of links and mobility for the machines shown below (**Fig. Q6**) [2]

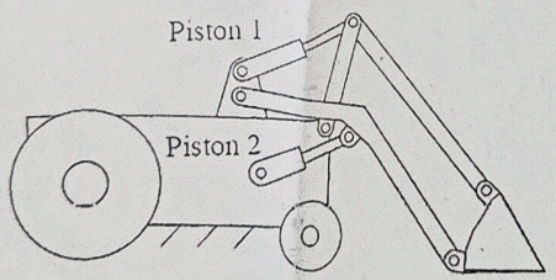

Fig. Q6

7. A rigid link PQ is undergoing plane motion as shown in the figure (V_P and V_Q are non-zero). V_{QP} is the relative velocity of point Q with respect to point P. Which one of the following is TRUE? [2]
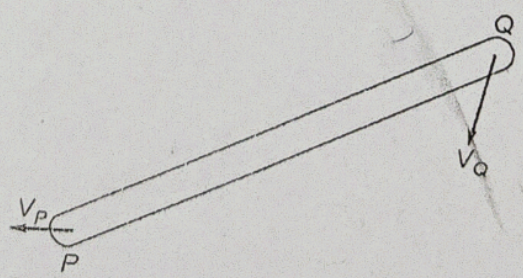
   a) V_{QP} has components along and perpendicular to PQ
   b) V_{QP}, has only one component directed from P to Q
   c) V_{QP} has only one component directed from Q to P
   d) V_{QP} has only one component perpendicular to PQ