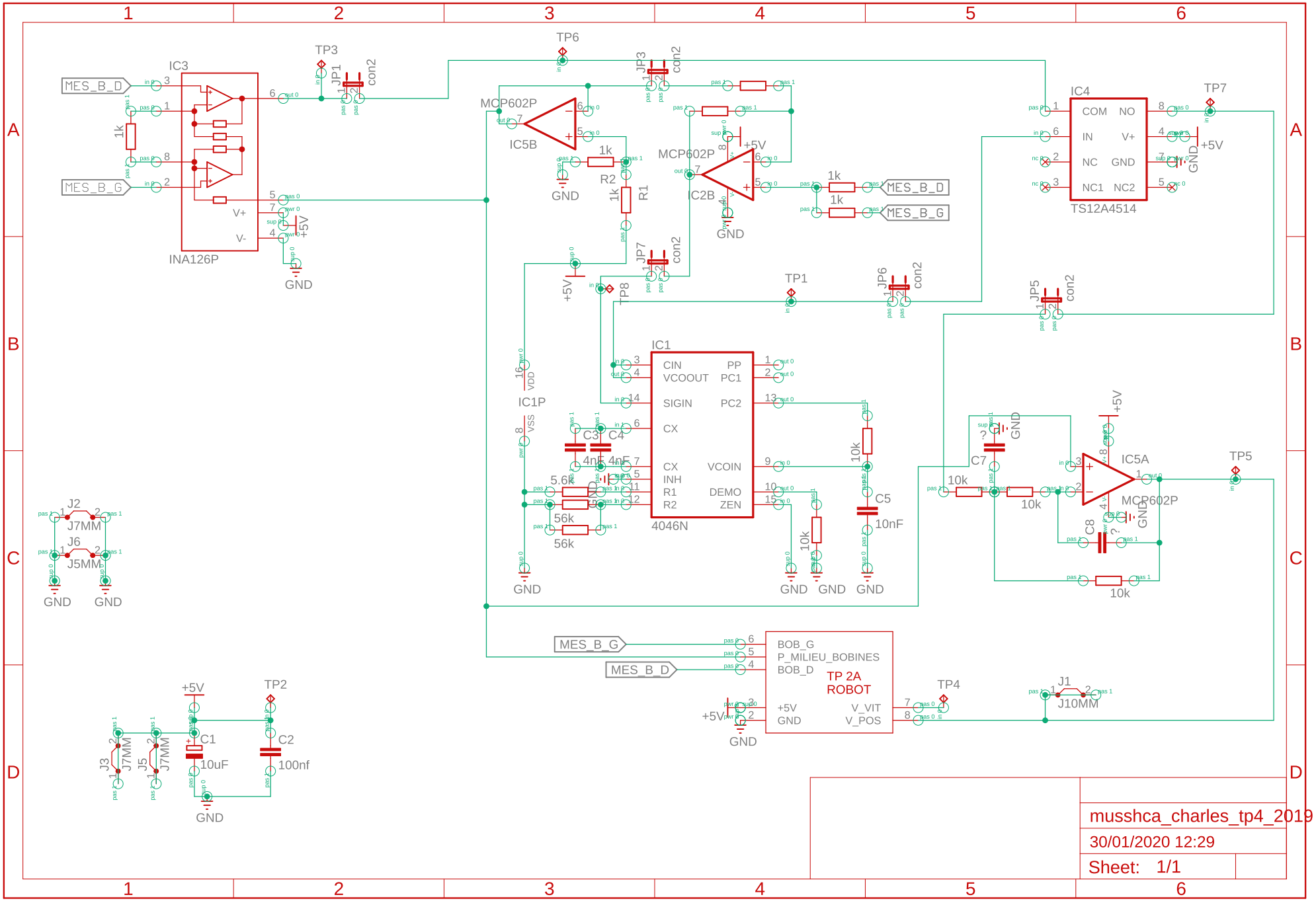
musshca_charles_tp4_2019
30/01/2020 12:29
Sheet: 1/1
IC3
INA126P
MES_B_D
MES_B_G
TP3
JP1
con2
TP6
JP3
MCP602P
IC5B
IC2B
R1
R2
1k
+5V
GND
IC4
TS12A4514
COM
NO
IN
V+
NC
GND
NC1
NC2
TP7
JP7
TP8
TP1
JP6
JP5
IC1
4046N
CIN
VCOUT
SIGIN
CX
INH
R1
R2
PP
PC1
PC2
VCOIN
DEMO
ZEN
IC1P
VDD
VSS
C3
C4
4nF
5.6k
56k
10k
C5
10nF
C7
C8
IC5A
TP5
J2
J7MM
J6
J5MM
J3
J5
C1
10uF
C2
100nf
TP2
BOB_G
P_MILIEU_BOBINES
BOB_D
TP 2A
ROBOT
V_VIT
V_POS
TP4
J1
J10MM