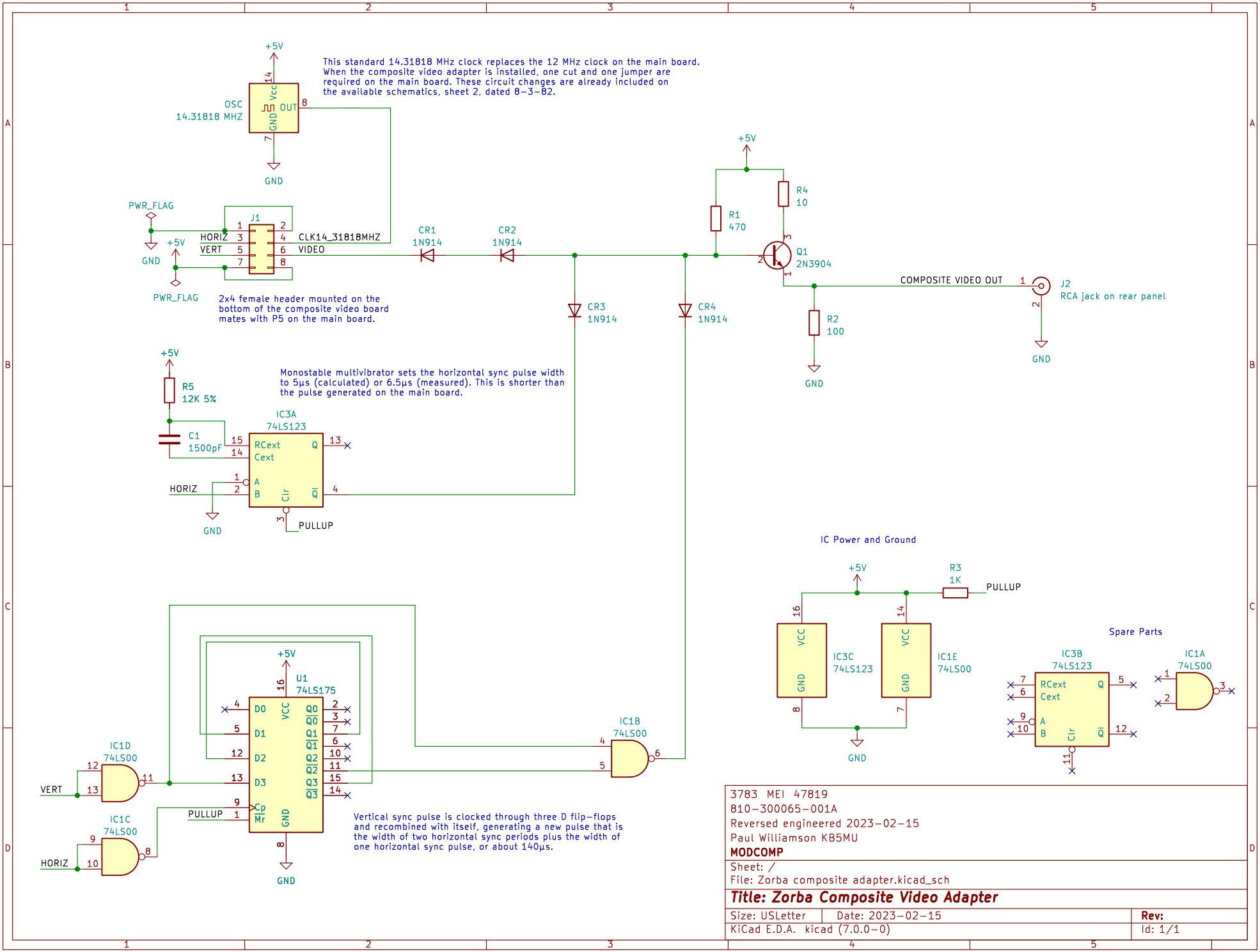

3783 MEI 47819
810-300065-001A
Reversed engineered 2023-02-15
Paul Williamson KB5MU
MODCOMP

Sheet: /
File: Zorba composite adapter.kicad_sch

Title: Zorba Composite Video Adapter

Size: USLetter	Date: 2023-02-15	Rev:
KiCad E.D.A. kicad (7.0.0-0)		Id: 1/1