System Block:

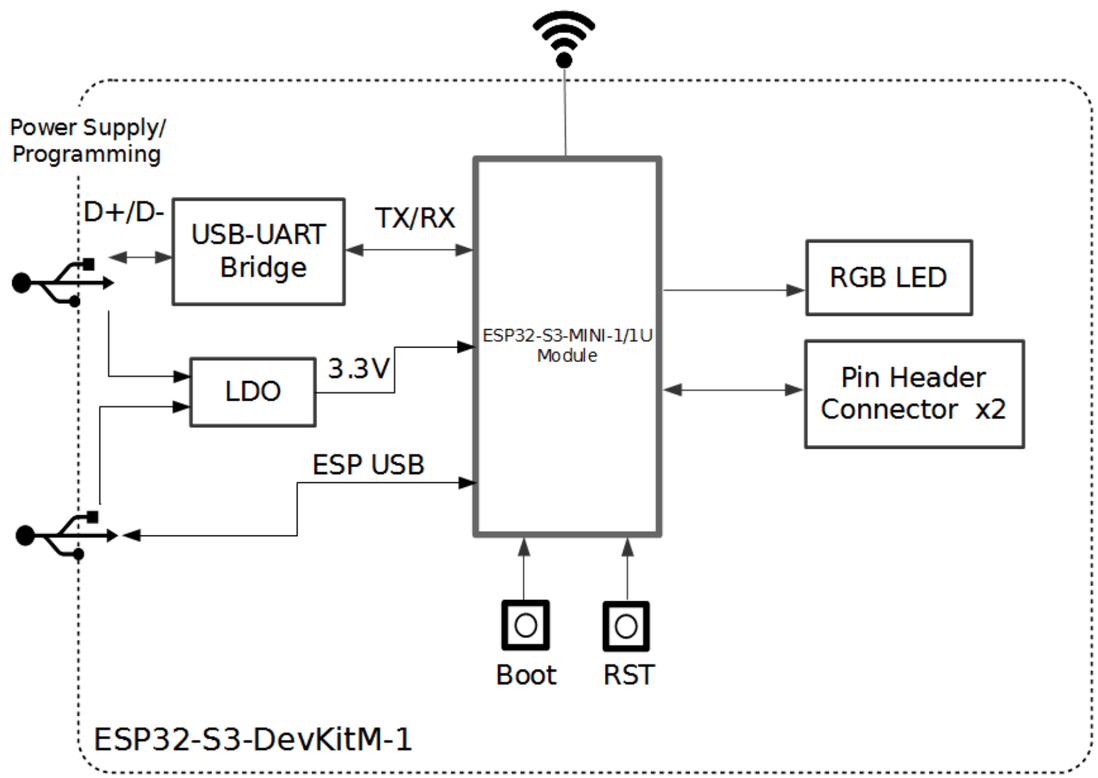

ESPRESSIF		
乐鑫信息科技（上海）股份有限公司		
Title	ESP32-S3-DevKitM-1	
Size C	Document Number <01_DesignBlock>	Rev V1.0
Date: Wednesday, March 10, 2021	Sheet 1 of 2	

USB to UART:

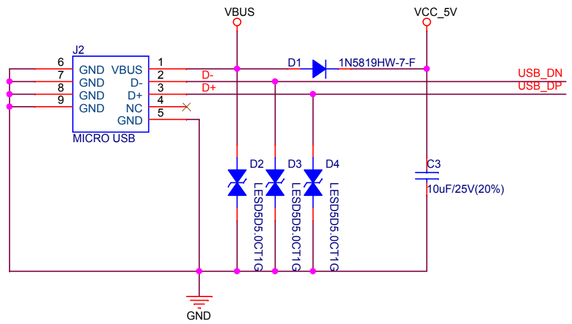

ESP USB:

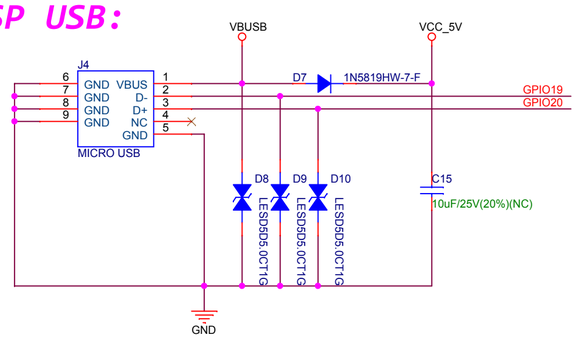

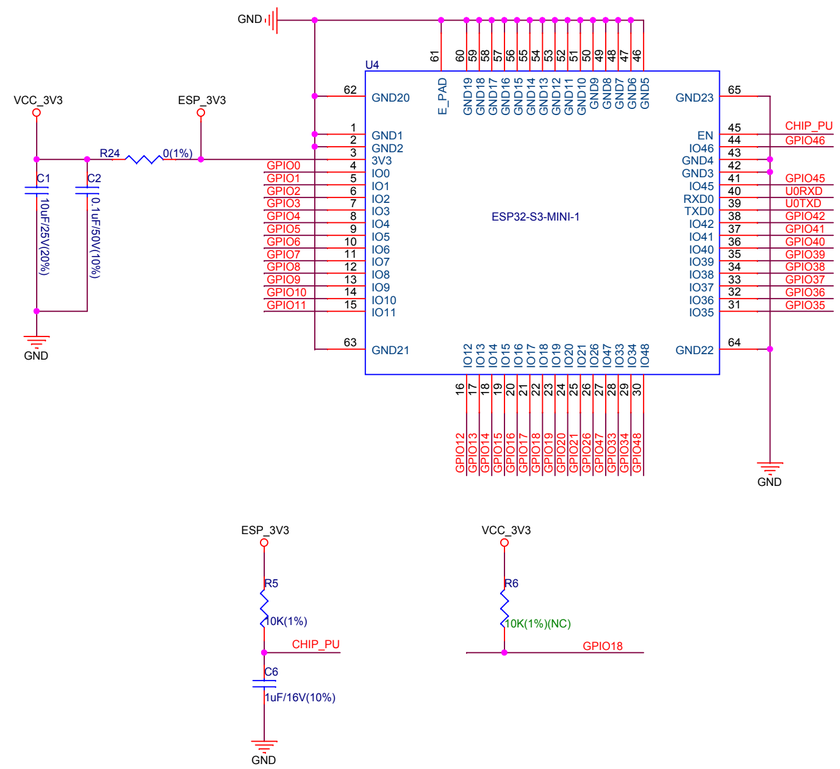

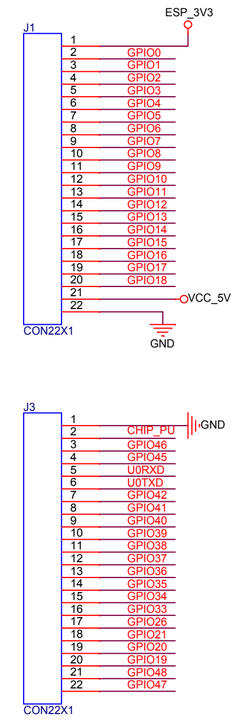

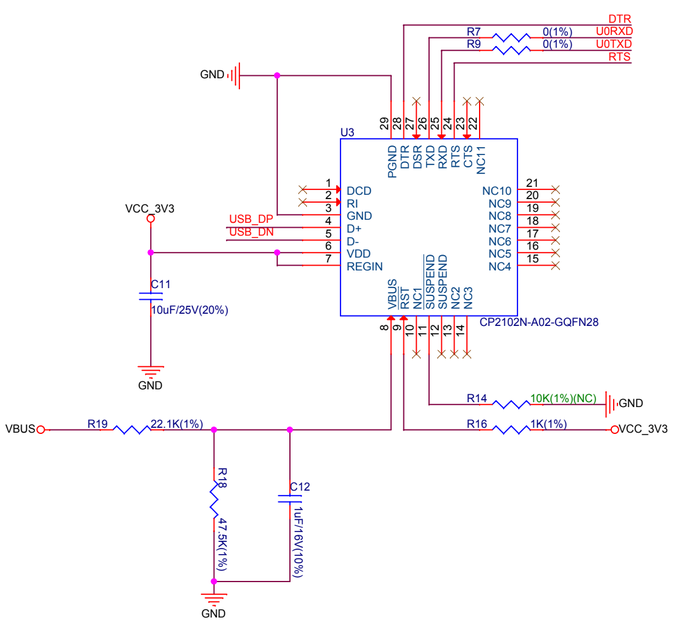

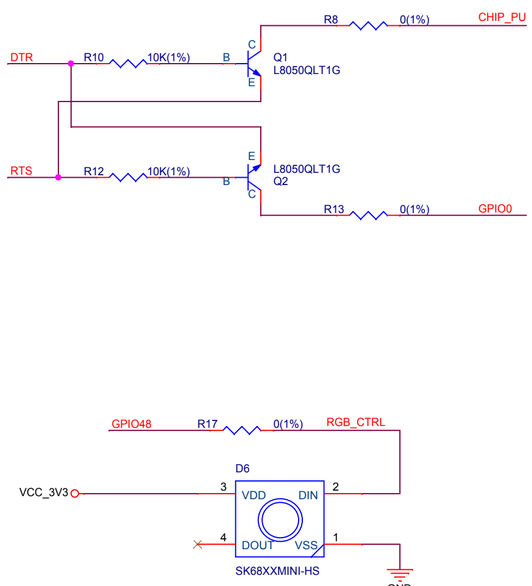

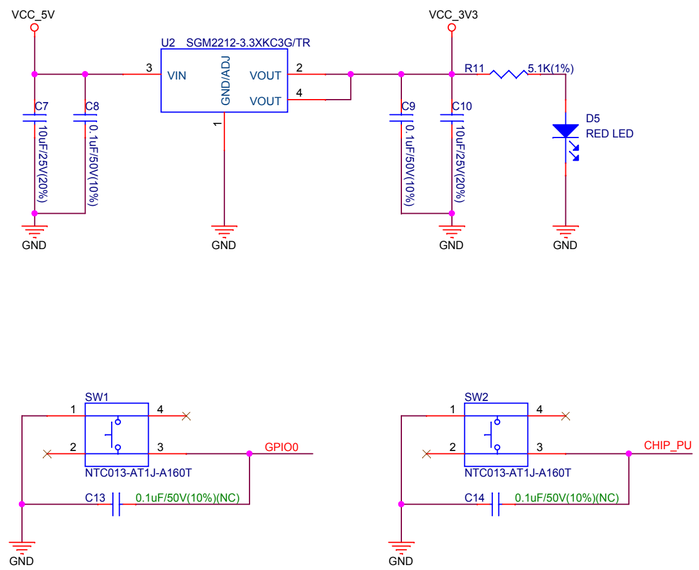

ESPRESSIF

乐鑫信息科技（上海）股份有限公司

Title		
	ESP32-S3-DevKitM-1	
Size	Document Number	Rev
C	02_ESP32-S3-DevKitM-1	V1.0
Date: Wednesday, March 10, 2021	Sheet 2 of 2	