Phase 5: Report submission for smart water management:

Introduction :

Introduction to smart water management app development project where the project is divided into 5 phases and it is the 5th phase and the first phase gives the general idea report of the project

2nd phase deals with the cost deals and setup ideas where 3rd phase deals with the circuit set up for collecting dataset and 5th is about the getting code for the app development

Project objectives:

Certainly, here are some potential project objectives for a smart water management app using IoT

Real-time Monitoring: Develop an app that can provide real-time monitoring of water consumption and quality using IoT sensors.

Water Conservation: Implement features to help users reduce water wastage through alerts and recommendations based on usage patterns.

Leak Detection: Create a system that can detect water leaks and notify users promptly to prevent water damage and wastage.

Remote Control: Enable users to remotely control water-related devices such as irrigation systems, faucets, and showers through the app.

Analytics and Insights: Provide data analytics and insights to help users make informed decisions about water usage and conservation.

Water Quality Analysis: Include sensors to monitor water quality and provide alerts if there are any issues with water contamination.

Mobile Alerts: Send mobile notifications to users for important events, such as excessive water use or system malfunctions.

Integration: Ensure compatibility with a variety of IoT devices and platforms, such as smart meters and environmental sensors.

User-Friendly Interface: Design an intuitive and user-friendly interface for easy app navigation and data visualization.

Scalability: Plan for the scalability of the system to accommodate a growing number of users and devices.

Sustainability: Promote water conservation and sustainability through educational content and tips within the app.

Cost Efficiency: Help users manage their water bills more efficiently by providing insights and cost-saving suggestions.

IoT devices:

Smart Water Meters: These IoT-enabled devices provide real-time data on water consumption, enabling accurate billing and usage monitoring. They can also help detect leaks and abnormal usage patterns.

Water Quality Sensors: IoT sensors that measure parameters like pH, turbidity, and the presence of contaminants to ensure water quality meets safety standards.

Leak Detection Sensors: These sensors can detect leaks in pipes, appliances, or infrastructure and send immediate alerts to prevent water wastage and damage.

Flow Control Valves: Smart valves that can remotely control water flow to specific areas or appliances, allowing for better management of water distribution and consumption.

Smart Irrigation Controllers: IoT-enabled controllers that adjust irrigation schedules based on real-time weather data and soil moisture levels, optimizing water usage in landscaping.

Water Level Sensors: Sensors used to monitor water levels in tanks, reservoirs, and water bodies, helping with resource management and preventing overflows or shortages.

Weather Stations: IoT weather stations provide real-time weather data, which is essential for making informed decisions about irrigation, water treatment, and distribution.

Water Pressure Sensors: These sensors monitor water pressure in the distribution system, helping to detect and address issues related to pressure fluctuations.

Water Purification and Treatment Monitors: IoT devices that monitor water treatment plants and processes, ensuring water quality and efficiency in treatment operations.IoT Cameras: Cameras placed at critical water infrastructure locations, such as dams, reservoirs, and treatment facilities, for visual monitoring, security, and anomaly detection.

Water Consumption Monitors: Devices that can be attached to individual water fixtures, like showers and faucets, to monitor and control water usage in real-time.

Water Level Alarms: These devices provide alerts when the water level in tanks or reservoirs reaches critical levels, preventing overflows or equipment damage.

Water Flow Sensors: IoT-enabled flow sensors that measure the rate of water flow in pipes

and can detect irregularities or blockages.

Smart Appliances: Modern appliances like dishwashers and washing machines with IoT capabilities can be integrated into water management systems, allowing users to schedule their operation during off-peak water usage times.

Devices setup:

a smart water management app involves several steps to ensure efficient data collection and control. Here's a general overview of the device setup process.

Selecting IoT Devices: Choose the appropriate IoT devices based on your project objectives, such as smart water meters, water quality sensors, leak detectors, and more.

IoT Platform Selection: Select an IoT platform or framework that supports the devices you've chosen. Popular platforms include AWS IoT, Google Cloud IoT, and Microsoft Azure IoT.

Device Configuration: Configure each IoT device according to its specifications. This may involve connecting the devices to your chosen IoT platform using APIs, SDKs, or device-specific configurations.

Network Connectivity: Ensure that the IoT devices have reliable network connectivity, whether through Wi-Fi, cellular, or other communication protocols. Install necessary hardware and software components for connectivity.

Data Transmission: Set up data transmission protocols to collect data from the IoT devices and send it to your central server or cloud-based platform. Ensure data security and encryption.

Data Storage: Design a data storage solution, typically in the cloud, to securely store the data collected from the devices. Consider using databases and data warehouses for efficient data management.

Data Processing and Analytics: Implement data processing and analytics pipelines to extract meaningful insights from the collected data. This may involve data cleansing, normalization, and analysis.

User Interface and App Development: Develop the user interface of your smart water management app, integrating the data from IoT devices. Ensure the app is user-friendly and provides real-time information.

Alerts and Notifications: Configure alerts and notifications within the app to inform users about critical events, such as leaks or abnormal water consumption.

Automation and Control: Implement control features in your app to allow users to remotely control IoT devices like valves, irrigation systems, or appliances.

Machine Learning and Predictive Maintenance: If applicable, use machine learning algorithms for predictive maintenance and optimization of water usage based on historical

data.

Scalability and Security: Ensure that the system is scalable to accommodate a growing number of devices and users. Implement robust security measures to protect the data and the system from cyber threats.

Testing and Quality Assurance: Rigorously test the setup to identify and resolve any issues or vulnerabilities. Test data accuracy, system reliability, and usability.Deployment and Maintenance: Deploy the system in the target environment (residential, commercial, or municipal). Establish a maintenance plan to ensure ongoing system functionality and updates.

Plateform development:

Developing a platform for a smart water management app using IoT involves creating a robust and scalable backend infrastructure to support the application. Here are the key steps to consider when developing the platform.

Define Requirements: Clearly define the requirements and objectives of the platform, including the supported IoT devices, features, and scalability needs.

Choose Technology Stack: Select the appropriate technology stack for the backend, including programming languages, databases, and cloud services. Common choices include Python, Node.js, databases like PostgreSQL or MongoDB, and cloud platforms like AWS, Google Cloud, or Azure.

Data Storage and Management: Set up a data storage solution for storing IoT data. Use databases to efficiently store and manage data, and consider time-series databases for time-sensitive data like water usage.

IoT Device Integration: Develop API endpoints or connectors to integrate with various IoT devices and data sources. This may involve using IoT protocols like MQTT or RESTful APIs.

Data Ingestion: Implement data ingestion mechanisms to collect data from IoT devices. Ensure data security, integrity, and real-time processing.

Data Processing and Analytics: Create data processing pipelines to clean, normalize, and analyze incoming data. Use analytics tools and algorithms to extract insights and patterns.

User Management: Implement user authentication and authorization mechanisms to secure user data and access to the platform.

Real-time Monitoring: Develop real-time monitoring features to display IoT data, such as water consumption, quality, and alerts, in the application.

Notifications and Alerts: Set up notification systems to alert users in real-time about important events, such as leaks or unusual water usage.

Remote Control: Enable users to control IoT devices remotely through the platform, such as turning off a valve or adjusting irrigation schedules.

Scalability: Design the platform with scalability in mind, ensuring it can handle a growing number of IoT devices and users. Consider microservices architecture for scalability.

Security: Implement robust security measures to protect user data, IoT device communication, and the platform itself. Use encryption, authentication, and authorization.

APIs and Web Services: Develop APIs and web services to allow third-party integration, such as mobile apps, other IoT platforms, or analytics tools.

Testing and Quality Assurance: Thoroughly test the platform to identify and address any bugs, security vulnerabilities, or performance issues.

Deployment and Maintenance: Deploy the platform in a production environment and establish a maintenance plan to ensure continuous operation and updates.

Documentation and Support: Provide comprehensive documentation for users and developers. Offer customer support to assist users with any issues.

Data Visualization and Reporting: Create data visualization tools and reporting features to help users understand their water usage and make informed decisions.

Compliance and Regulations: Ensure that the platform complies with relevant data privacy and security regulations, especially if handling sensitive user data.

Monitoring and Optimization: Implement monitoring tools to track the performance of the platform and optimize it for efficiency and cost-effectiveness.

Code implementation:

```
#Import necessary libraries

import time

import random

# Simulate IoT sensor data for water consumption

def generate_water_consumption_data():

 while True:

 # Generate random water consumption data (replace with actual sensor data)

 water_usage = random.uniform(0.1, 10.0) # Simulate usage in gallons

 timestamp = time.strftime("%Y-%m-%d %H:%M:%S")
```

```
 # Send data to a central server or cloud platform
 send_to_server(water_usage, timestamp)


 # Simulate data collection at regular intervals (e.g., every 15 minutes)
time.sleep(900)
# Send data to a central server or cloud platform (replace with actual server integration)
def send_to_server(water_usage, timestamp):
 print(f"Sent data to server - Water Usage: {water_usage} gallons, Timestamp: {timestamp}")
# Create a user interface (UI) for the app (basic text-based UI)
def main_menu():
 while True:
 print("Smart Water Management App")
 print("1. Real-time Water Consumption")
 print("2. Water Usage Reports")
 print("3. Exit")
 choice = input("Enter your choice: ")
 if choice == "1":
 real_time_water_consumption()
 elif choice == "2":
 water_usage_reports()
 elif choice == "3":
 break
 else:
 print("Invalid choice. Please try again.")
# Display real-time water consumption data
def real_time_water_consumption():
```

```
# Fetch and display real-time data (replace with actual data retrieval)
 print("Real-time Water Consumption Data")
 print("Water Usage: 2.5 gallons")
 print("Timestamp: 2023-11-01 14:30:00")
# Display water usage reports
def water_usage_reports():
 # Fetch and display historical data and reports (replace with actual data retrieval)
 print("Water Usage Reports")
 print("Monthly Water Usage Report")
 print("January 2023: 150 gallons")
 print("February 2023: 140 gallons")
 print("March 2023: 155 gallons")
if __name__ == "__main__":
 generate_water_consumption_data()
 main_menu()
```

Setup configuration:

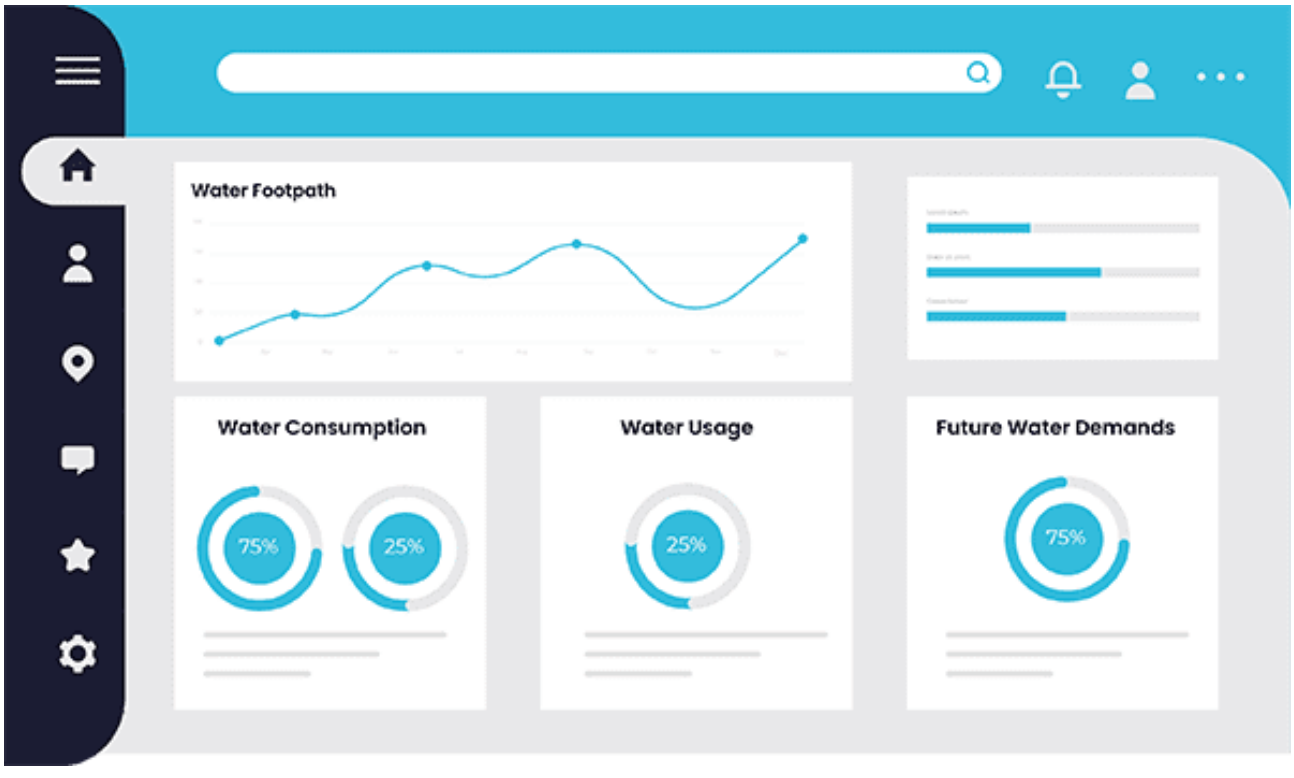

Circuit diagram:

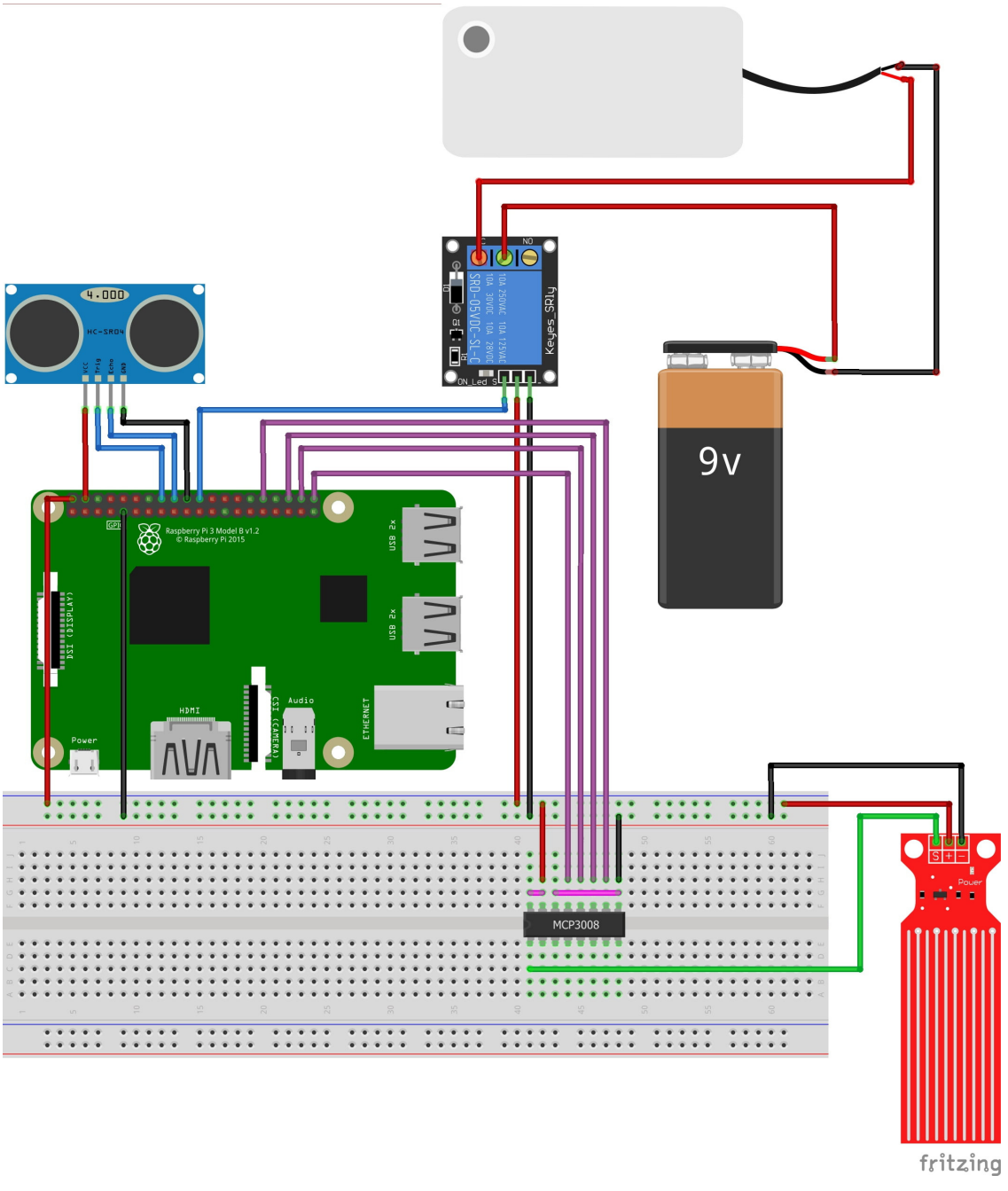

Project overview :

- **Phase 1: Project Inception - General Idea Report**
  - In this initial phase, the project team focuses on defining the project's scope, objectives, and general concept. Key activities include:
    - Conducting a project kickoff meeting to align team members and stakeholders.
    - Defining the primary project goals, such as optimizing water resource usage, detecting leaks, and promoting water conservation.
    - Drafting a project proposal and feasibility study to gain approval and secure funding.
    - Identifying the target areas for water management and potential user communities.

        - Outlining the high-level features and functionalities of the smart water management app.Setting initial project milestones and timelines.
- **Phase 2: Cost Estimation and Setup Planning**
    - In the second phase, the focus is on the financial aspects and the logistical setup required for the project. Key activities include:
        - Performing a detailed cost estimation, including hardware (sensors, controllers), cloud services, development resources, and ongoing maintenance expenses.
        - Securing the necessary funding or budget approvals for the project
        - .Identifying and procuring the required hardware components, including water sensors, IoT controllers, and communication modules.
        - Setting up the technical infrastructure for data collection, storage, and processing.
        - Drafting a project plan that outlines the cost breakdown and logistics for the entire project.
- **Phase 3: Sensor Deployment and Data Collection Setup**
    - The third phase is centered around deploying sensors and setting up data collection systems. Key activities include:
        - Designing the deployment strategy for water sensors and controllers in specific locations.
        - Assembling and installing the sensor arrays to monitor water usage, quality, and leakage.
        - Implementing data transmission protocols to ensure real-time data is collected from the sensors and sent to the central database.
        - Testing the sensor circuitry and data collection to ensure they are functioning correctly.
- **Phase 4: App Development and Code Implementation**
    - In the fourth phase, the project shifts its focus to app development and coding for data processing and presentation. Key activities include:
        - Developing the smart water management app for mobile platforms (e.g., Android and iOS) using the selected programming languages and frameworks.
        - Writing code to collect, transmit, and process sensor data from the deployed devices.
        - Creating user-friendly interfaces for the app to visualize real-time water data, usage trends, and alerts.
        - Implementing alert mechanisms to notify users of anomalies, leaks, or excessive water consumption.
        - Conducting thorough testing and debugging of the app code to ensure it functions correctly and reliably.
- **Phase 5: Testing, Deployment, and Maintenance**
    - In the fifth and final phase, the project transitions to testing, deployment, and ongoing maintenance. Key activities include:
        - Conducting comprehensive testing of the entire system, including the app, sensor data, and alerts.
        - Resolving any issues, bugs, or performance bottlenecks identified during testing.
        - Deploying the sensors and controllers in targeted areas and making the app available to users.
        - Establishing user training programs and ongoing support channels.
        - Developing a maintenance plan to ensure the long-term reliability of the system.

    - Implementing continuous data monitoring and analysis to provide valuable insights to users and water management authorities.
    - Remaining adaptable to changes in water usage patterns and user needs.

This phased approach ensures that the smart water management app development project progresses methodically, from conceptualization to deployment and maintenance. It helps keep the project on track and ensures that it aligns with its initial goals and objectives.

Conclusion:

In conclusion, the structured five-phase approach for the smart water management app development project provides a clear roadmap for achieving the project's objectives. Each phase serves a vital role in the project's lifecycle, guiding it from concept to deployment, and ensuring the long-term success of the smart water management system. Here are some key takeaways:

- **Project Clarity:**
    - Phase 1 sets the foundation by defining the project's goals, scope, and objectives, providing a clear roadmap for the project team and stakeholders.
- **Financial Preparedness:**
    - Phase 2 ensures the project is financially sound by estimating costs and securing funding, enabling seamless execution without budget constraints.
- **Hardware Setup:**
    - Phase 3 focuses on setting up the necessary hardware and sensors to collect and transmit data, providing the foundation for accurate and real-time data acquisition.
- **Software Development:**
    - Phase 4 is dedicated to app development and coding, delivering the software infrastructure for data processing, visualization, and user interaction.
- **Testing and Deployment:**
    - The final phase, Phase 5, underscores the importance of rigorous testing, deployment, and ongoing maintenance, ensuring the system's reliability and effectiveness.

This structured approach helps manage the project's complexity, minimizes potential issues, and contributes to the success of a smart water management app that optimizes water resources, detects issues, and promotes water conservation. The project's long-term success depends on careful planning, execution, and continuous adaptation to changing conditions and user requirements. It is not only a technology solution but a valuable tool for water resource management and environmental sustainability.