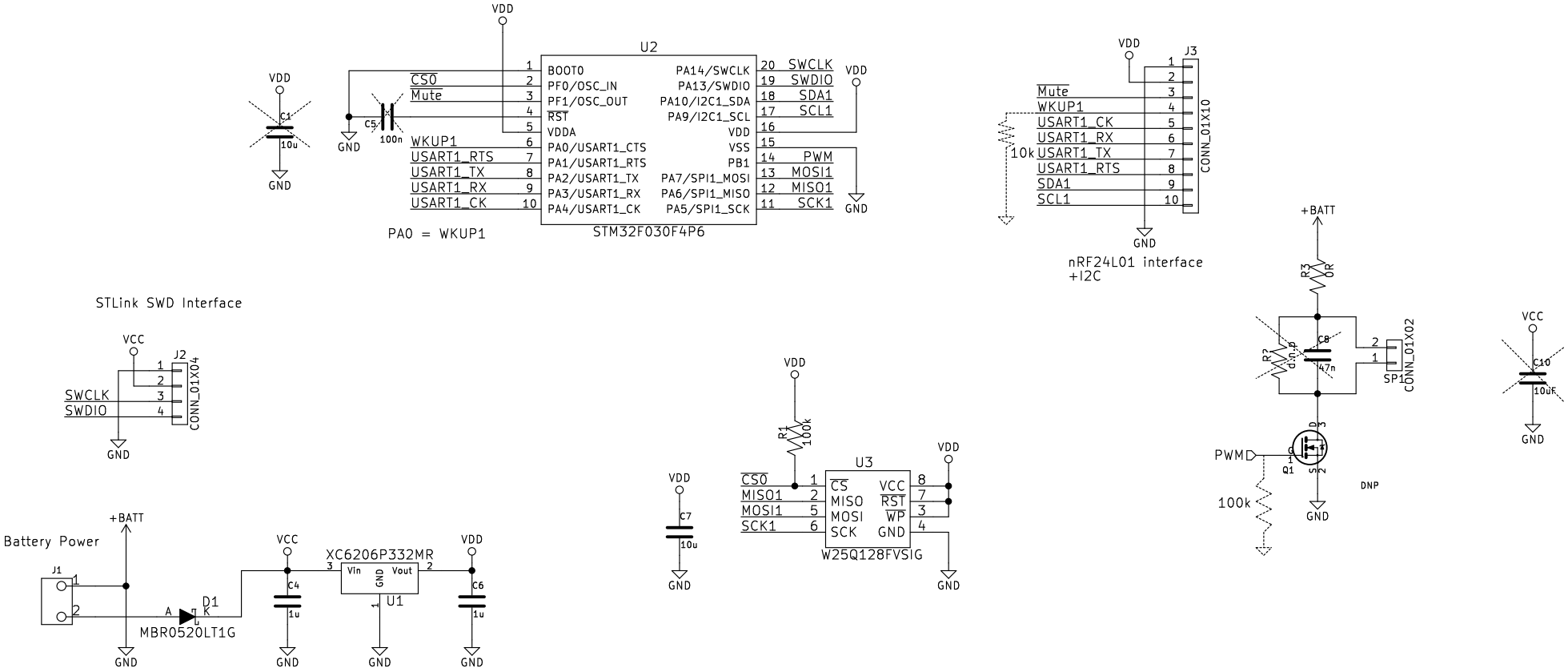

Maurits van de Lande (maurits@vandelande.com)

Sheet: /
File: Toy-Audio.sch

Title: Toy Audio V1

Size: A4	Date: 2016-02-07	**Rev: A.1**
KiCad E.D.A. kicad 4.0.1-stable		Id: 1/1