01_Revision_History.SchDoc

Index

Page	Schematics Page Name
01	Revision History
02	OCDS
03	Power_a_Connector
04	04_TC4xx_Supply_Clk_Cfg_Dbg
05	Ports
06	Ethernet_Memory_Expansion
07	HighSpeed_Peripherals

Revision History

Rev.	Rel.	Date	Author	Description	Page(s)
V1.0		03/2023	KOMMA.	First new design for TC4x7	07
V2.0		05/07/2024	CHETHAN	Fix for Reset, FRAM & Slikscreen. Added 5V LED	07

KIT_A3G_TC4D7_LITE_V02
630-60744-01

LEGAL DISCLAIMER
THE INFORMATION GIVEN IN THIS DOCUMENT IS GIVEN FOR ILLUSTRATING PURPOSES ONLY. THE RECIPIENT OF THIS DOCUMENT MUST VERIFY ANY FUNCTION DESCRIBED HEREIN IN THE REAL APPLICATION. INFINEON TECHNOLOGIES HEREBY DISCLAIMS ANY AND ALL WARRANTIES AND LIABILITIES OF ANY KIND (INCLUDING WITHOUT LIMITATION WARRANTIES OF NON-INFRINGEMENT OF INTELLECTUAL PROPERTY RIGHTS OF ANY THIRD PARTY) WITH RESPECT TO ANY AND ALL INFORMATION GIVEN IN THIS DOCUMENT.

02_OCDS.SchDoc

OCDS

USB Type-C Connector

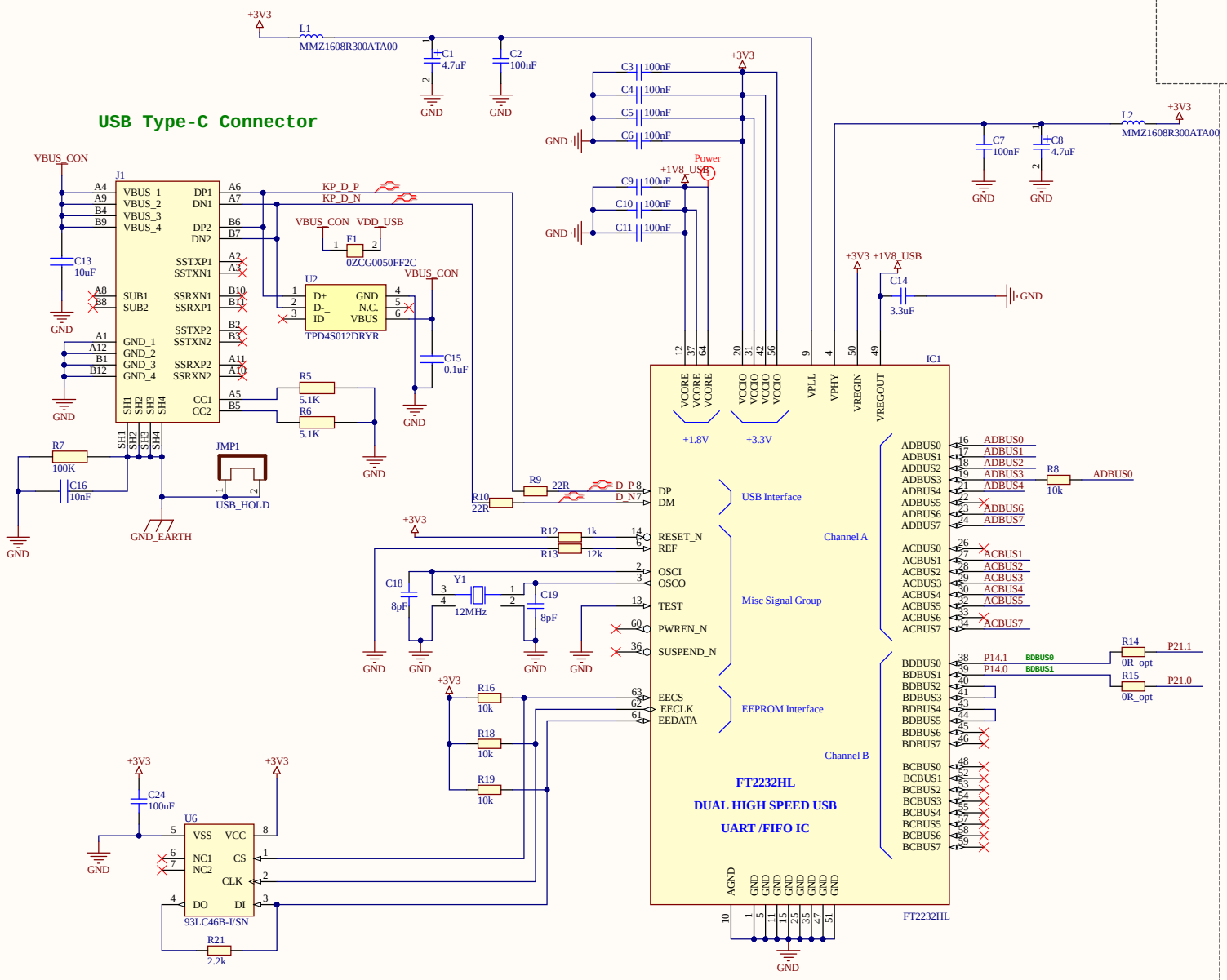

LEDs of OCDS

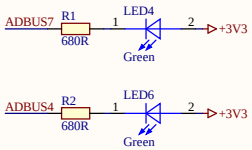

Signal Network Switches

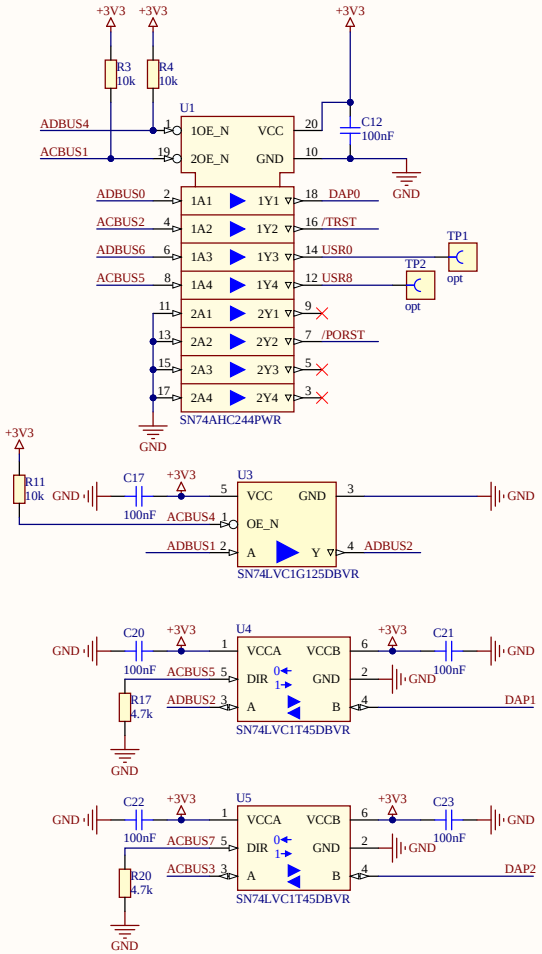

Title: KIT_A3G_TC4D7_LITE_V02			
Document Number: 630-60744-01		Approved CHETHAN	
Size: A3	Document Name 02_OCDS.SchDoc	Rel. RASB	Rev. 02
Author: CHETHAN			
Date: 05-07-2024 Time: 03:33:55 PM		SVN Revision: Not in version control	
		Sheet 2 of 7	

03_Power_a_Connector.SchDoc

Arduino Connector & X1/X2

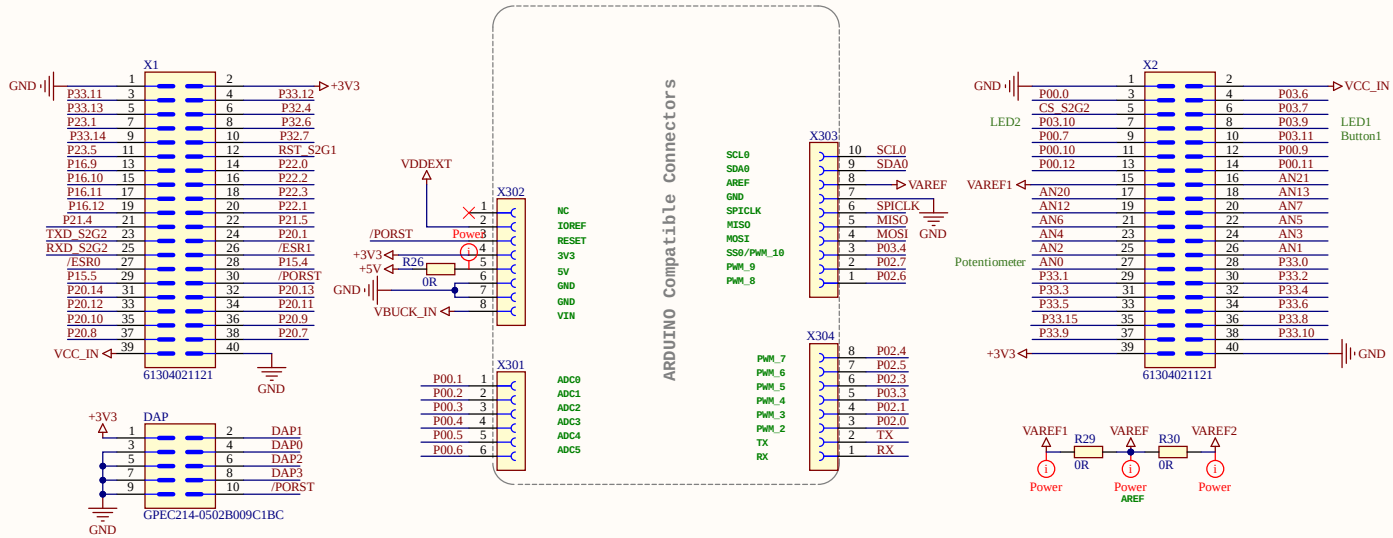

Buttons & LEDs

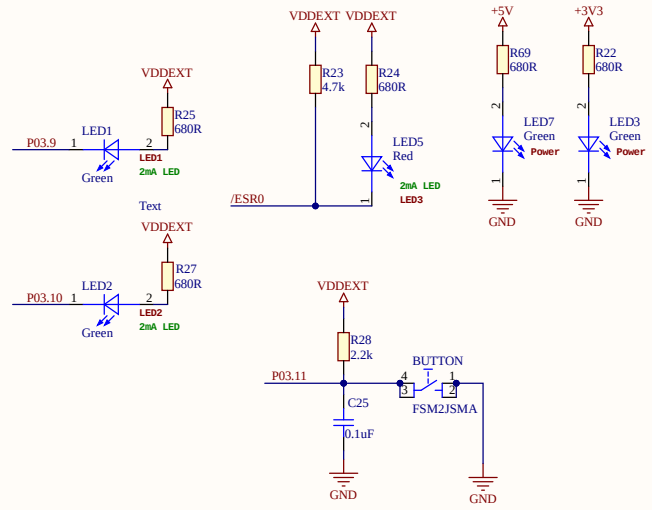

Power

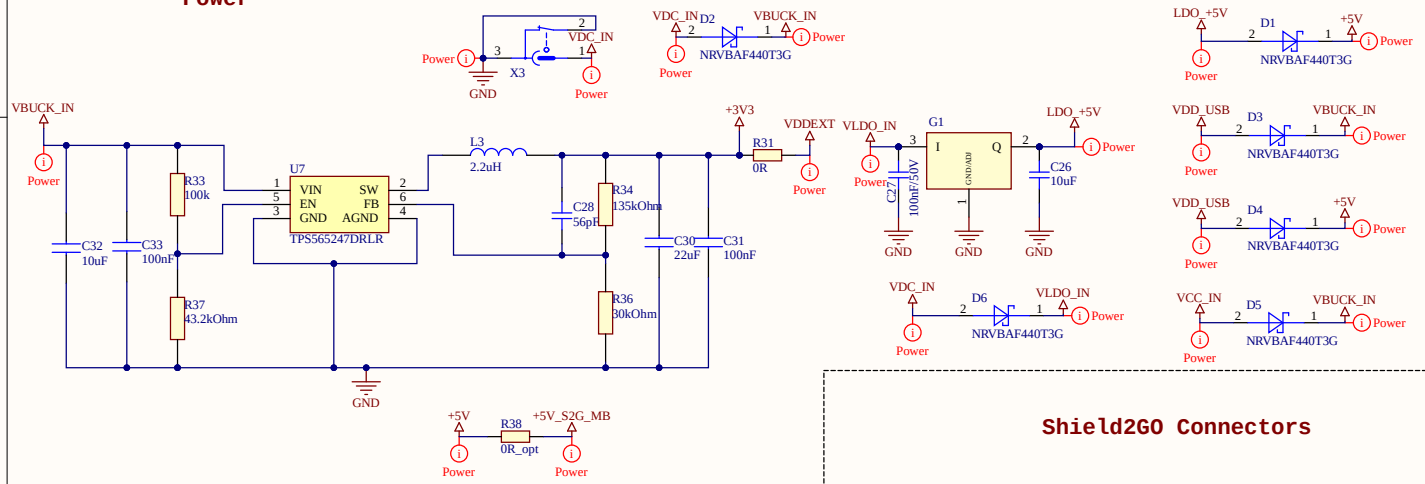

Potentiometer

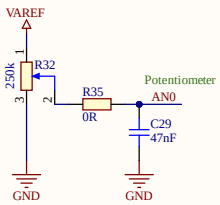

Mikrobus

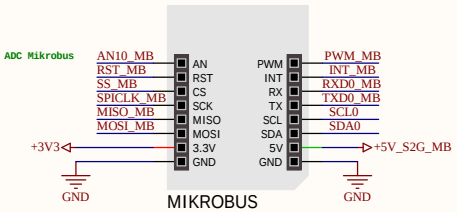

Shield2GO Connectors

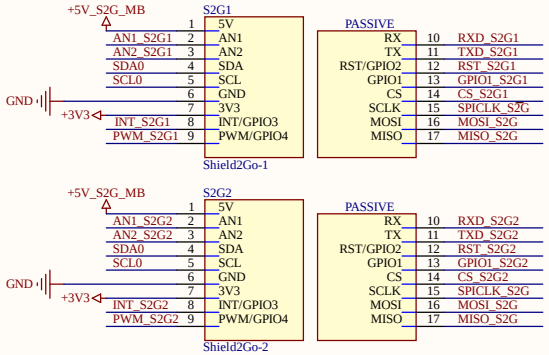

Title: KIT_A3G_TC4D7_LITE_V02			
Document Number: 630-60744-01		Approved CHETHAN	
Size: A3	Document Name 03_Power_a_Connector.SchDoc	Rel. RASB	Rev. 02
Author: CHETHAN			
Date: 05-07-2024 Time: 03:33:56 PM		SVN Revision: Not in version control	
		Sheet 3 of 7	

04_TC4xx_Supply_Clk_Cfg_Dbg.SchDoc

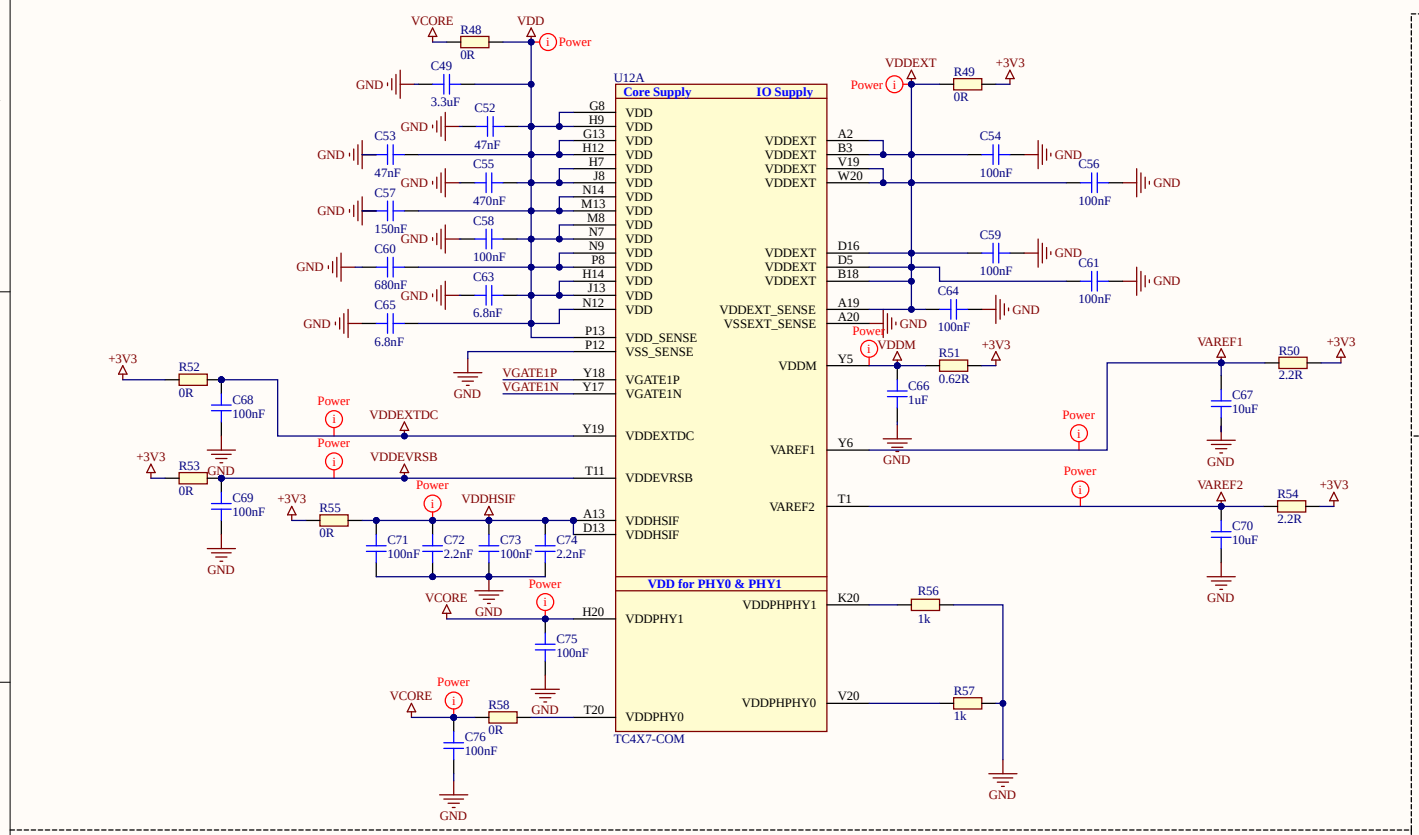

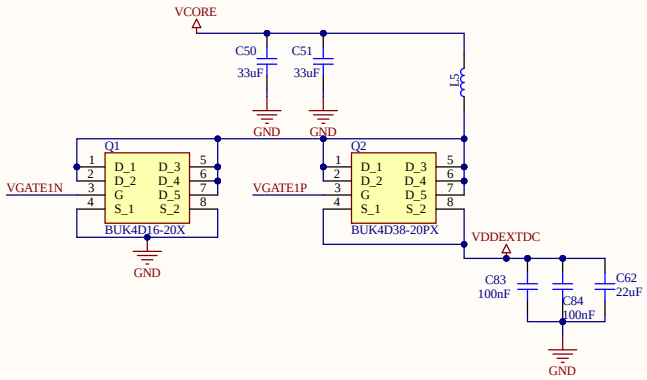

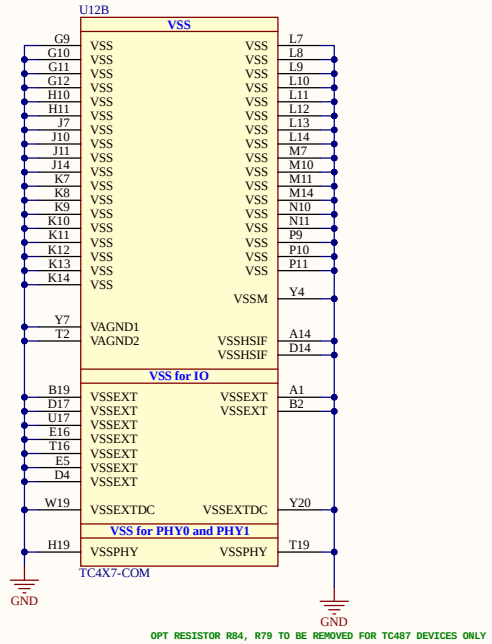

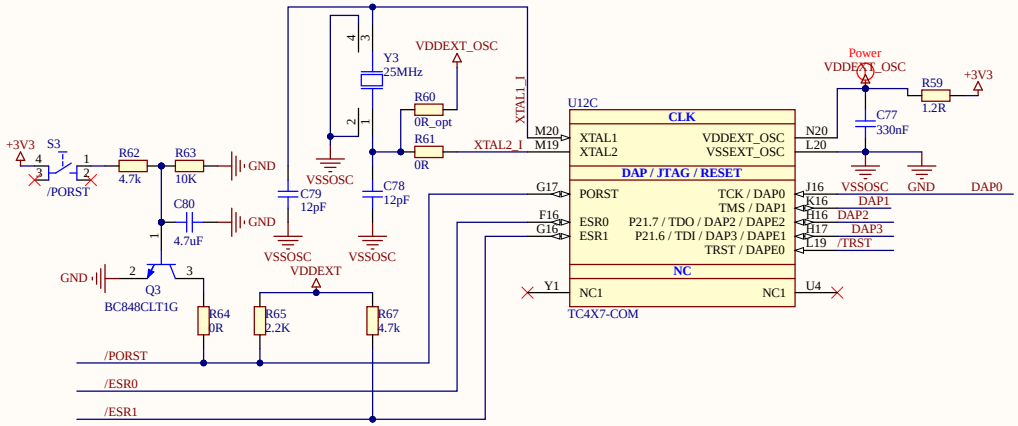

Title: KIT_A3G_TC4D7_LITE_V02			
Document Number: 630-60744-01		Approved CHETHAN	
Size: A3	Document Name 04_TC4xx_Supply_Clk_Cfg_Dbg.SchDoc	Rel. RASB	Rev. 02
Author: CHETHAN			
Date: 05-07-2024 Time: 03:33:56 PM	SVN Revision: Not in version control		
		Sheet 4	of 7

05_PORTS.SchDoc

Analog Circuit of AURIX

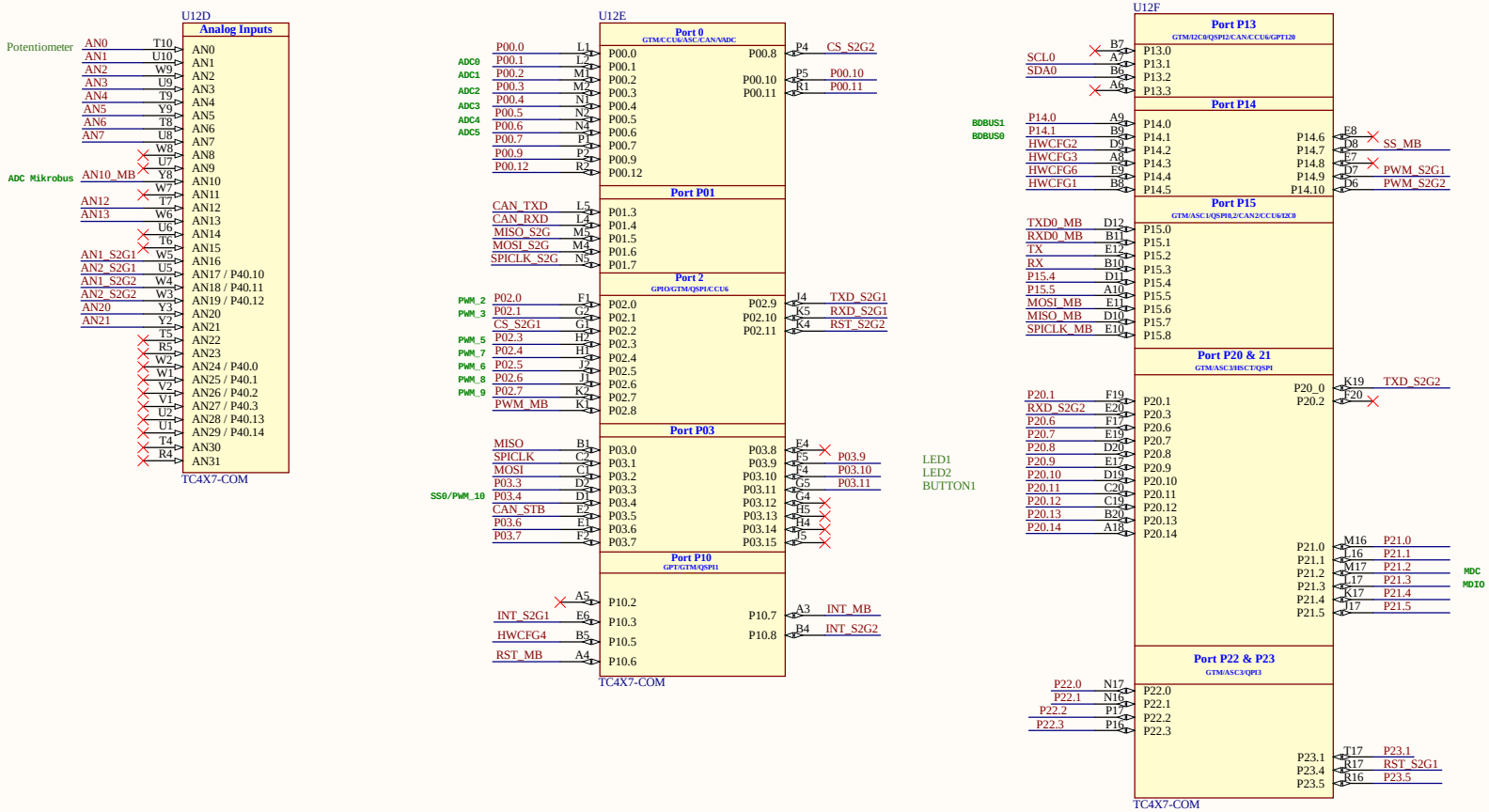

Title:	KIT_A3G_TC4D7_LITE_V02
Document Number:	630-60744-01
Approved	CHETHAN
Size:	A3
Document Name	05_PORTS.SchDoc
Rel.	RASB
Rev.	02
Author:	CHETHAN
Date:	05-07-2024
Time:	03:33:56 PM
SVN Revision:	Not in version control
Sheet	5 of 7

06_Ethernet_Memory_Expansion.SchDoc

I2C Eeprom with unique MAC ID

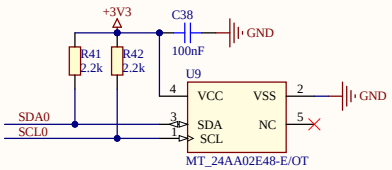

10/100 Base-T Ethernet

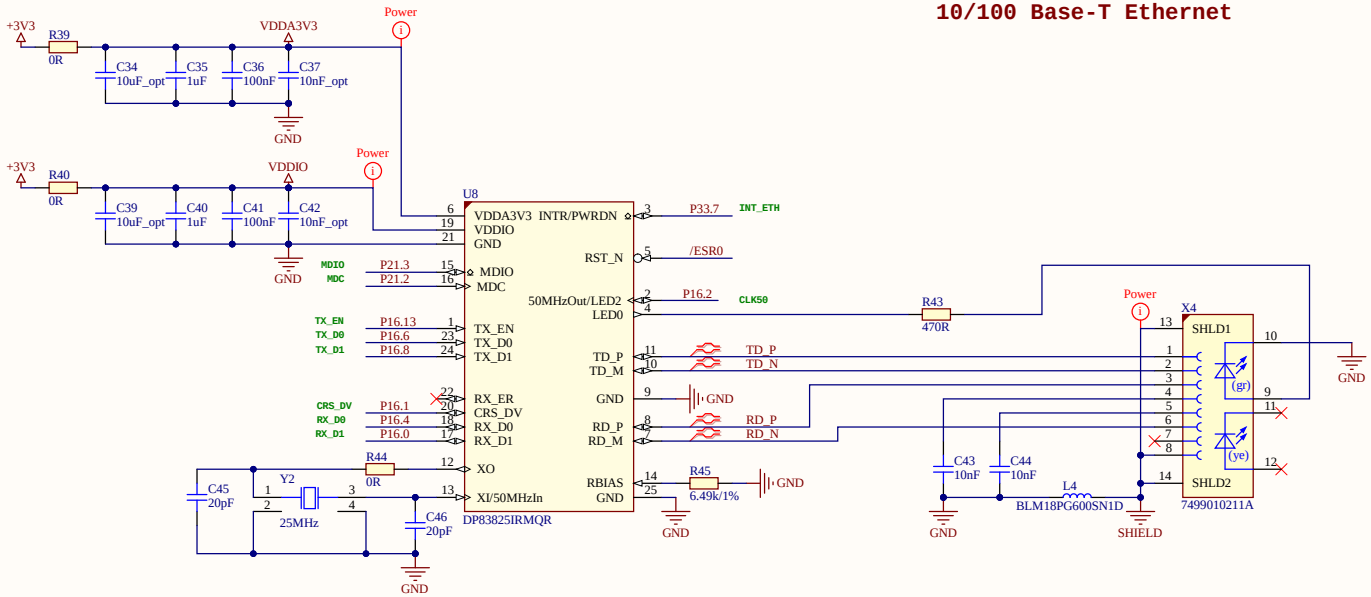

External serial flash

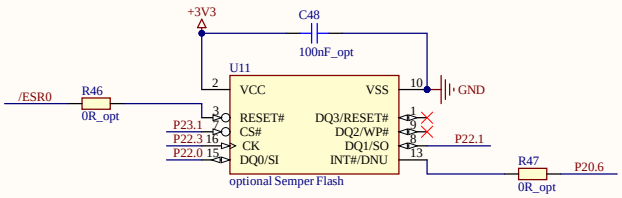

External serial ram

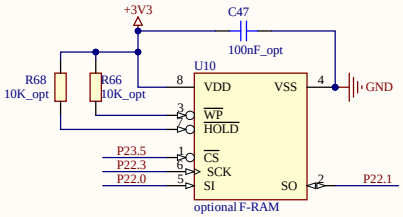

Title: KIT_A3G_TC4D7_LITE_V02			
Document Number: 630-60744-01		Approved CHETHAN	
Size: A3	Document Name 06_Ethernet_Memory_Expansion.SchDoc	Rel. RASB	Rev. 02
Author: CHETHAN			
Date: 05-07-2024 Time: 03:33:56 PM	SVN Revision: Not in version control		
		Sheet 6 of 7	

07_HighSpeed_Peripherals.SchDoc

CAN Tranceiver

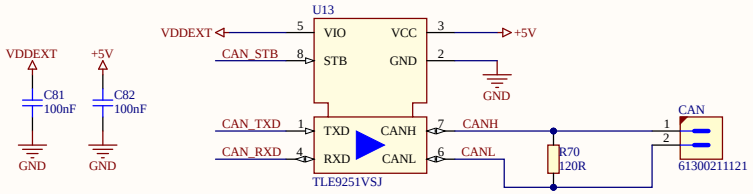

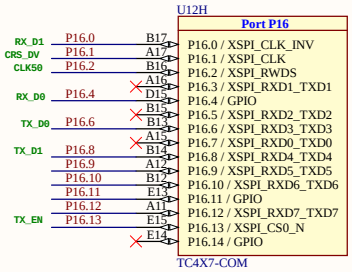

HW Config

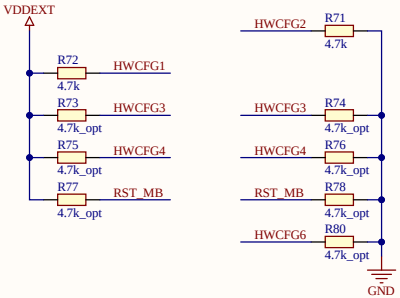

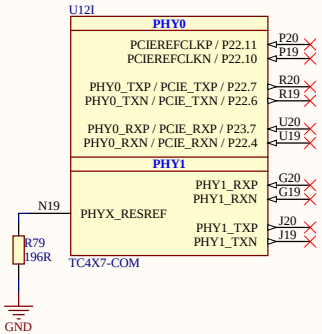

Title: KIT_A3G_TC4D7_LITE_V02			
Document Number: 630-60744-01		Approved CHETHAN	
Size: A3	Document Name 07_HighSpeed_Peripherals.SchDoc	Rel. RASB	Rev. 02
Author: CHETHAN			
Date: 05-07-2024 Time: 03:33:57 PM	SVN Revision: Not in version control		
		Sheet 7 of 7	