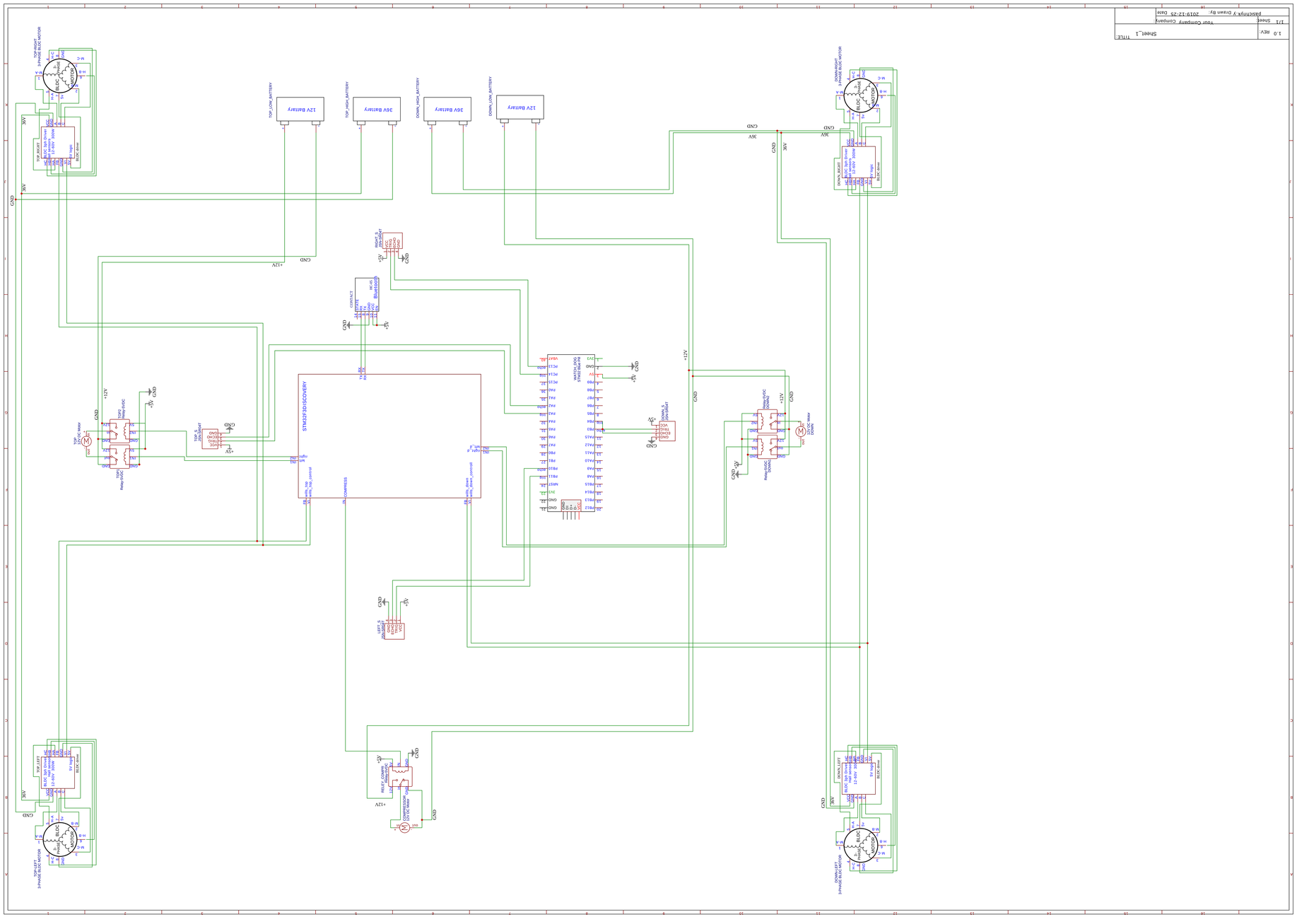
TITLE
Sheet_1
REV
1.0
Sheet
1/1
Your Company Company
Drawn By
pascunya-y
Date
2019-12-25
TOP_LOW_BATTERY
12V Battery
TOP_HIGH_BATTERY
36V Battery
DOWN_HIGH_BATTERY
36V Battery
DOWN_LOW_BATTERY
12V Battery
TOP_RIGHT
3-PHASE BLDC MOTOR
TOP_RIGHT
BLDC 3ph Driver
12-48V 300W
BLDC Motor
TOP_LEFT
3-PHASE BLDC MOTOR
TOP_LEFT
BLDC 3ph Driver
12-48V 300W
BLDC Motor
DOWN_RIGHT
3-PHASE BLDC MOTOR
DOWN_RIGHT
BLDC 3ph Driver
12-48V 300W
BLDC Motor
DOWN_LEFT
3-PHASE BLDC MOTOR
DOWN_LEFT
BLDC 3ph Driver
12-48V 300W
BLDC Motor
TOP
12V DC Motor
TOP
Relay-5VDC
TOP_S
20A/50A/SHUNT
DOWN
12V DC Motor
DOWN
Relay-5VDC
DOWN_S
20A/50A/SHUNT
STM32F3DISCOVERY
PA9
PA10
PA11
PA12
PA13
PA14
PA15
PB3
PB4
PB5
PB6
PB7
PB8
PB9
PB10
PB11
PB12
PB13
PB14
PB15
PC13
PC14
PC15
PF0
PF1
NRST
PA0
PA1
PA2
PA3
PA4
PA5
PA6
PA7
PB0
PB1
PB2
PB10
PB11
PB12
PB13
PB14
PB15
PC6
PC7
PC8
PC9
PA8
PA9
PA10
PA11
PA12
PA13
PA14
PA15
PB3
PB4
PB5
PB6
PB7
PB8
PB9
PC10
PC11
PC12
PD2
VBAT
3V3
5V
GND
GND
GND
3V3
GND
GND
GND