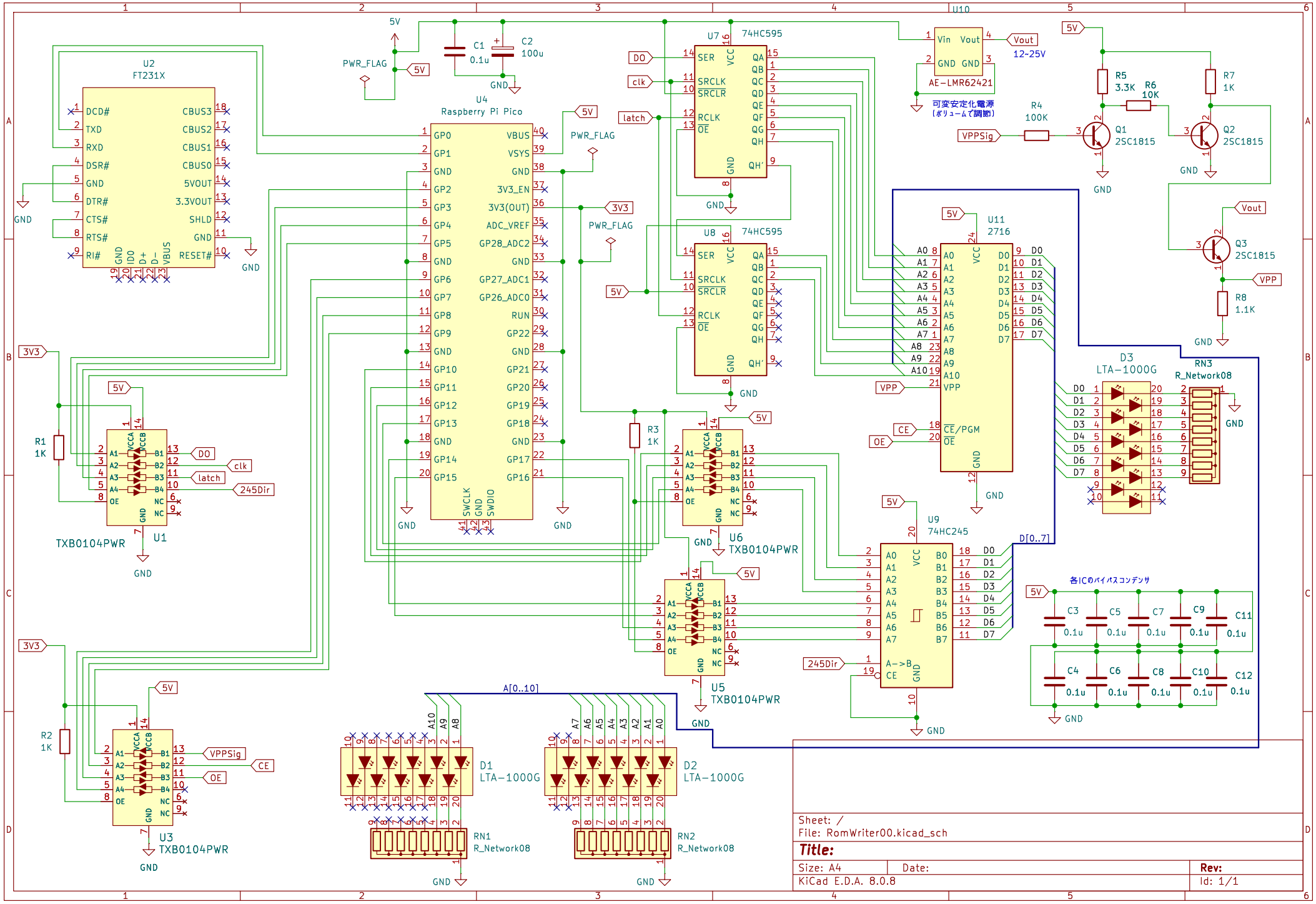
U2
FT231X
U4
Raspberry Pi Pico
U7
74HC595
U8
74HC595
U10
AE-LMR62421
可変安定化電源
(ボリュームで調節)
Vout
12~25V
U11
2716
U9
74HC245
U1
TXB0104PWR
U3
TXB0104PWR
U5
TXB0104PWR
U6
TXB0104PWR
D1
LTA-1000G
D2
LTA-1000G
D3
LTA-1000G
RN1
R_Network08
RN2
R_Network08
RN3
R_Network08
Q1
2SC1815
Q2
2SC1815
Q3
2SC1815
各ICのバイパスコンデンサ
A[0..10]
D[0..7]
Sheet: /
File: RomWriter00.kicad_sch
Title:
Size: A4
Date:
Rev:
KiCad E.D.A. 8.0.8
Id: 1/1