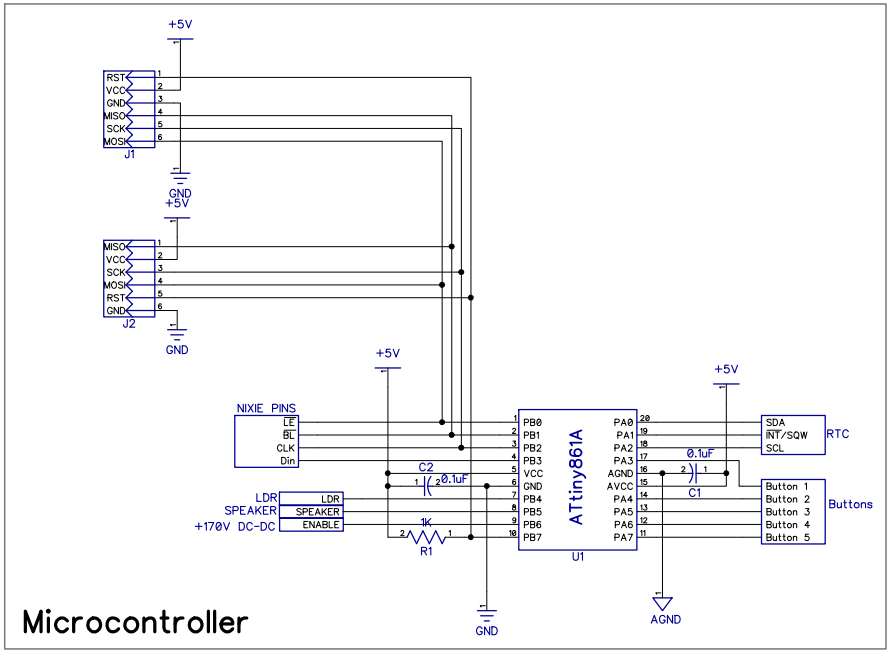
+5V
RST
VCC
GND
MISO
SCK
MOSI
J1
GND
+5V
MISO
VCC
SCK
MOSI
RST
GND
J2
GND
+5V
NIXIE PINS
LE
BL
CLK
Din
C2
0.1uF
LDR
SPEAKER
+170V DC-DC
LDR
SPEAKER
ENABLE
1K
R1
PB0
PB1
PB2
PB3
VCC
GND
PB4
PB5
PB6
PB7
ATtiny861A
U1
PA0
PA1
PA2
PA3
AGND
AVCC
PA4
PA5
PA6
PA7
+5V
0.1uF
C1
SDA
INT/SQW
SCL
RTC
Button 1
Button 2
Button 3
Button 4
Button 5
Buttons
GND
AGND
Microcontroller

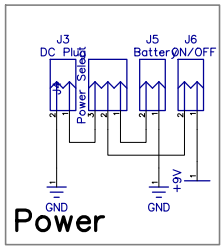
J3
DC Plug
Power Select
J5
Battery
J6
ON/OFF
GND
GND
+9V
Power

AGND
GND
Ground

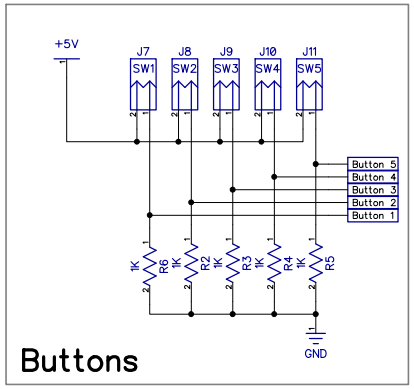
+5V
J7
J8
J9
J10
J11
SW1
SW2
SW3
SW4
SW5
Button 5
Button 4
Button 3
Button 2
Button 1
1K
R6
R2
R3
R4
R5
GND
Buttons

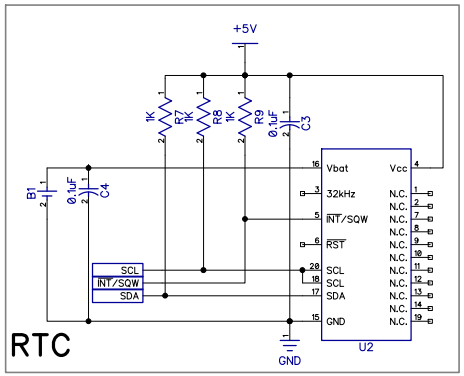
+5V
1K
R7
1K
R8
1K
R9
0.1uF
C3
B1
0.1uF
C4
SCL
INT/SQW
SDA
Vbat
32kHz
INT/SQW
RST
SCL
SCL
SDA
GND
Vcc
N.C.
U2
GND
RTC

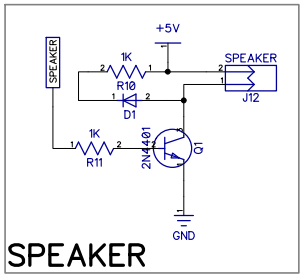
+5V
SPEAKER
1K
R10
D1
SPEAKER
J12
1K
R11
2N4401
Q1
GND
SPEAKER

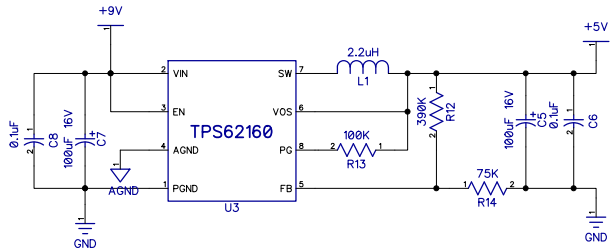
+9V
+5V
VIN
EN
AGND
PGND
SW
VOS
PG
FB
TPS62160
U3
2.2uH
L1
100K
R13
390K
R12
75K
R14
0.1uF
C8
100uF 16V
C7
AGND
GND
100uF 16V
C5
0.1uF
C6
GND

+5V DC-DC

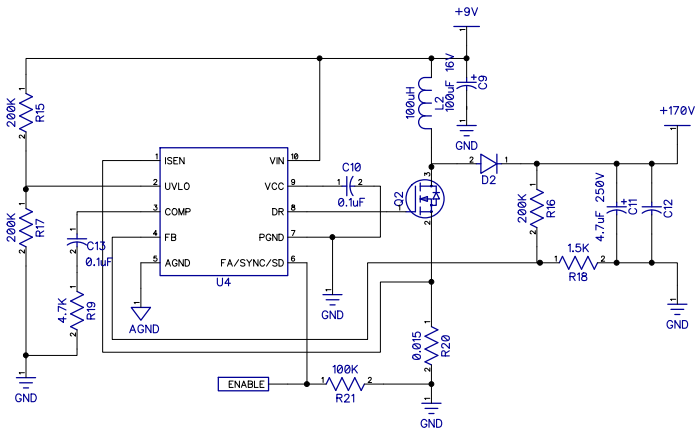
+9V
C9
16V
100uF
L2
100uH
GND
+170V
D2
Q2
C10
0.1uF
VIN
VCC
DR
PGND
FA/SYNC/SD
ISEN
UVLO
COMP
FB
AGND
U4
R15
200K
R17
200K
C13
0.1uF
R19
4.7K
AGND
GND
R16
200K
250V
4.7uF
C11
C12
R18
1.5K
GND
R20
0.015
ENABLE
R21
100K
GND

+5V
1
100K
R22
2
1
2
J13
LDR
1
GND

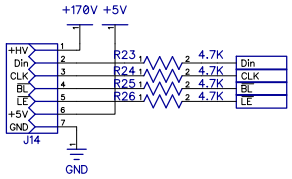
+170V
+5V
+HV
DIn
CLK
BL
LE
+5V
GND
J14
1
2
3
4
5
6
7
R23
R24
R25
R26
4.7K
4.7K
4.7K
4.7K
DIn
CLK
BL
LE
GND