Algorithm Problems

Nathan Gremillion

March 7, 2026

Chapter 2 (Getting Started)

Section 2.1 (Insertion sort)

2.1-4
Consider the searching problem:
Input: A sequence of n numbers $< a_1, a_2, ..., a_n >$ stored in array A[1:n] and a value x.
Output: An index i that x equals A[i] or the special value *NIL* if x doesn't appear in A.

Write pseudocode for linear search, which scans through the array from begin-ning to end, looking for x. Using a loop invariant, prove that your algorithm is correct. Make sure that your loop invariant fulûlls the three necessary properties.

```
# give the index of the x target or else -1 if not found
def find_val(x: int, array: list[int]) -> int:
    n: int = len(array)
    res: int = -1

    for i in range(n):
        if (array[i] == x):
            res = i
            break

    return res

array: list[int] = [1,2,3,4,5,6,7]
index: int = find_val(100, array)

print(f"Index: {index}")
```

Note: Loop invariant properites include:

- **Initialization**: The invariant is true prior to the first iteration of the loop.
- **Maintenance**: If the invariant is true before an iteration of the loop, it remains true before the next iteration.
- **Termination**: The loop eventually terminates. When it does, the invariant—together with the reason the loop terminated—gives a useful property that helps prove the algorithm is correct.

Proof. **Initialization:** Before the first iteration, the loop variable i is set to 0. At this point, the subarray $A[0:i]$ contains no elements. Therefore, no index $j < i$ exists such that $A[j] = x$. The loop invariant holds because we have not yet examined any elements, so it is correct that x has not been found in the subarray. Thus we return Nil (-1) which is a valid solution in this scenerio.

Maintenance: Next, we show that each iteration maintains the loop invariant. This means that if the invariant holds for the nth iteration, then it also holds for the (n+1)th iteration

Assume that at the start of the nth iteration the invariant holds. That is, we have already checked all indices $i \in [0, n-1]$ and found that $A[i] \neq x$. Therefore the value x has not been found in the first n element.

During the next iteration we check at index n. If A[n] == x then the algorithm returns the index n. Otherwise we continue to the next iteration and we know that A[0:n] does not conatin x

Thus loop invariant holds for the next iteration. And thus we have shown Maintenance holds for the algorithm.

Termination The loop terminates when either the element x is found or when the index i reaches n, the lengthe of the array. Since the loop increments i each iteration and $0 \leq i \leq n$, the algorithm must terminate.

If the algorithm terminate because A[i] == x, then the it correctly returns the index i.

If the loop terminates because i == n, the by the loop invariant we know that x is not in A[0:n-1]. Therefore, the element x does not appear in the array, and we return -1 indicating this. □

2.1-5

Consider the problem of adding two n-bit binary integers a and b, stored in two n-element arrays A[0:n-1] and B[0:n-1], where each element is either 0 or 1, a = $\sum_{i=0}^{n-1}$ A[i]*2^i, and b = $\sum_{i=0}^{n-1} B[i] * 2^i$. The sum c = a + b of the two integers should be stored in binary form in an (n + 1)-element array C[0:n], where c = $\sum_{i=0}^{n} C[i] * 2^i$. Write a procedure ADD-BINARY-INTEGERS that takes as input arrays A and B, along with the length n, and returns array C holding the sum.

```
def add_binary_arrays(binary1: list[str], binary2: list[str]) -> list[str]:
# keep pointers for binary 1 and binary 2
# from the question they have the same len so
# it is fair to say len(binary1) == len(binary2) == n
n: int = len(binary1)
i: int = n-1
carry: bool = False
C: list[str] = ['0'] * (n + 1)


while (i >= 0):
    bit1: str = binary1[i]
    bit2: str = binary2[i]
```

```
        if (bit1 == '1' and bit2 == '1'):
            if (carry):
                C[i+1] = '1'
            carry = True

        elif ((bit1 == '1' and bit2 == '0')
            or (bit1 == '0' and bit2 == '1')):
            if (not carry):
                C[i+1] = '1'
                carry = False
            else:
                carry = True

        else: # both are 0
            if (carry):
                C[i+1] = '1'
            carry = False

        i -= 1

    # check carry for the last bit
    if (carry):
        C[0] = '1'

    return C
```

Section 2.2 (Analyzing algorithms)

2.2-1
Express the function $n^3/1000 + 100n^2 - 100n + 3$ in terms of θ-notation.

So we have $c_1n^3 + c_2n^2 - c_3n$ we know the we can cancel out the constant terms since they are negligable for large vlaues of n and we know n^3 grows the fastest since it is a cubic. $\theta(n^3)$ is the answer

2.2-2
Consider sorting n numbers stored in array A[1:n] by first finding the smallest element of A[1:n] and exchanging it with the element in A[1]. Then find the smalles element of A[2:n], and exchange it with A[2]. Then find the smallest element of A[3:n], and exchange it with A[3]. Continue this for the first n-1 elements of A. Write the code for this algorithm (this is selection sort). What loop invariant does this algorithm maintain? Why does it need to run for only the first n-1 elements, rantehr than all n? Give the worst-case running time of selection sort in $\theta - notation$. Is the best-case run time any better?

```
# selection sort code (in place)
def selectionSort(array: list[int]) -> None:
```

```
MAX_INT: int = 1000000000

n: int = len(array)
i: int = 0

while (i < n-1):
    cur_min: int = MAX_INT
    min_i: int = 0

    for j in range(i, n):
        num: int = array[j]

        if (num < cur_min):
            cur_min = num
            min_i = j

    temp: int = array[i]
    array[i] = array[min_i]
    array[min_i] = temp
    i += 1
```

The loop invariant that this algorithm maintains (the property that holds true before and after every iteratoin of the loop). A[0:i-1] contains the i-1 smallest elements of the array and they are in sorted order

The algorithm only needs to run for the first n-1 elements because of the way it works it selects the smallest element for the current subarray being checked A[i:n] it then places that in the lowest postion in subarray and does this $\forall i \in [0 : n-1]$ so by the time i gets to n-1 this sub array is A[n-1:n] which only contains 1 element and thus is already sorted.

The worst case runtime of selection sort would be $\theta(n^2)$

The best case runtime of selection sort would be $\theta(n^2)$ which is the same. There is no mechanism to check if the subarray being checked is already sorted.

2.2-3

Consider linear search again (see Exercise 2.1-4). How many elements of the input array need to be checked on the average, assuming that the element being searched for is equally likely to be any element in the array? How about in the worst case? Using $\theta - notation$, give the average-case and worst-case run times of linear search. Justify your answers.

Let x be the element we are searching for. Let n be the number of elements in the array.

Assuming that x exists in the array then statistically on average we should have to check roughly n/2 elements to find x. Since x is equally likely to be at each index the average would look like $\frac{(1+2+...+n)}{n}$ and we know $1+2+...+n = \frac{n(n+1)}{2}$ thus using substitution we get an average runtime of $\frac{n(n+1)}{2n} = \frac{n+1}{2} = \frac{n}{2} + \frac{1}{2}$

In the worst cast the element would be at the last index in the array so at A[n-1] in this scenerio we have to check all n elements to find x.

Notice: the dominant term for both the average and worst case remains $\theta(n)$ the only thing that changes is the constants.

2.2-4
How can you modify any sorting algorithm to have a good best-case running time?
You can add a way to check if the subarray you are currently finding the min for is already sorted. so maybe somthing like this

```
# selection sort code (in place)
def selectionSort(array: list[int]) -> None:

    n: int = len(array)
    i: int = 0

    while (i < n-1):
        cur_min: int = array[i]
        min_i: int = 0
        already_sorted: bool = True

        for j in range(i, n):
            num: int = array[j]

            if (j != n-1 and array[j + 1] < num):
                already_sorted = False

            if (num < cur_min):
                cur_min = num
                min_i = j

        if (already_sorted):
            return

        temp: int = array[i]
        array[i] = array[min_i]
        array[min_i] = temp
        i += 1
```

Section 2.3 (Designing algorithms)

2.3-1
Using Figure 2.4 as a model, illustrate the operation of merge sort on an array initially containing the sequence $< 3, 41, 52, 26, 38, 57, 9, 49 >$.

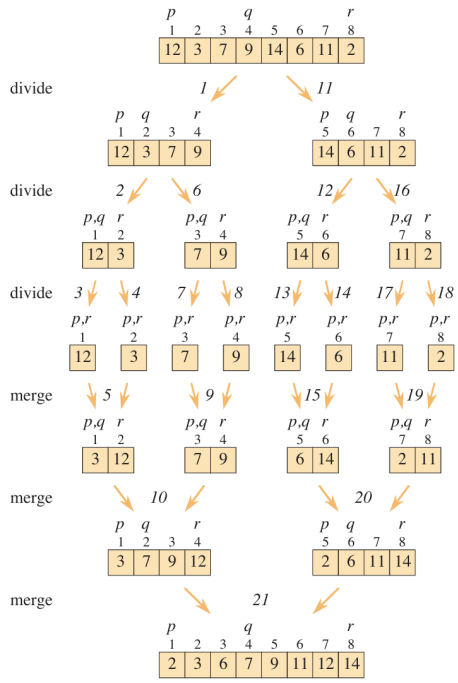

2.3-2

This test in line 1 of MERGE-SORT procedure reads "$if p \geq r$" rather than "if $p \neq r$." If MERGE-SORT is called $p > r$, then the subarry A[p:r] is empty. Argue that as long as the intial call of MERGE-SORT(A,1,n) has $n \geq 1$, the test "if $p \neq r$" suffices to ensure that no recursive call has $p > r$.

2.3-3

State a loop invariant for the while loop of lines 12-18 of the MERGE procedure. Show how to use it, along with the while loops of lines 20-23 and 24-27, to prove that the MERGE procedure is correct.

2.3-4

Use mathmatical induction to show that when $n \geq 2$ is an exact power of 2, the solution of the recurrence

$$T(n) = \begin{cases} 2 & : n = 2, \\ 2T(n/2) + n & : n > 2 \end{cases}$$

is T(n) = nlgn.

2.3-5

You can also think of insertion sort as a recursive algorithm. In order to sort A[1:n], recursively sort the subarray A[1:n-1] and then insert A[n] into the sorted subarray A[1:n-1]. Write the code for this recurisve version of insertion sort. Give a recurrence for its worst-case run time.

2.3-6

Referring back to the searching problem (see Exercise 2.1-4), observe that if the subarray being searched is already sorted, the searching algorithm can check the midpoint of the subarray against

v and eliminate half of the subarray from further consideration. The binary search algorithm repeats this procedure, halving the size of the remaining portion of the subarray each time. Write pseudocode, either iterative or recursive, for binary search. Argue that the worst-case running time of binary search is $\theta(lgn)$.

2.3-7
The while loop of lines 5-7 of the INSERTION-SORT procedure in Section 2.1 uses a linear search to scan (backward) throught the sorted subarray A[1:j-1]. What if insertion sort used a binary search (Exercise 2.3-6) instead of a linear search? Whould that imporove the overall worst-case run time to $\theta(nlgn)$?

2.3-8
Write the algorithum that, given a set S of n integers and another integer x, determines whether S contains two elements that sum to exactly x. Your algorithum should take $\theta(nlgn)$ time in the worst case.

Chapter 2 Questions

2-1 Insertion sort on small arrays in merge sort
Although merge sort runs in $\theta(nlgn)$ worst-case time and insertion sort runs in $\theta(n^2)$ worst-case , the constant factors in insertion sort can make it faster in practice for small problem sizes on many machines. Thus it makes sense to coarsen the leaves of the recursion by using insertion sort within merge sort when subproblems become sufûciently small. Consider a modiûcation to merge sort in which n/k sublists of length k are sorted using insertions sort and then merged using the standard merging mechanism, where k is a vlue to be determined.

a. Show that insertion sort can sort the n/k sublists, each of length k, in $\theta(nk)$ worst-case time.

b. Show how to merge the sublists in $\theta(nlg(n/k))$ worst-case time.

c. Given that the modified algorithm runs in $\theta(nk + nlg(n/k))$ worst-case time, what is the largest value of k as a function of n for which the modified algorithm has the same running time as standard merge sort, in terms of $\theta - notation$?

d. How should you choose k in practice?

2-2 Correctness of bubblesort
Bubblesort is a popular, but inefûcient, sorting algorithm. It works by repeatedly swapping adjacent elements that are out of order. The procedure BUBBLESORT sorts array A[i:n].

```
def bubblesort(array: list[int], n: int):
    for i in range(n):
        for j in range(n, i, -1):
            if (array[j] < array[j - 1]):
                temp: int = array[j]
                array[j] = array[j-1]
                array[j-1] = temp
```

a. Let A' denote the array A after bubblesort(A,n) is executed. To prove that bubblesort is correct, you need to prove that it terminates and that $A'[1] \leq A'[2] \leq .... \leq A'[n]$. (2.5)
In order to show that bubblesort actually sorts, what else do you need to prove?

b. State precisely a loop invariant for the for loop in lines 2-4, and prove that this loop invariant holds. Your proof should use the structure of the loop-invariant proof presented in this chapter.

c. Using the termination condition of the loop invariant proved in part (b), state a loop invariant for the for loop in lines 1-4 that allows you to prove inequal- ity (2.5). Your proof should use the structure of the loop-invariant proof pre- sented in this chapter.

d. What is the worst-case running time of BUBBLESORT? How does it compare with the running time of INSERTION-SORT?

2-3 Correctness of Horner's rule
You are given the coefficents $a_0, a_1, a_2, ..., a_n$ of a polynomial
P(x) $= \sum_{k=0}^{n} a_k x^k = a_0 + a_1 x + a_2 x^2 + ... + a_{n-1} x^{n-1} + a_n x^n$,
and you want to evaluate this polynomial for a given value of x. Horner's rule says to evaluate the polynomial according to this parenthesization:
$P(x) = a_0 + x(a_1 + x(a_2 + ... + x(a_{n-1} + x a_n)...))$
The procedure HORNER implements Horner's rule to evaluate P(x), given the coefficents $a_0, a_1, a_2, ..., a_n$ in an array A[0:n] and the value of x.

```
def horner(array, n, x):
    p = 0
    for i in range(n-1, -1, -1):
        p = a[i] + x*p
    return p
```

a. In terms of $\theta - notation$, what is the run time of this procedure?

b. Write code to implement the naive polynomial-evaluation algorithm that computes each term of the polynomial from scratch. What is the running time of this algorithm? How does it compare with HORNER?

c. Consider the following loop invariant for the procedure horner: At the start of each iteration of the for loopof line 2-3, $p = \sum_{k=0}^{n-(i+1)} A[k+i+1] * x^k$.
Interpret a summation with no terms as equaling 0. Following the structure of the loop-invariant proof presented in this chapter, use this loop invariant to show that, at termination,
$p = \sum_{k=0}^{n} A[k] * x^k$.

2-4 Inversions
Let A[1:n] be an array of n distinct numbers. If $i < j$ and $A[i] > A[j]$, then the pair (i,j) is called an inversion of A.
a. List the five inversions of the array $< 2, 3, 8, 6, 1 >$.

b. What array with elements form the set $1, 2, ..., n$ has the most inversions?
How many does it have?

c. What is the relationship between the running time of insertion sort and the number of inversions in the input array? Justify your answer.

d. Give an algorithm that determines the number of inversions in any permutation on n elements in $\theta(nlgn)$ worst-case time. (Hint: Modify merge sort.)

Chapter 3 (Characterizing Running Times)

Chapter 4 (Divide-and-Conquer)

Chapter 5 (Probabilistic Analysis and Randomized Algorithms)

Chapter 6 (Heapsort)

Chapter 7 (Quicksort)

Chapter 8 (Sorting in Linear Time)

Chapter 9 (Medians and Order Statistics)

Chapter 10 (Elementary Data Structures)

Chapter 11 (Hash Tables)

Chapter 12 (Binary Search Trees)

Chapter 13 (Red-Black Trees)

Chapter 14 (Dynamic Programming)

Chapter 15 (Greedy Algorithms)

Chapter 16 (Amortized Analysis)

Chapter 17 (Augmenting Data Structures)

Chapter 18 (B-Trees)

Chapter 19 (Data Structures for Disjoint Sets)

Chapter 20 (Elementary Graph Algorithms)

Chapter 21 (Minimum Spanning Trees)

Chapter 22 (Single-Source Shortest Paths)

Chapter 23 (All-Pairs Shortest Paths)

Chapter 24 (Maximum Flow)

Chapter 25 (Matchings in Bipartite Graphs)

Chapter 26 (Parallel Algorithms)

Chapter 27 (Online Algorithms)

Chapter 28 (Matrix Operations)

Chapter 29 (Linear Programming)

Chapter 30 (Polynomials and the FFT)

Chapter 31 (Number-Theoretic Algorithms)

Chapter 32 (String Matching)

Chapter 33 (Machine-Learning Algorithms)

Chapter 34 (NP-Completeness)

Chapter 35 (Approximation Algorithms)