PARTS LIST			
ITEM	QTY	PART NUMBER	DESCRIPTION
1	1	Hitec HS-425BB Servo	
2	4	Standard Servo Rubber Grommet	
3	4	Standard Servo Brass Sleeve	
4	1	Standar Servo Horn - Red	
5	4	90184A064	
6	1	95836A255	

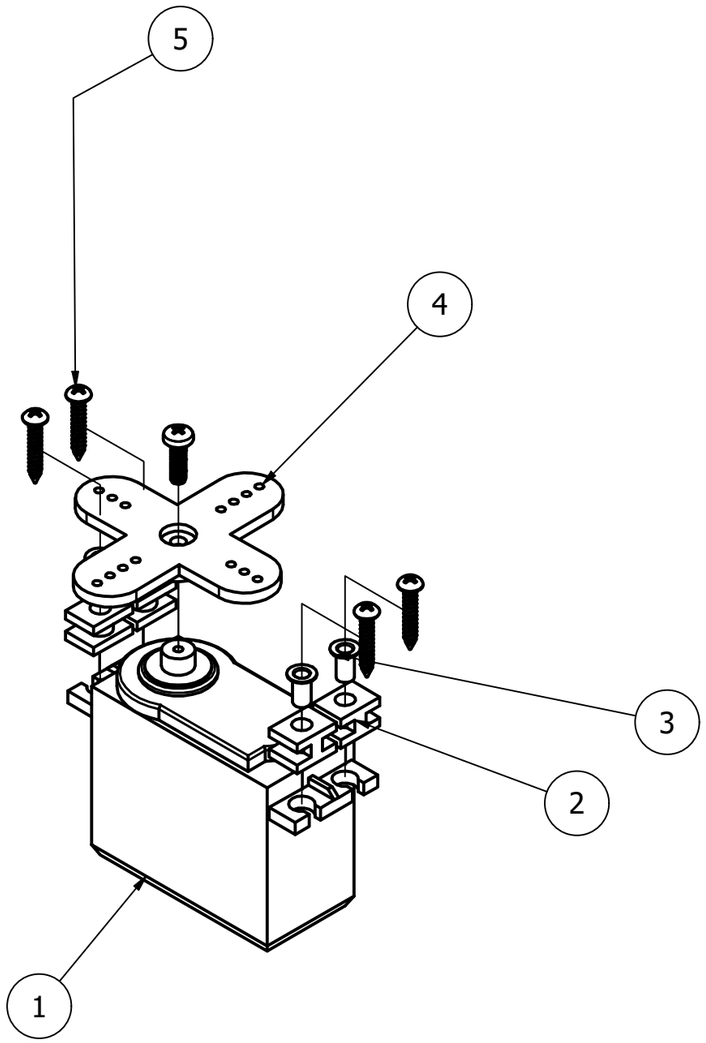

Designed by	Checked by	Approved by	Date	Date	
Nate				9/5/2023	

Servo Assembly

Servo Assembly drawing

Edition

Sheet 1 / 1