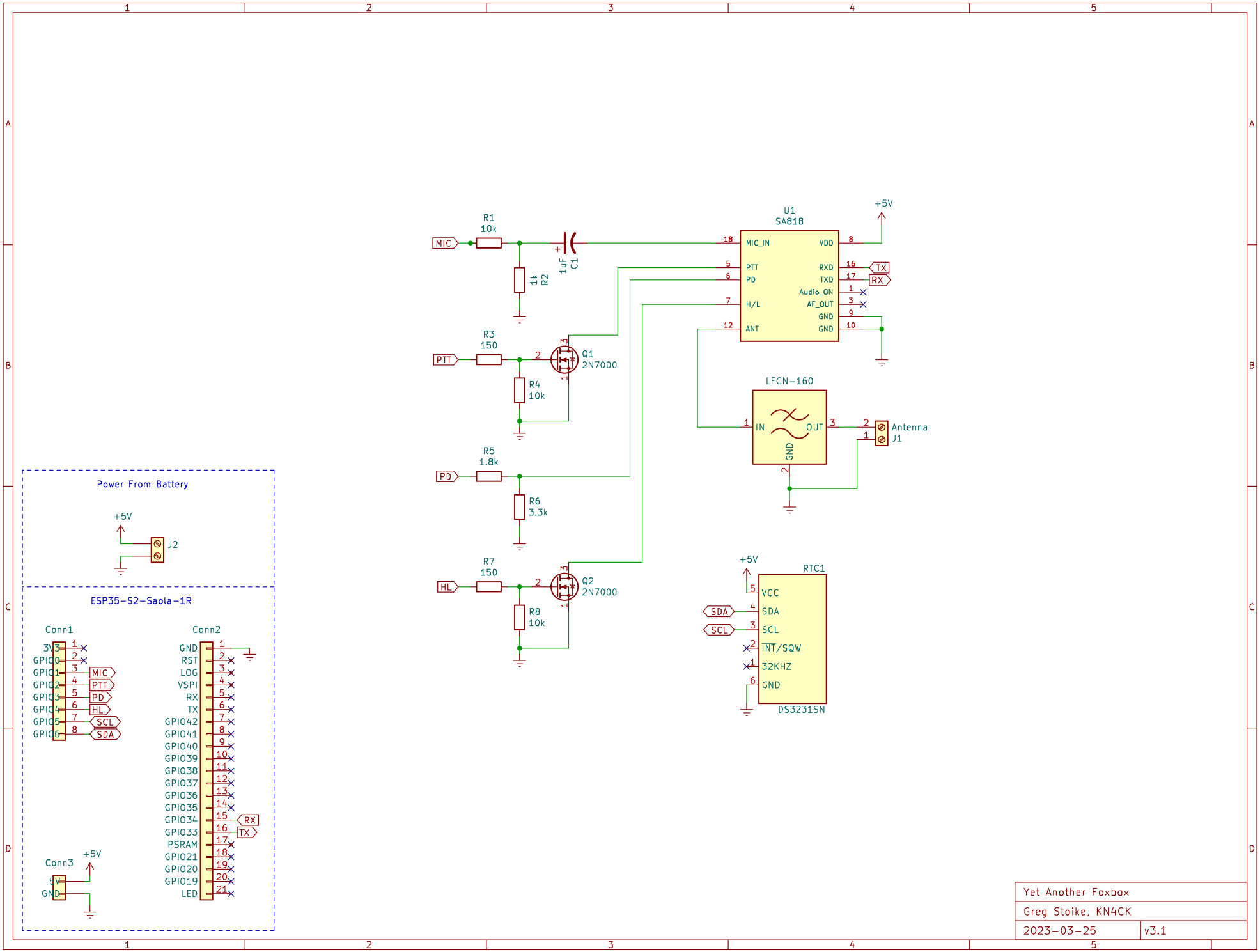
R1
10k
MIC
1k
R2
1uF
C1
U1
SA818
+5V
MIC_IN
VDD
PTT
RXD
TX
PD
TXD
RX
Audio_ON
H/L
AF_OUT
GND
ANT
R3
150
PTT
Q1
2N7000
R4
10k
LFCN-160
IN
OUT
GND
Antenna
J1
R5
1.8k
PD
R6
3.3k
R7
150
HL
Q2
2N7000
R8
10k
RTC1
VCC
SDA
SCL
INT/SQW
32KHZ
GND
DS3231SN
Power From Battery
J2
ESP35-S2-Saola-1R
Conn1
3V3
GPIO0
GPIO1
GPIO2
GPIO3
GPIO4
GPIO5
GPIO6
Conn2
GND
RST
LOG
VSPI
RX
TX
GPIO42
GPIO41
GPIO40
GPIO39
GPIO38
GPIO37
GPIO36
GPIO35
GPIO34
GPIO33
PSRAM
GPIO21
GPIO20
GPIO19
LED
Conn3
5V
GND
Yet Another Foxbox
Greg Stoike, KN4CK
2023-03-25
v3.1