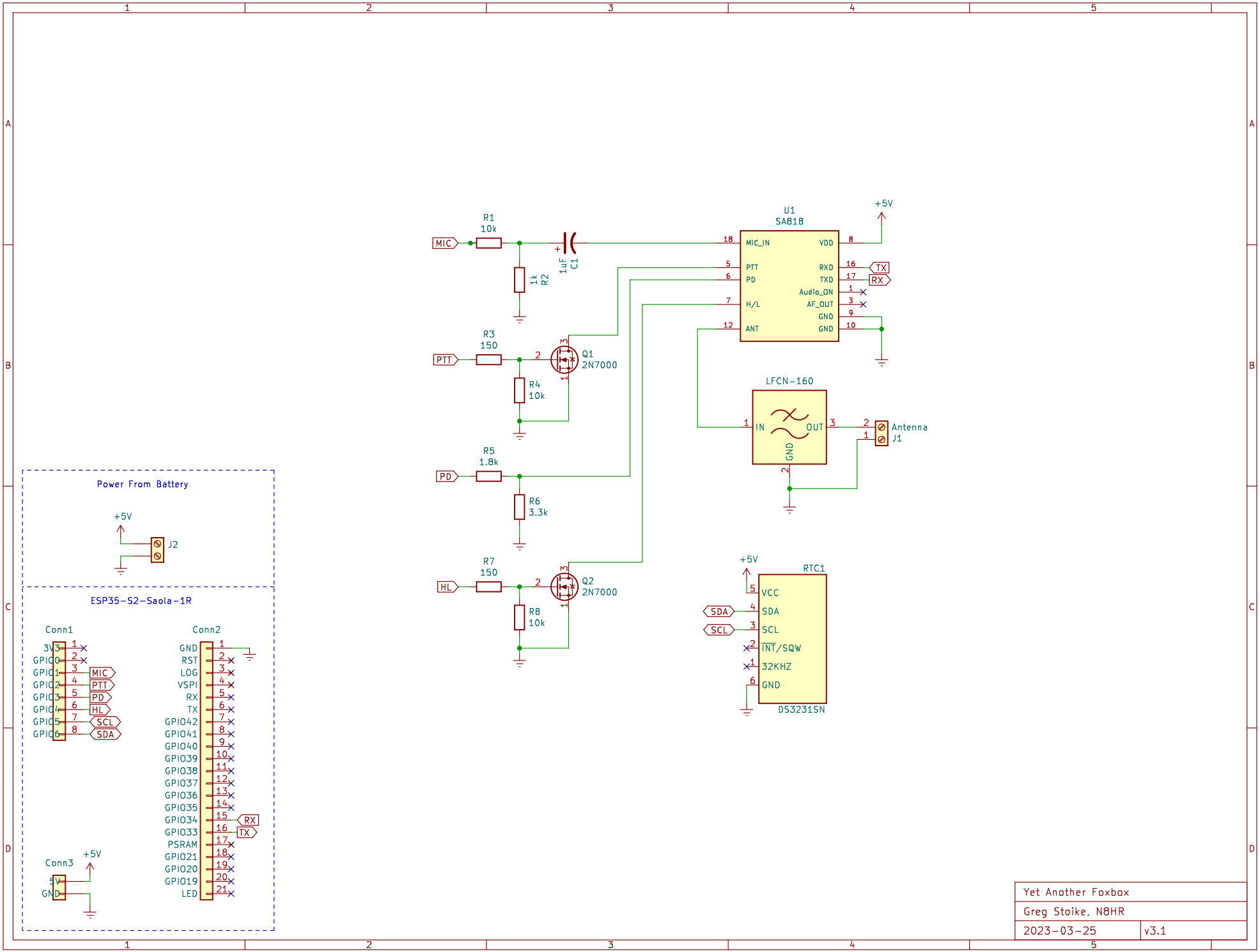

Yet Another Foxbox	
Greg Stoike, N8HR	
2023-03-25	v3.1