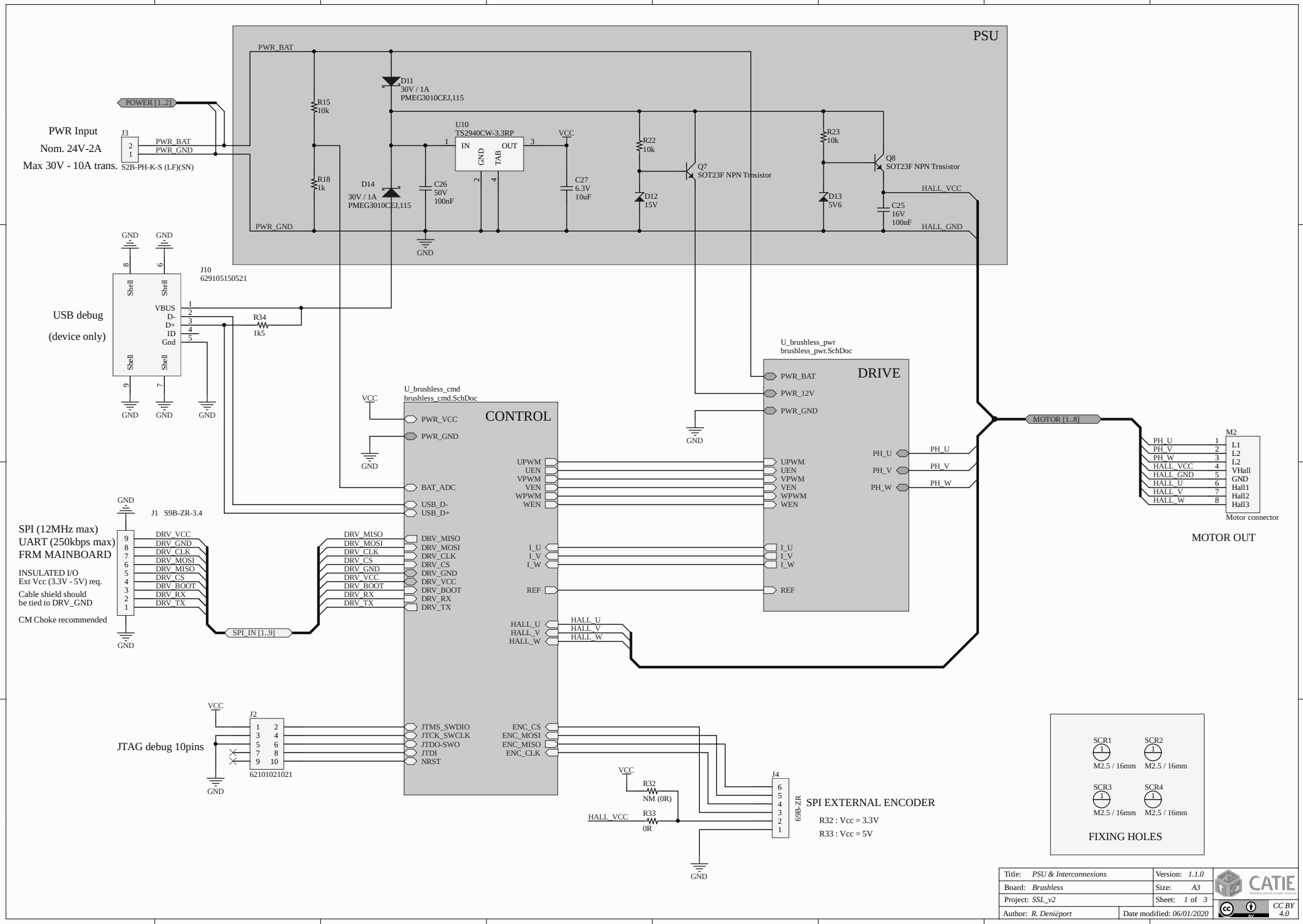
PSU
PWR_BAT
PWR_GND
POWER [1..2]
PWR Input
Nom. 24V-2A
Max 30V - 10A trans.
J3
S2B-PH-K-S (LF)(SN)
R15
10k
R18
1k
D11
30V / 1A
PMEG3010CEJ,115
D14
30V / 1A
PMEG3010CEJ,115
C26
50V
100nF
U10
TS2940CW-3.3RP
IN
OUT
GND
TAB
VCC
C27
6.3V
10uF
R22
10k
D12
15V
Q7
SOT23F NPN Trnsistor
R23
10k
D13
5V6
Q8
SOT23F NPN Trnsistor
C25
16V
100nF
HALL_VCC
HALL_GND
GND
J10
629105150521
Shell
VBUS
D-
D+
ID
Gnd
USB debug
(device only)
R34
1k5
U_brushless_pwr
brushless_pwr.SchDoc
DRIVE
PWR_BAT
PWR_12V
PWR_GND
UPWM
UEN
VPWM
VEN
WPWM
WEN
I_U
I_V
I_W
REF
PH_U
PH_V
PH_W
MOTOR [1..8]
M2
L1
L2
L2
VHall
GND
Hall1
Hall2
Hall3
Motor connector
MOTOR OUT
U_brushless_cmd
brushless_cmd.SchDoc
CONTROL
PWR_VCC
BAT_ADC
USB_D-
USB_D+
DRV_MISO
DRV_MOSI
DRV_CLK
DRV_CS
DRV_GND
DRV_VCC
DRV_BOOT
DRV_RX
DRV_TX
HALL_U
HALL_V
HALL_W
JTMS_SWDIO
JTCK_SWCLK
JTDO-SWO
JTDI
NRST
ENC_CS
ENC_MOSI
ENC_MISO
ENC_CLK
J1 S9B-ZR-3.4
SPI (12MHz max)
UART (250kbps max)
FRM MAINBOARD
INSULATED I/O
Ext Vcc (3.3V - 5V) req.
Cable shield should
be tied to DRV_GND
CM Choice recommended
SPI_IN [1..9]
J2
62101021021
JTAG debug 10pins
J4
69B-ZR
R32
NM (0R)
R33
0R
SPI EXTERNAL ENCODER
R32 : Vcc = 3.3V
R33 : Vcc = 5V
SCR1
SCR2
SCR3
SCR4
M2.5 / 16mm
FIXING HOLES
Title: PSU & Interconnexions
Version: 1.1.0
Board: Brushless
Size: A3
Project: SSL_v2
Sheet: 1 of 3
Author: R. Deniéport
Date modified: 06/01/2020
CATIE
CC BY 4.0

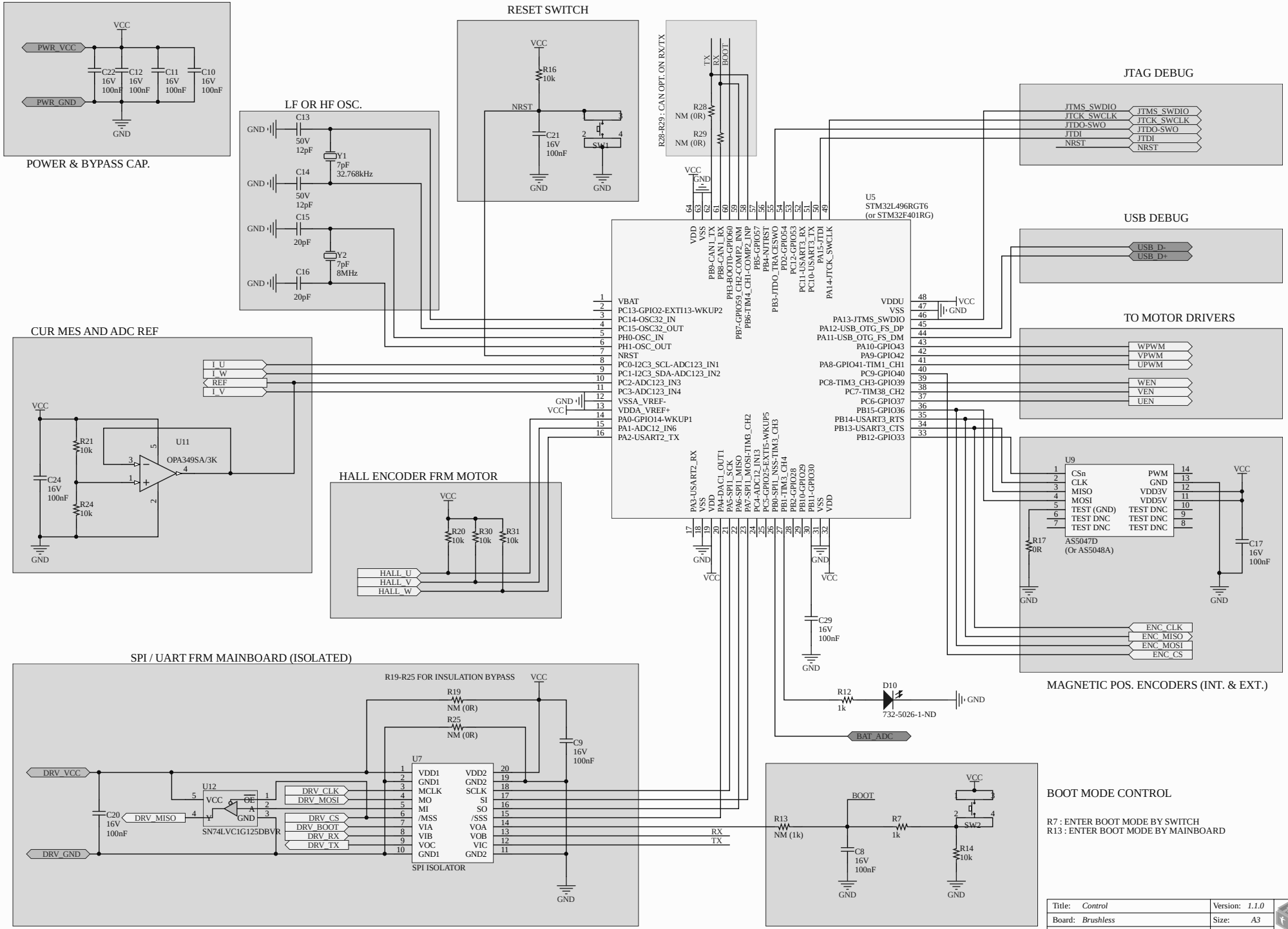
POWER & BYPASS CAP.
PWR_VCC
PWR_GND
VCC
GND
C22 16V 100nF
C12 16V 100nF
C11 16V 100nF
C10 16V 100nF
RESET SWITCH
R16 10k
NRST
C21 16V 100nF
SW1
LF OR HF OSC.
C13 50V 12pF
C14 50V 12pF
C15 20pF
C16 20pF
Y1 7pF 32.768kHz
Y2 7pF 8MHz
R28-R29 : CAN OPT. ON RX/TX
TX
RX
BOOT
R28 NM (0R)
R29 NM (0R)
U5
STM32L496RGT6
(or STM32F401RG)
JTAG DEBUG
JTMS_SWDIO
JTCK_SWCLK
JTDO-SWO
JTDI
NRST
USB DEBUG
USB_D-
USB_D+
TO MOTOR DRIVERS
WPWM
VPWM
UPWM
WEN
VEN
UEN
CUR MES AND ADC REF
I_U
I_W
REF
I_V
U11
OPA349SA/3K
R21 10k
R24 10k
C24 16V 100nF
HALL ENCODER FRM MOTOR
R20 10k
R30 10k
R31 10k
HALL_U
HALL_V
HALL_W
U9
CSn
CLK
MISO
MOSI
TEST (GND)
TEST DNC
TEST DNC
PWM
GND
VDD3V
VDD5V
TEST DNC
TEST DNC
TEST DNC
AS5047D
(Or AS5048A)
R17 0R
C17 16V 100nF
ENC_CLK
ENC_MISO
ENC_MOSI
ENC_CS
MAGNETIC POS. ENCODERS (INT. & EXT.)
C29 16V 100nF
R12 1k
D10
732-5026-1-ND
BAT_ADC
SPI / UART FRM MAINBOARD (ISOLATED)
R19-R25 FOR INSULATION BYPASS
R19 NM (0R)
R25 NM (0R)
C9 16V 100nF
DRV_VCC
DRV_GND
DRV_MISO
C20 16V 100nF
U12
SN74LVC1G125DBVR
DRV_CLK
DRV_MOSI
DRV_CS
DRV_BOOT
DRV_RX
DRV_TX
U7
SPI ISOLATOR
RX
TX
BOOT
R13 NM (1k)
R7 1k
SW2
C8 16V 100nF
R14 10k
BOOT MODE CONTROL
R7 : ENTER BOOT MODE BY SWITCH
R13 : ENTER BOOT MODE BY MAINBOARD
Title: Control
Version: 1.1.0
Board: Brushless
Size: A3
Project: SSL_v2
Sheet: 2 of 3
Author: R. Deniéport
Date modified: 06/01/2020
CATIE
CC BY 4.0

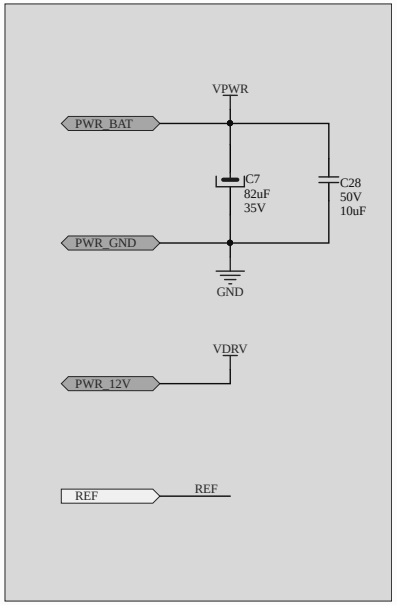

POWER & BYPASS CAP.

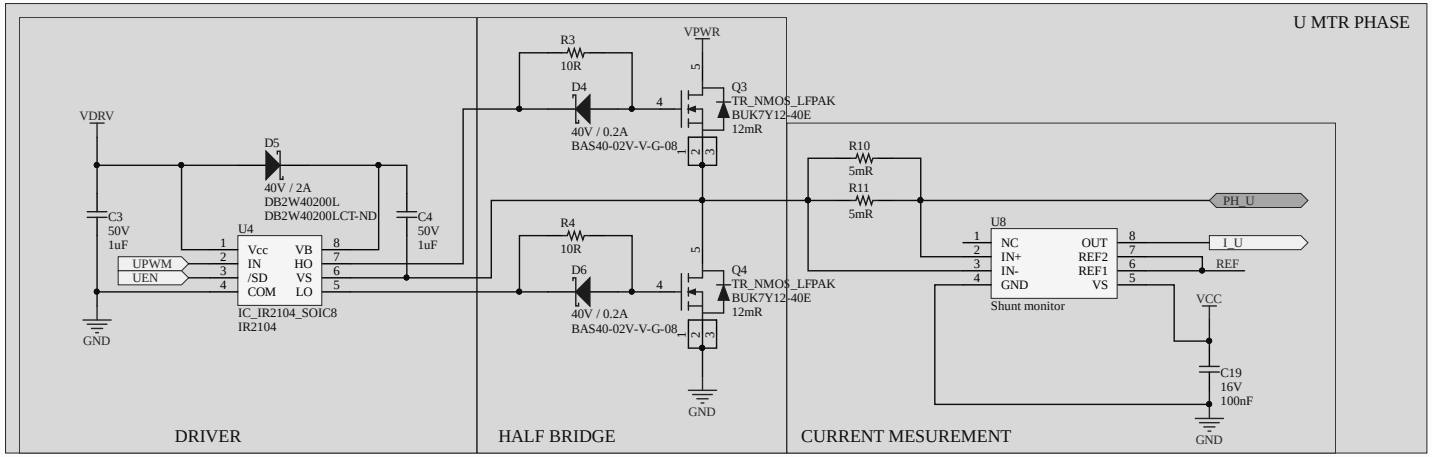

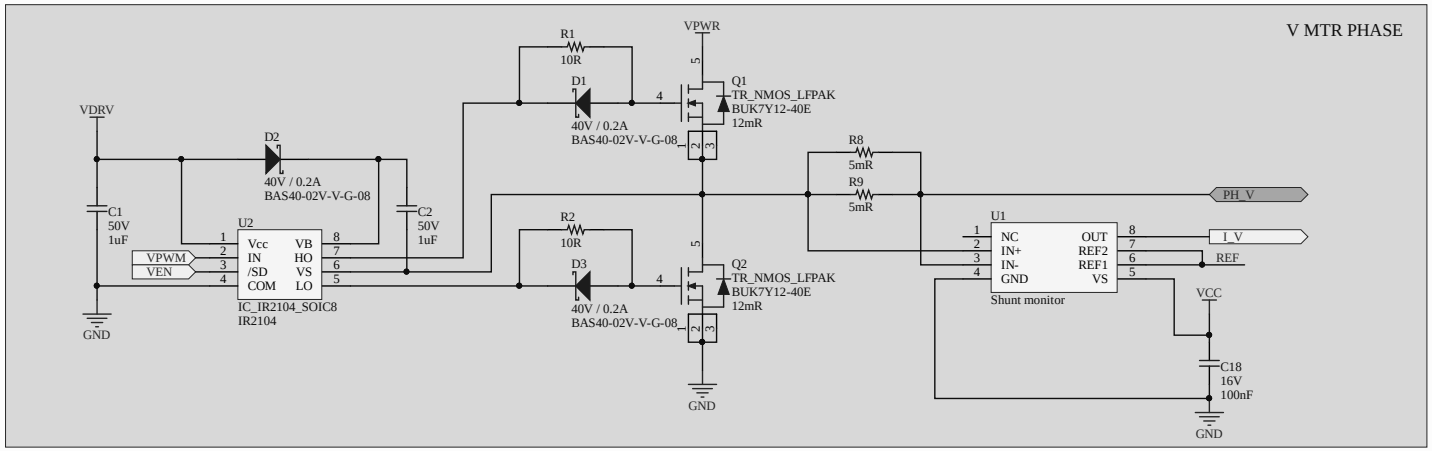

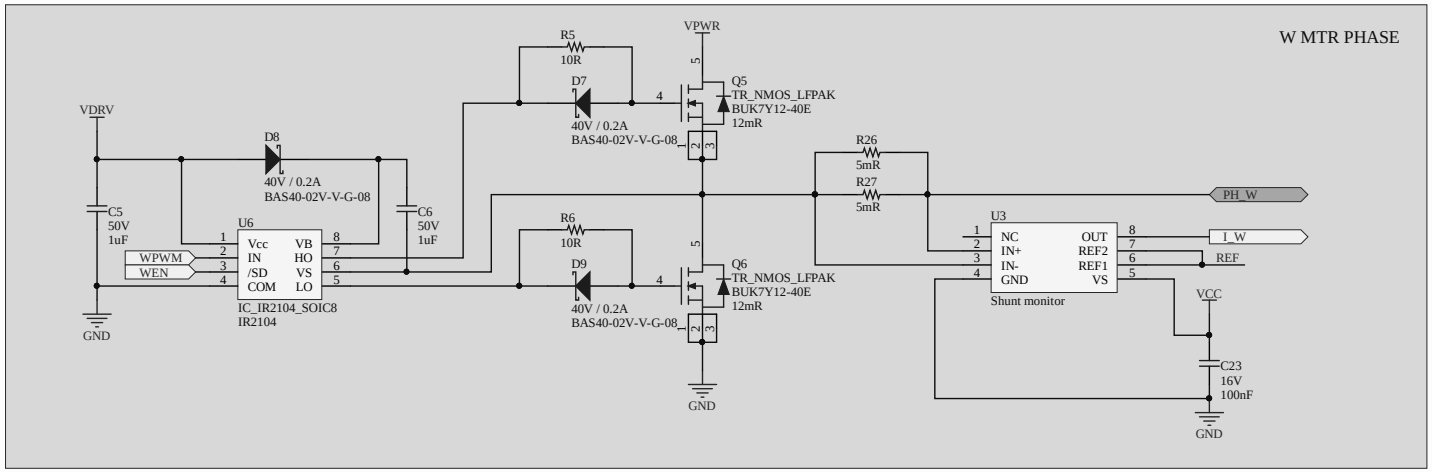

Title: *Driver*		Version: *1.1.0*	CATIE
Board: *Brushless*		Size: *A3*	
Project: *SSL_v2*		Sheet: *3 of 3*	
Author: *R. Deniéport*	Date modified: *19/04/2019*		*CC BY 4.0*