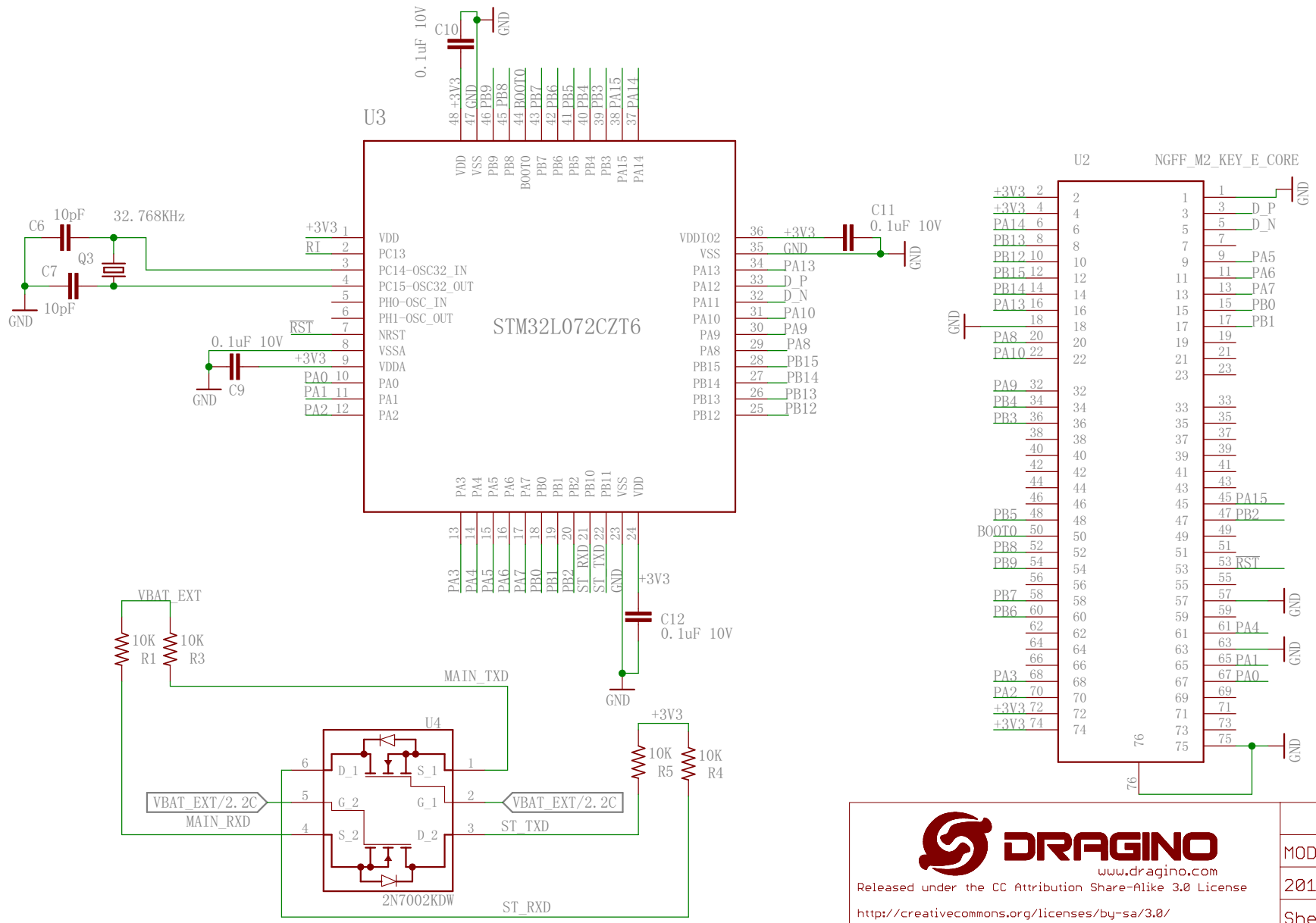

DRAGINO
www.dragino.com
Released under the CC Attribution Share-Alike 3.0 License
http://creativecommons.org/licenses/by-sa/3.0/

MODEL:NB ST v1.1

2019-09-12 11:56

Sheet: 1/2

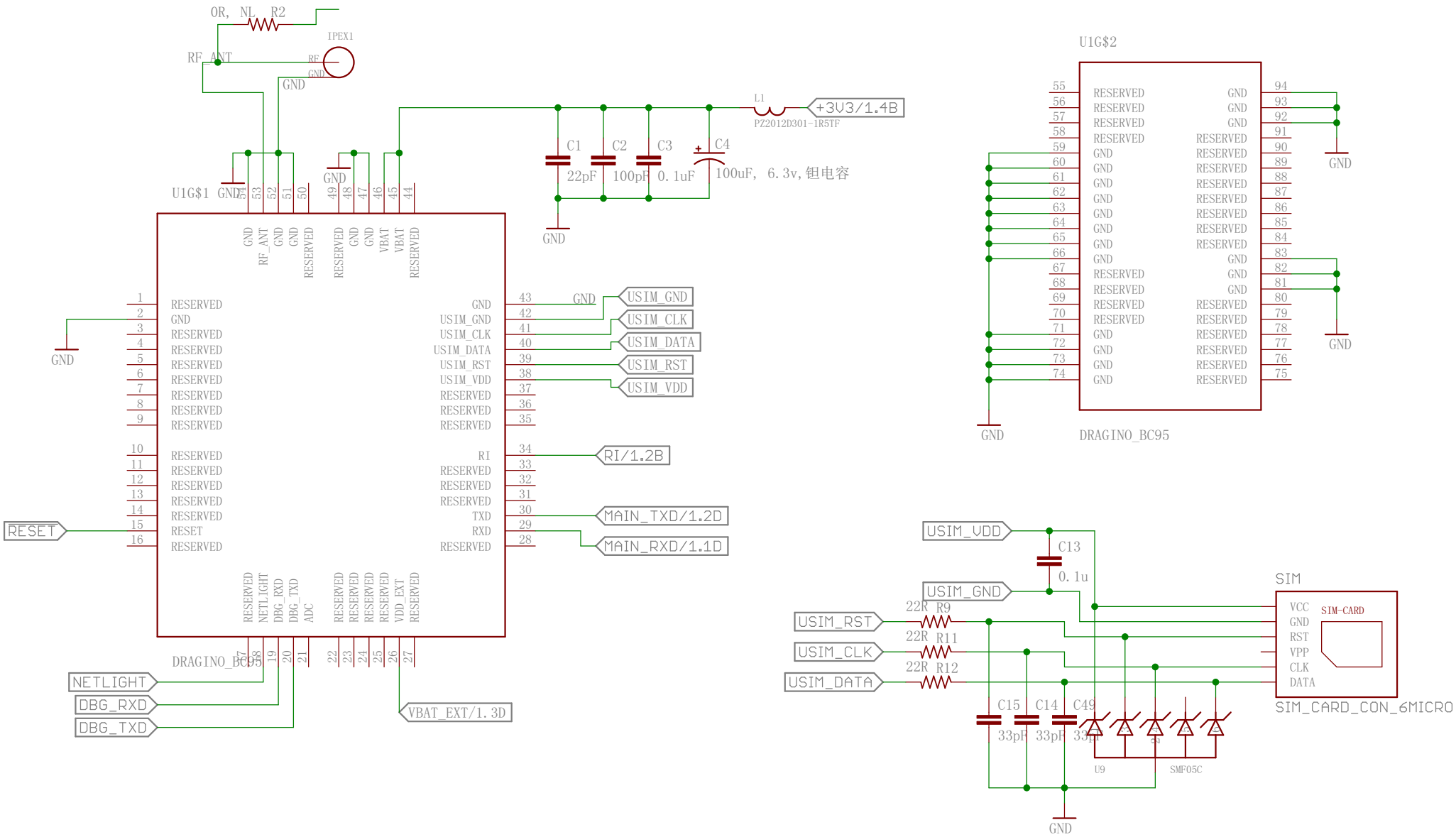

Released under the CC Attribution Share-Alike 3.0 License
http://creativecommons.org/licenses/by-sa/3.0/

MODEL:NB ST v1.1

2019-09-12 11:56

Sheet: 2/2