MODULE 2

PIPE JOINTS

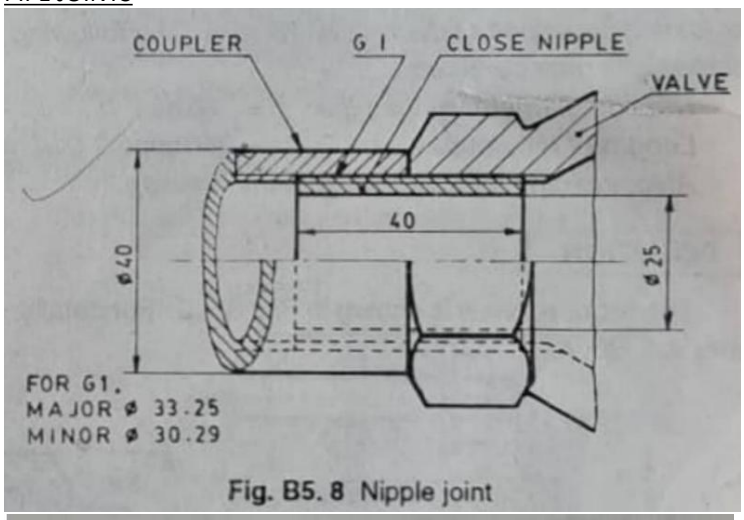

Fig. B5. 8 Nipple joint

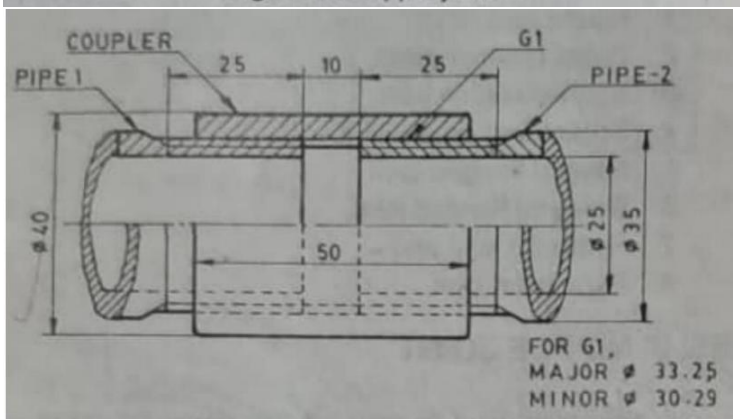

Fig. B5. 9 Collar (coupler) joint

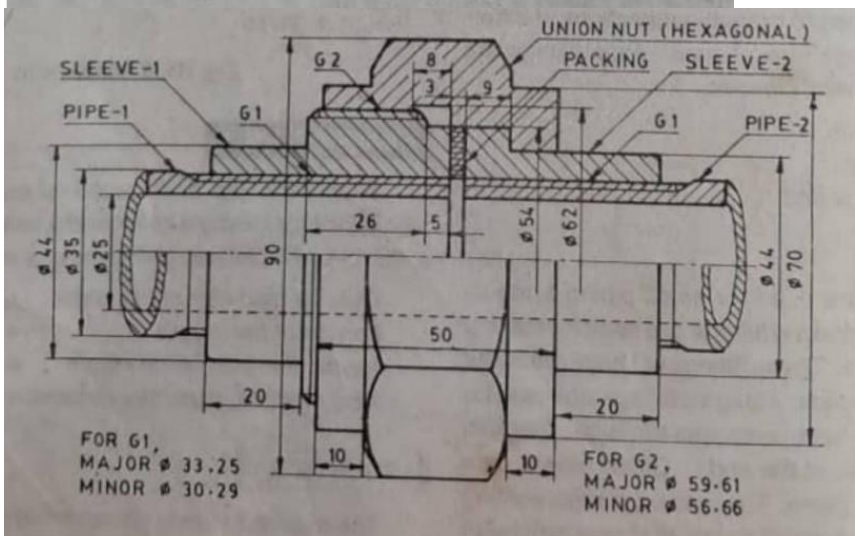

Fig. B5. 10 Screwed union joint

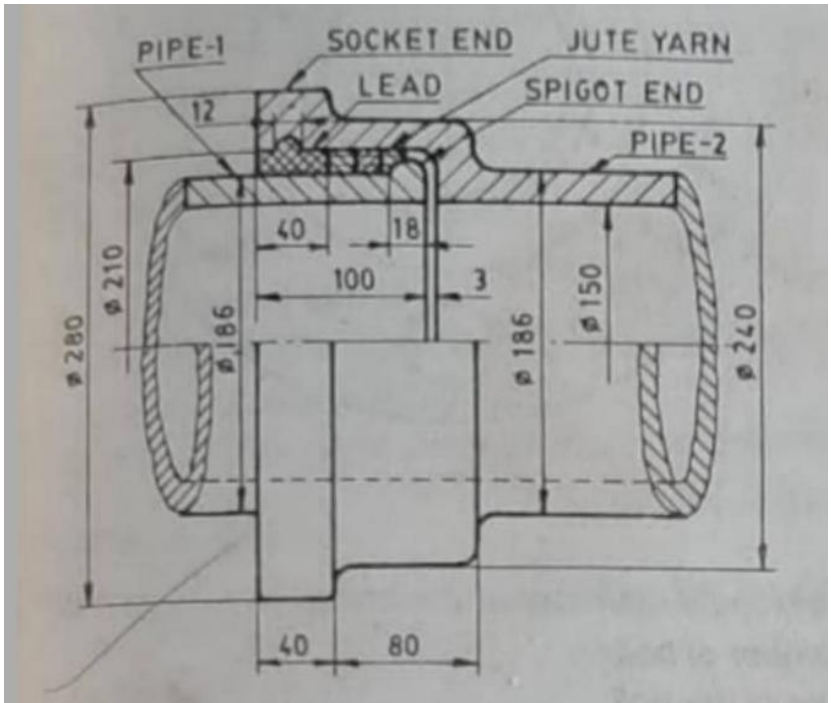

Fig. B5. 11 Socket and spigot pipe joint

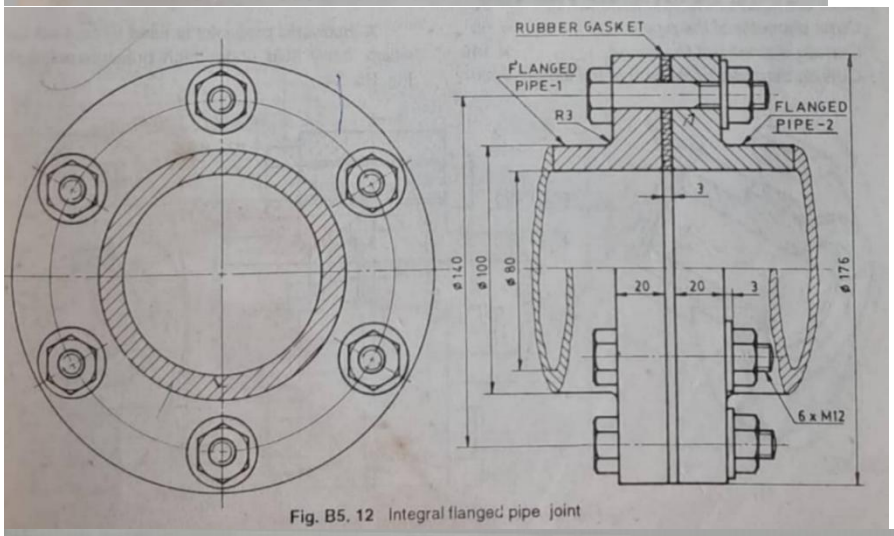

Fig. B5. 12 Integral flanged pipe joint

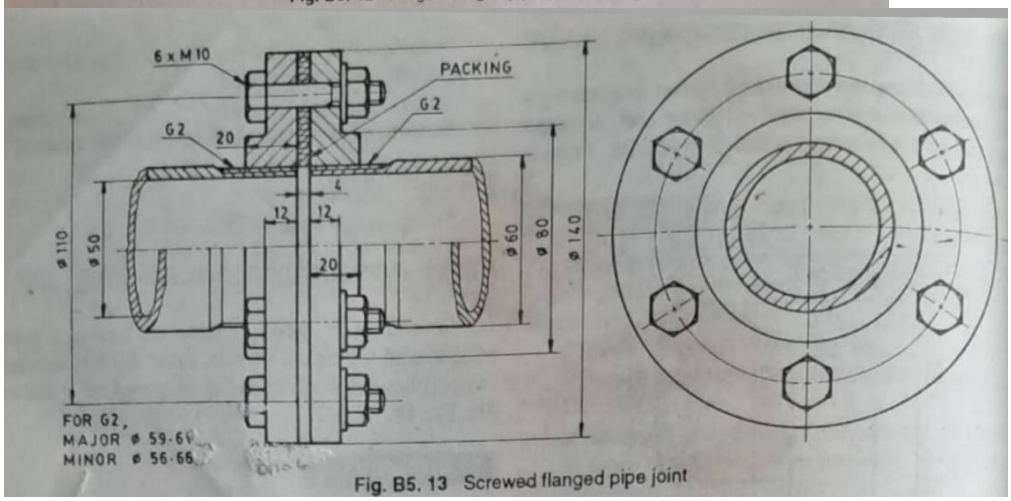

Fig. B5. 13 Screwed flanged pipe joint

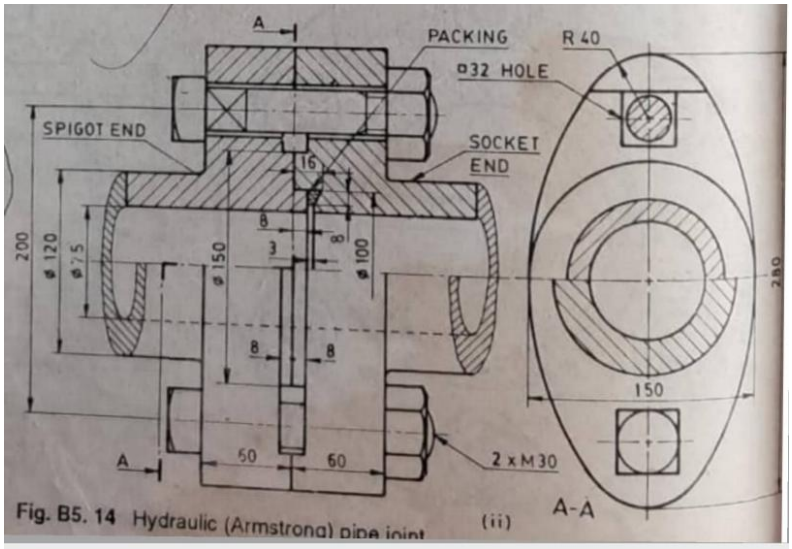

Fig. B5. 14 Hydraulic (Armstrong) pipe joint (ii)