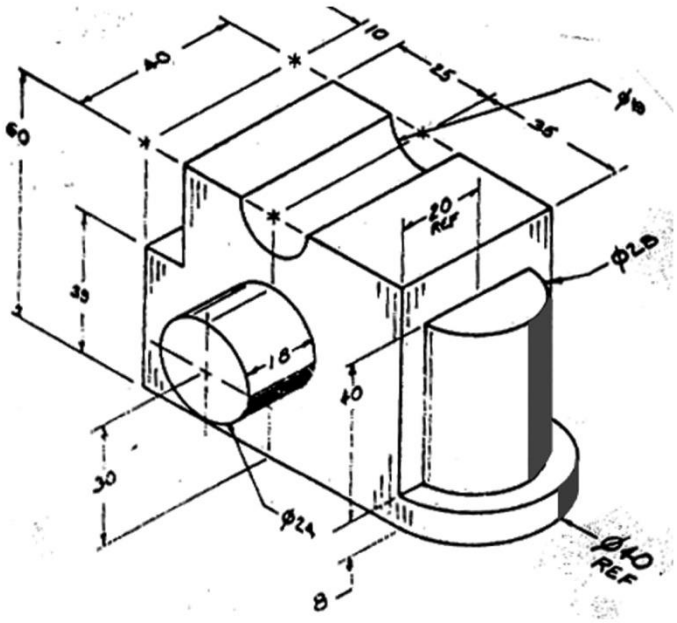
40
10
25
35
60
20 REF
39
16
40
30
8
Ø40 REF

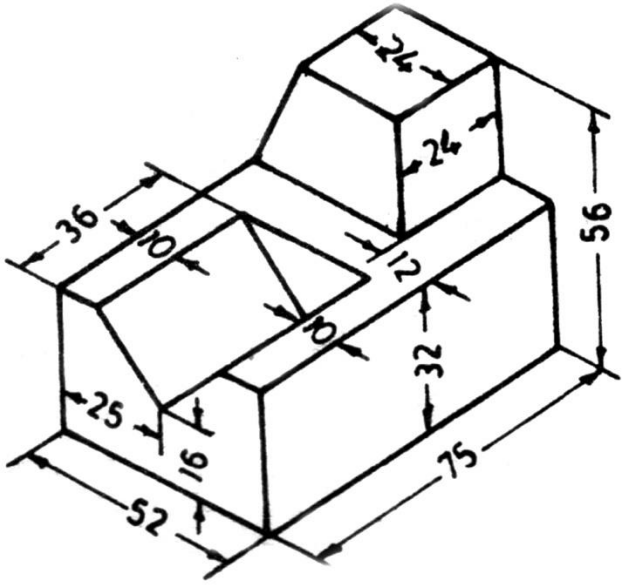
24
24
36
10
12
56
10
32
25
16
52
75

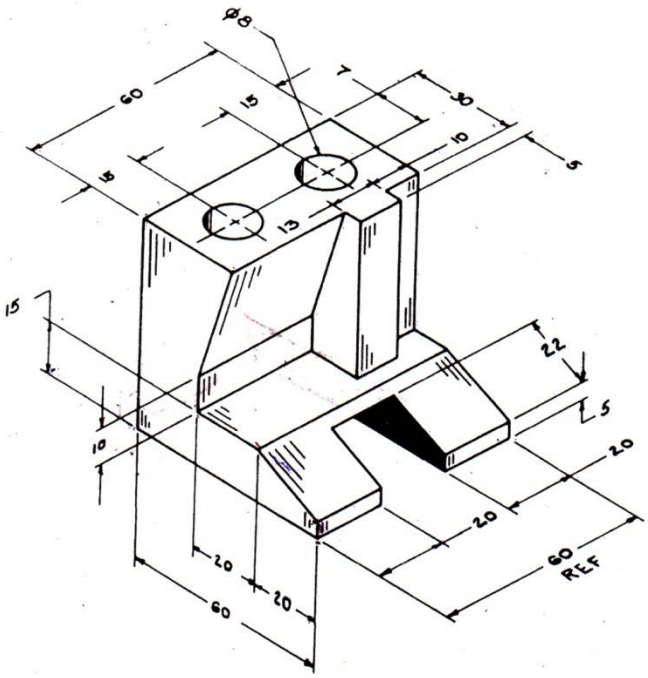
Φ8
60
15
7
30
10
5
15
13
15
22
5
10
20
20
60
REF
20
20
60

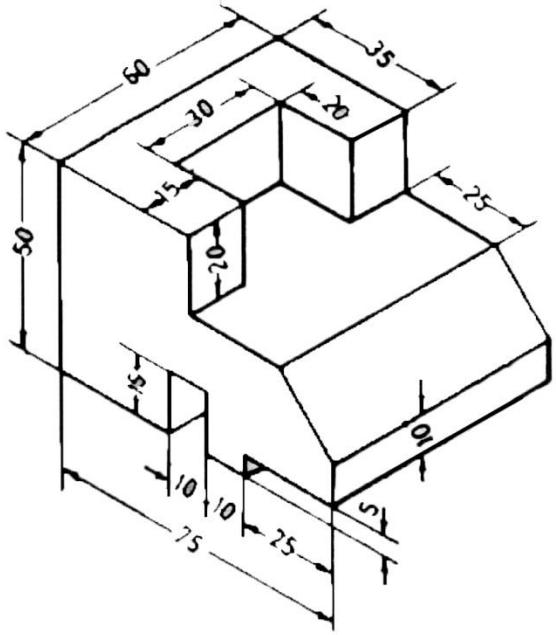
60
35
30
20
15
25
50
20
15
10
10
10
5
25
75

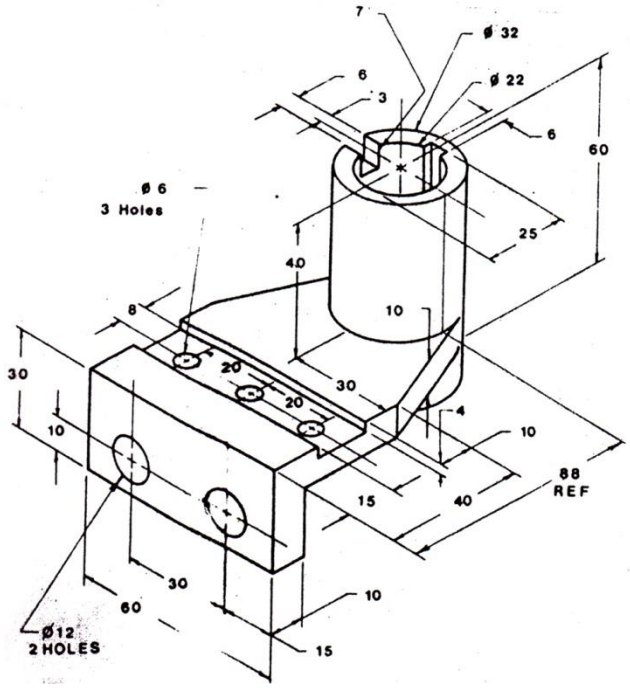
7
ø 32
6
3
ø 22
6
60
ø 6
3 Holes
25
40
8
10
30
20
20
30
4
10
10
88
REF
15
40
30
60
10
ø12
2 HOLES
15

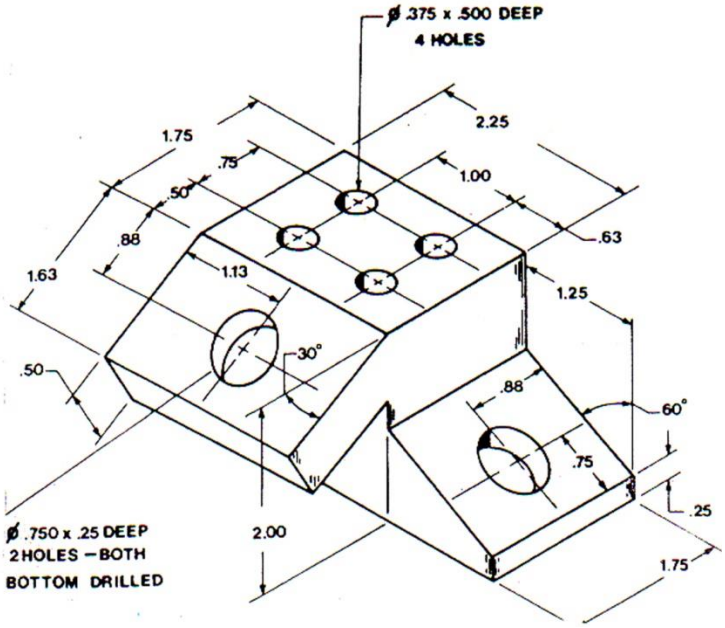
ø .375 x .500 DEEP
4 HOLES
2.25
1.75
.75
1.00
.50
.63
.88
1.13
1.63
1.25
30°
.50
.88
60°
.75
.25
ø .750 x .25 DEEP
2 HOLES – BOTH
BOTTOM DRILLED
2.00
1.75

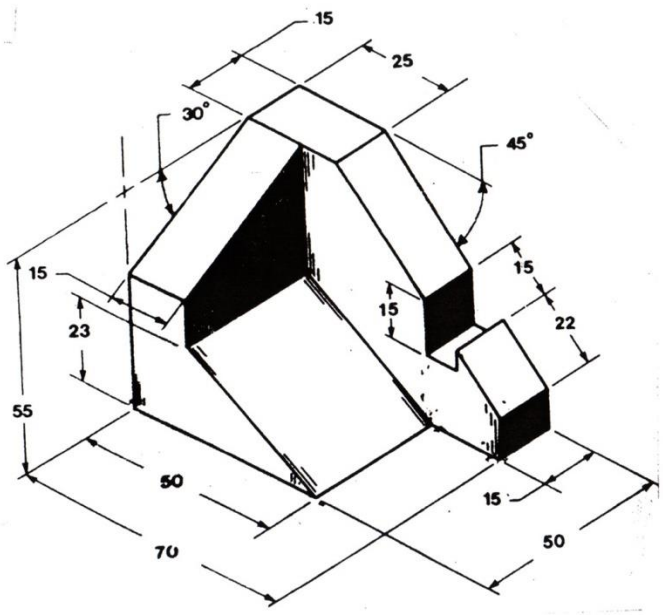
15
25
30°
45°
15
23
55
15
15
22
50
15
70
50

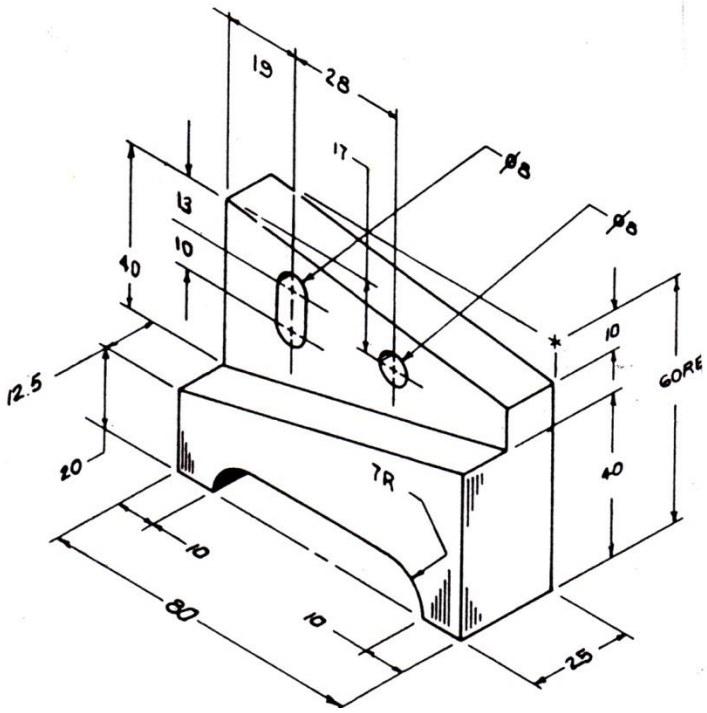
19
28
17
Ø8
Ø8
13
10
40
12.5
20
10
60RE
40
7R
10
80
10
25

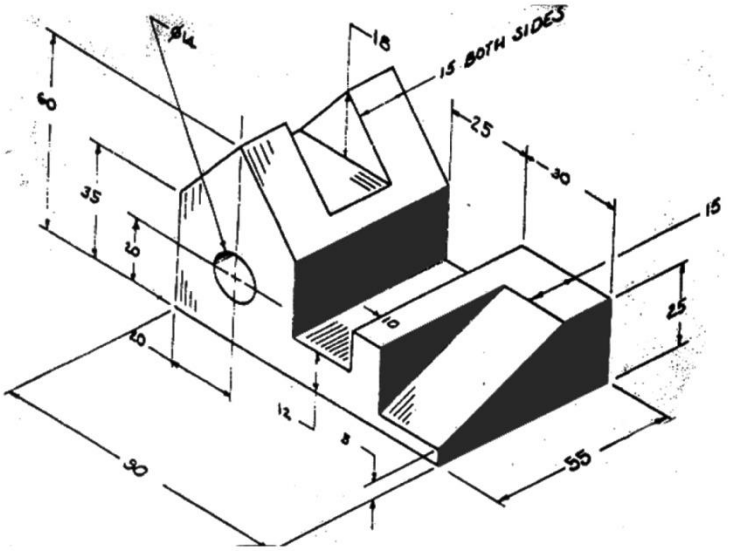
Ø14
18
15 BOTH SIDES
60
35
25
30
15
25
10
15
12
8
90
55