DOUBLE-SECTION FILTER KIT APPLICATIONS

Filter Kit in Input and Output Lines of Remote Speakers Wired to IMA-203, 303, 313 and 323 Master Stations.

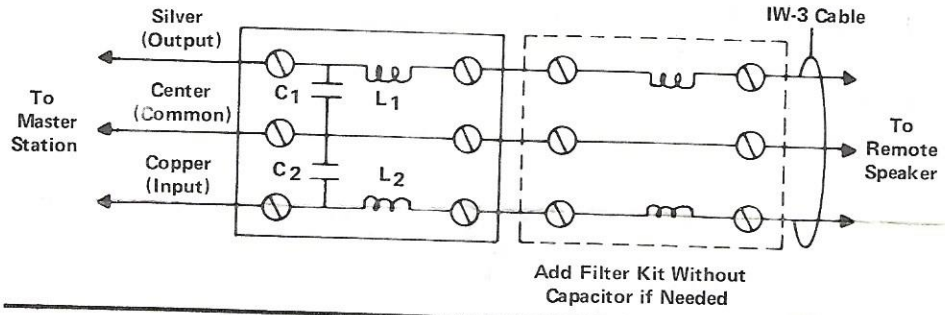

Filter Kit in Input or Output Lines of Remote Speakers Wired to IMA-406 and SM-428 Master Stations or IMA-516 Amplifier.

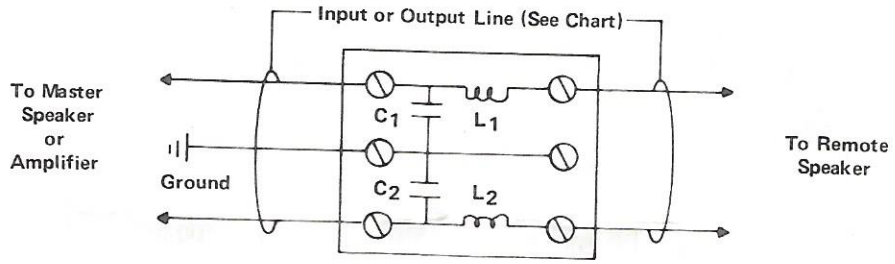

INPUT/OUTPUT LINE COLOR CODING

Model	Input	Output
IMA-406 IMA-516	ORN/ORN-WHT	RED/RED-WHT
SM-428	ORN/ORN-WHT	RED/RED-WHT (Ch. 'A') BLU/BLU-WHT (Ch. 'B')

Filter Kit in Master Station Powerline (All Systems).

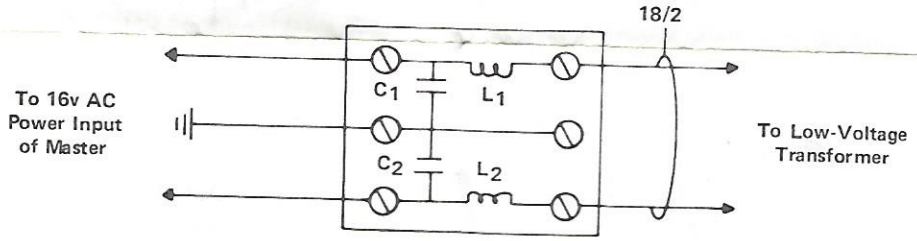

Madison and Red Bank Rds., Cincinnati, Ohio 45227
Printed in U.S.A. 4/81 Part No. FS-1185

NuTone Division
Scovill