NuTone

ASSEMBLY &
INSTALLATION
INSTRUCTIONS

Single Section RFI Filter Kits

5987A, 5988A, 5989A, 5990A, 5991A

Single-section low-pass filter kits are useful in attenuating RFI signals being fed into the master station audio circuit of 3-wire intercom systems (IMA-203, 303, 313, 323) by the input lines from remote speakers, an electronic chime or security-system alarm accessory. A modified version of the kit (including the inductor coil only) can also be used for RFI signals entering any system through the earth ground line. (Refer to application section of this sheet and RFI Manual for additional information).

INTERFERING FREQUENCY	KIT PART NO.	L VALUE	C VALUE
.5 - 2.5 MHz	5987A	750 uh	.05 uf
2.5 - 10 MHz	5988A	250 uh	.01 uf
10 - 50 MHz	5989A	100 uh	.005 uf
50 - 250 MHz	5990A	10 uh	.001 uf
250 MHz & up	5991A	10 uh	100 pf

ASSEMBLY

1. Insert inductor coil and capacitor into PC board (nonfoil side) as shown in Figure 1. Component leads should be as short as possible.
2. Solder components in place on foil side of board and install terminal screws (Figure 2).

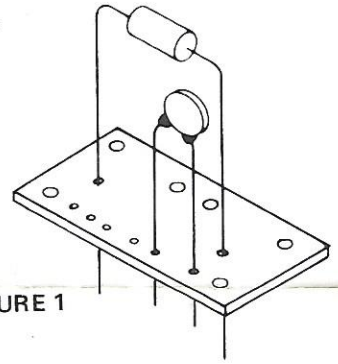

FIGURE 1

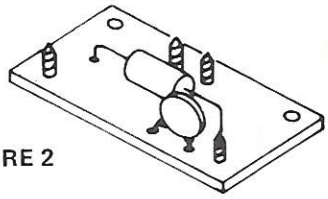

FIGURE 2

(Please see other side)

NOTES:

1. Work on one line at a time.
2. Use a regular filter kit and a modified kit in each line if necessary.
3. Filter assemblies must be staggered in lines to avoid interaction.