NuTone

ASSEMBLY & INSTALLATION INSTRUCTIONS

Double-Section RFI Filter Kits

5997A, 5998A, 5999A, 6000A, 6001A

Double-section low-pass filter kits should be used to attenuate RFI signals being fed into the audio circuit of 3-, 6-, and 8-wire intercom systems by the input and/or output lines from remote speaker(s), an electronic chime, security system alarm accessory or low-voltage power-supply line. (Refer to applications section of this sheet and RFI Manual for additional information.)

INTERFERING FREQUENCY	KIT PART NO.	L_1, L_2, VALUE	C_1, C_2 VALUE
.5 - 2.5 MHz	5997A	750 uh	.05 uf
2.5 - 10 MHz	5998A	250 uh	.01 uf
10 - 50 MHz	5999A	100 uh	.005 uf
50 - 250 MHz	6000A	10 uh	.001 uf
250 MHz & up	6001A	10 uh	100 pf

ASSEMBLY

1. Insert inductor coils and capacitors into PC board (non-foil side) as shown in Figure 1. Component leads should be as short as possible.
2. Solder components in place on foil side of board and install terminal screws (Figure 2).

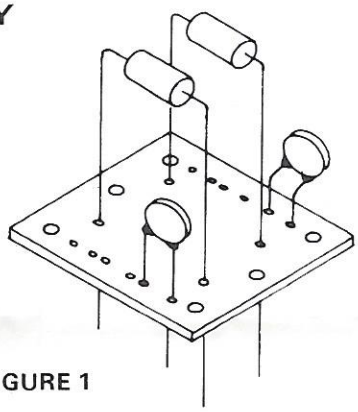

FIGURE 1

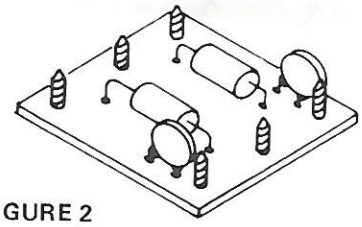

FIGURE 2

(Please see other side)

NOTES:

1. Work on one line at a time.
2. Use a regular filter kit and a modified kit in each line if necessary.
3. Filter assemblies must be staggered in lines to avoid interaction.