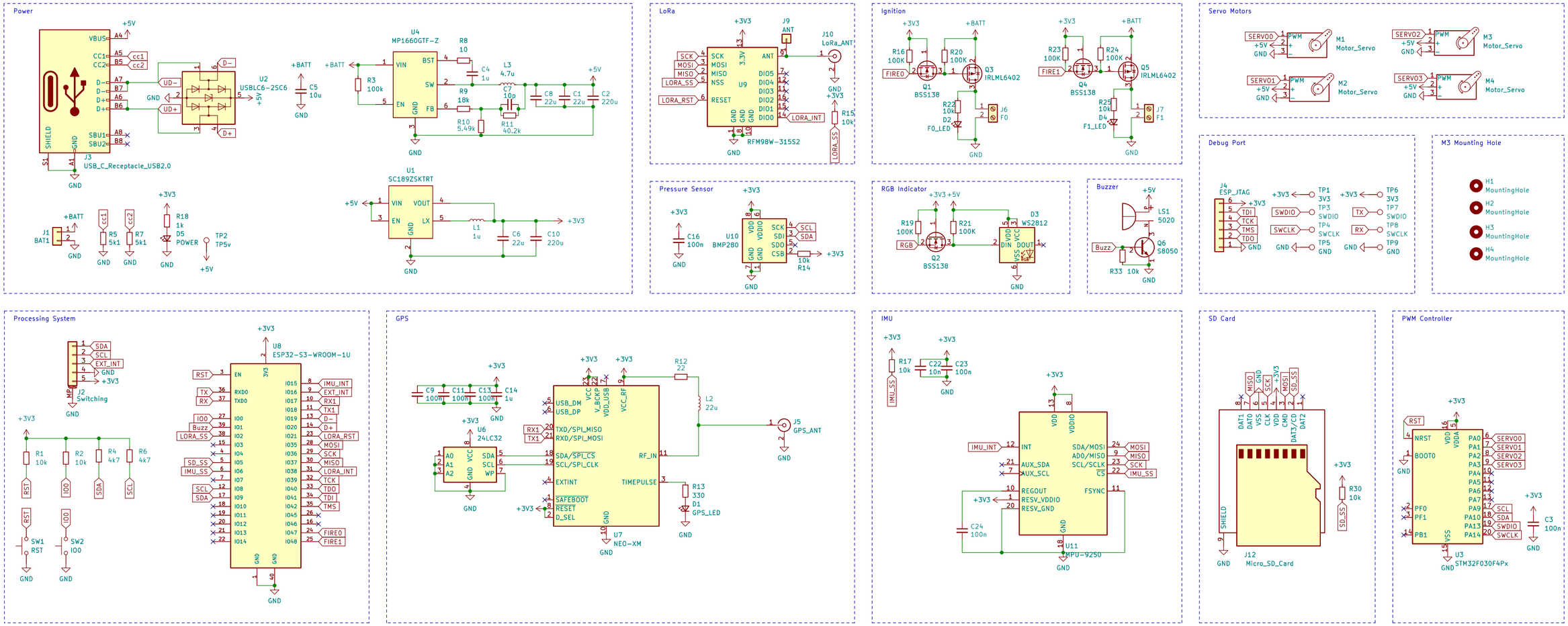

NCKU ISP

Sheet: /

File: isp32.kicad_sch

Title: ISP32

Size: User	Date: 2023-01-05	Rev: v0.0.1
KiCad E.D.A. kicad (6.0.10-0)		Id: 1/1