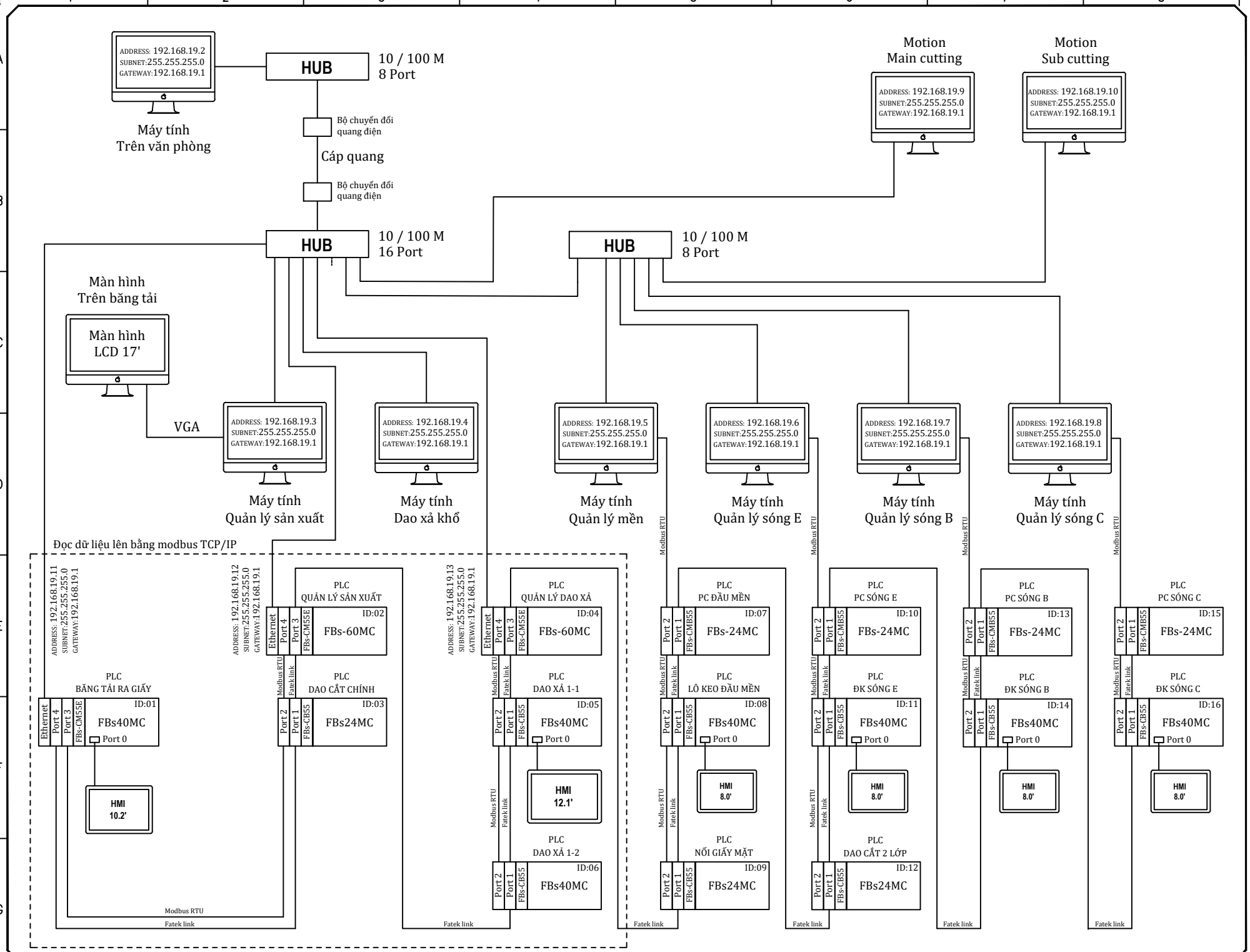

CÔNG TY TNHH TỰ ĐỘNG HÓA
TRƯỜNG LƯU
Đ/C: 745/228 Quang Trung, P.12, Q. Gò Vấp, TP.HCM
Điện Thoại: 0976.720.931

NO.	DATE	REVISION	BY

DWG TITLE

JOB NAME: Machine CNC
JOB LOCAL: HCM City
JOB TYPE: Electricbox CNC

ENGINEER: Mr. Viet	CHECKED BY: Mr. Khanh
JOB NO: 2021.17	DRAWN BY: Mr. Viet
SCALE: 1:1	DATE: 3/7/2021

DWG NAME: Wiring

SHEET NO: 4 OF 5

LOCAL STORE CAD DWG FILE: E:\Truong Luu Customer\DK-Tech\CNC Machine\Electric Drawings\CNC Millings\Page_04_Wirings.dwg